STATE OF LOUISIANA
DEPARTMENT OF TRANSPORTATION AND DEVELOPMENT
TECHNICAL SPECIFICATIONS FOR

TRUCK, CAB & CHASSIS, 19,500# GVWR WITH SIGN SERVICE BODY

SERIES NO. 149-500 **REV. 11/20/2026**
EQUIPMENT SPECIFICATION 149-500G

GENERAL

This specification sets forth the minimum requirements for a 2wd 2-door class 5 truck (19,500# GVWR) outfitted with a sign service body.

Equipment shall be new, a production model of current manufacture, and must meet all state and Federal safety and emission standards in effect at time of order.

REPRESENTATIVE SPECIFICATIONS

A Ford F550 cab & chassis with a DuTec 004634S sign service body, with appropriate options and standard features, was used to develop these specifications and establish equivalency evaluation criteria.

Equipment of similar style, type, character, quality, features, and purpose conforming to the following detailed requirements/specifications will be considered. For evaluation purposes, bidder's proposing an exception/equivalent option/feature to those specified herein, may be required to provide manufacturer/product information (catalogue sheets, detailed specifications, pictures, etc.). This information will be evaluated against the minimum requirements of this specification. Proposed submittals that are determined not to be equivalent to the established criteria will be rejected.

LOUISIANA AUTHORIZED DEALER(S)

Proposed item(s) must be from a manufacturer who has at least one (1) authorized dealer or multiple field service technicians that are domiciled **within the State of Louisiana** where parts and service can be obtained. Authorized dealer(s) must have properly trained technicians plus all other resources necessary to perform warranty and repair services in complete accordance with the manufacturer's requirements. A letter certifying the ability to meet this requirement, inclusive of the company name(s) and address(es) of the Louisiana authorized dealer(s), shall be supplied with the bid submittal and may be required prior to award.

DELIVERY & ACCEPTANCE

Vendor shall perform a test run of each unit to verify that all features and capabilities are operating properly at time of delivery. Documentation of testing may be required prior to acceptance by the Department.

Unit(s) must be delivered completely assembled (including all components, accessories, etc.) and ready for operation without any additional preparation including, but not limited to, ensuring all fluid levels are at their full mark, fuel tank(s) is full, all necessary lubrication has been performed, etc. A Louisiana safety inspection shall be performed on each vehicle prior to delivery and a Louisiana safety inspection sticker properly affixed.

Any unit delivered under this specification is subject to rejection if there is evidence of poor workmanship, by either the vendor or the original manufacturer. Noted defects and/or nonconformance findings may be corrected by the vendor. Corrections must be completed and approved by the Equipment Engineer or his representative prior to final acceptance.

Unit(s) shall be delivered "**on the ground**;" DOTD will not unload nor provide any unloading equipment to the vendor/delivery driver in order to offload the unit(s).

NOTE: The Department will have space available for equipment to be unloaded.

EACH UNIT MUST BE SUPPLIED WITH THE FOLLOWING DOCUMENTATION:

1. Notarized Bill of Sale
2. Certificate of Origin (MSO)
3. Dealer's Service Policy
4. Owner's/Operator's Manual(s)
    a. One (1) Hardcopy
    b. One (1) Digital Copy
        i. Acceptable Formats: PDF delivered via USB "Flash Drive", or E-mail
5. Service Manual(s)
    a. One (1) Hardcopy
    b. One (1) Digital Copy
        i. Acceptable Formats: PDF delivered via USB "Flash Drive", or E-mail
6. Build Sheet(s) – as applicable
    a. One (1) Hardcopy
    b. Build sheets shall be written in plain language (not company specific codes) and include, at a minimum, all standard & optional features of the delivered unit.

NOTE: Invoices will not be processed for payment until the unit(s) have been inspected by the Equipment Engineer or their representative and deemed in compliance with the specifications.

BID SUBMITTALS

Any additions, deletions, or variations from the specifications shall be noted in the "Bidder's Exceptions" page of this specification. Exceptions that are noted to be less than a minimum requirement will not be accepted.

Any additions, deletions or variations from the manufacturer's standard published specifications shall be noted on the "Bidder's Exceptions" page of this specification. Unless otherwise noted, any items appearing in the manufacturer's standard published specifications furnished by the Bidder are assumed to be included in the Bidder's submittal.

Bidder shall note on their submittal any installation(s) to the equipment that will be performed by the vendor instead of the manufacturer.

Failure to note any specification exceptions, manufacturer specification alterations, and/or vendor installations prior to award may result in rejection of the equipment at the time of delivery.

THE NUMBER OF DELIVERY DAYS AFTER RECEIPT OF ORDER (ARO) MAY BE USED AS A FACTOR IN THE AWARD.

EQUIPMENT SPECIFICATIONS

NOTICE TO BIDDERS

Bidder shall review the detailed "Equipment Specification" completely and respond to the compliance question at the end of each section by marking "X", in the space provided, for "Yes" or "No". Mark "Yes" to indicate that the equipment bid meets the section exactly as specified. Mark "No" if there are exceptions to any part of that section. Exceptions/deviations to any part of the specification are to be detailed on the "Bidder's Exceptions" page of this specification.

IN ORDER TO BE CONSIDERED FOR AWARD, BIDDER SHALL RETURN THIS SPECIFICATION, COMPLETED IN FULL, WITH THEIR BID SUBMITTAL.

Note: All Values listed below are minimums unless noted otherwise.

1. Cab & Chassis

1.1. GVWR: 18,500 lbs. to 19,500 lbs. (Note: Truck must be a class 5 and GVWR must be within range listed)

Comply: ____Yes ____No

1.2. Frame: 600,000 RBM (Resisting Bending Moment) - Bidder shall list section modulus and yield strength below

Section Modulus: _____ Yield Strength: _____

Comply: ____Yes ____No

1.3. Cab to axle (CA) and axle to end of frame (AF)
- **1.3.1.** CA: 84"
- **1.3.2.** AF: 47"

Comply: ____Yes ____No

1.4. All steel front bumper and 2 frame mounted tow hooks

Comply: ____Yes ____No

1.5. Cab
- **1.5.1.** Conventional 2-door cab
- **1.5.2.** Tinted safety glass
- **1.5.3.** Outside mirrors, driver & passenger side
  - **1.5.3.1.** Power adjustable
  - **1.5.3.2.** Heated
  - **1.5.3.3.** Convex spot mirrors
- **1.5.4.** Manufacturer's highest level sound insulation package
- **1.5.5.** 40/20/40 vinyl split bench seat with fold down center console/arm rest
- **1.5.6.** Gauge package including the following:
  - **1.5.6.1.** Coolant temperature

EQUIPMENT SPECIFICATIONS

1.5.6.2. Fuel
1.5.6.3. Oil pressure
1.5.6.4. Speedometer
1.5.6.5. Tachometer
1.5.6.6. Gear indicator
1.5.6.7. Odometer
1.5.6.8. Trip odometer

1.5.7. Dual sun visors
1.5.8. Two (2) cup holders, mounted in dash or center console
1.5.9. Climate control, including air conditioning, heater, & defroster
1.5.10. Power windows & power door locks
1.5.11. Tilting and telescoping steering wheel
1.5.12. Driver and passenger airbags
1.5.13. Running boards/cab entry steps

Comply: ____Yes ____No

1.6. Engine & Fuel
1.6.1. Gasoline, liquid cooled
1.6.2. Fuel tank minimum 40-gallon capacity

Comply: ____Yes ____No

1.7. Transmission: Automatic, filled with manufacturer-approved synthetic lubricants

Comply: ____Yes ____No

1.8. Front Axle
1.8.1. 7,000 lbs. GAWR @ ground capacity
1.8.2. Shock absorbers
1.8.3. Integral power steering

Comply: ____Yes ____No

1.9. Rear Axle
1.9.1. 13,500 lbs. GAWR @ ground capacity
1.9.2. Shock absorbers
1.9.3. Limited slip or locking differential

Comply: ____Yes ____No

1.10. Brakes
1.10.1. Power assist 4-wheel disc brakes with ABS

Comply: ____Yes ____No

EQUIPMENT SPECIFICATIONS

1.11. Wheels & Tires
- **1.11.1.** 19.5” steel wheels, 10 bolt
- **1.11.2.** First line, first quality tires
  - **1.11.2.1.** Front – 225/70R19.5, single highway tread
  - **1.11.2.2.** Rear – 225/70R19.5, dual on/off road tread
- **1.11.3.** Combined load ratings must to be compatible with axle ratings and GVWR

Comply: ____Yes ____No

1.12. Chassis Electrical System & Lights
- **1.12.1.** 12-volt system
- **1.12.2.** Dual alternators, 350 amps
- **1.12.3.** Dual batteries (if offered by manufacturer with chosen engine)
- **1.12.4.** Four (4) dash or overhead mounted, factory installed, body circuit switches (upfitter switches) for simple on/off functions for accessories (warning lights, etc.; one (1) assigned to operate the flashing warning lights; one (1) assigned to enable the convenience lighting circuits, and two (2) blank to be assigned by DOTD personnel.
- **1.12.5.** Headlights:
  - **1.12.5.1.** Automatic daytime running lights
  - **1.12.5.2.** Automatic on with low ambient light levels
  - **1.12.5.3.** Warning buzzer/alarm when headlight switch is on and ignition switch is in off position
- **1.12.6.** Roof mounted clearance marker lights
- **1.12.7.** Cruise control
- **1.12.8.** Intermittent windshield wipers with washers
- **1.12.9.** Self-cancelling directional signals
- **1.12.10.** Backup alarm, 97 dba
- **1.12.11.** Backup camera
- **1.12.12.** AM/FM radio, Bluetooth/hands free function and steering wheel controls
- **1.12.13.** 110V power outlet
- **1.12.14.** Two (2) 12V accessory power outlets with covers, mounted in dash (for cell phone chargers, GPS devices, etc.). One (1) 12V power outlet and one (1) USB charging outlet will also satisfy this requirement.
- **1.12.15.** Factory trailer brake controller

Comply: ____Yes ____No

1.13. Paint: Manufacturer’s standard; white for cab, black for chassis

Comply: ____Yes ____No

1.14. FMCSA/DOT Mandated Safety Items
- **1.14.1.** One (1) UL listed, 5 B:C rated, or higher, fire extinguisher securely mounted in cab
- **1.14.2.** One (1) set of three (3) bidirectional reflective triangles conforming to FMVSS No. 125
- **1.14.3.** At least one (1) spare fuse for each type/size used in the truck

Comply: ____Yes ____No

EQUIPMENT SPECIFICATIONS

2. Attached Equipment – Sign Service Body

2.1. General

2.1.1. DuTec 004634S sign body (or equal)

2.1.2. Refer to additional details & DuTec drawings below

2.1.3. The truck and attached equipment manufacturers must mutually resolve any unexpected truck/attached equipment component conflict with a sound and functional solution as a requirement of this specification.

Comply: ____Yes ____No

2.2. Dimensions

2.2.1. Length: 133”, plus step bumper

2.2.2. Width: 93.5”, plus doors (95.8” overall)

2.2.3. Height:

2.2.3.1. Front Curb Side: 68”, Rear Curb Side: 43”

2.2.3.2. Front Street Side: 43”, Rear: 43”

Comply: ____Yes ____No

2.3. Compartments – General

2.3.1. Doors – Constructed of 12-gauge galvaneal formed outer panel and a 16-gauge galvaneal formed inner panel with a die formed channel and a polypropylene core

2.3.2. Door Seals – 360 degree formed drain channel with an automotive style bulb rubber seal

2.3.3. Door Hinges

2.3.3.1. Stainless steel barrel style hinges with a 5/16” pin and grease fittings

2.3.4. All vertical doors shall have spring assist door checks

2.3.5. Door Locks – Stainless steel t-handle twist locks, all keyed alike

2.3.6. Master Lock – A spring-loaded master lock is to be provided for each side pack allowing each side pack to be locked with a single protected padlock

2.3.7. Drawers

2.3.7.1. All drawers and shelves are constructed with 14-gauge galvanized material

2.3.7.2. Drawers are mounted on slides with a 300 lb. dynamic load rating per pair

2.3.7.3. Drawer units automatically lock in the open and closed position

Comply: ____Yes ____No

2.4. Compartmentation

2.4.1. Curbside - (per drawing 004634S D)

2.4.1.1. A: 10-slot 24” x 48” sign storage

2.4.1.2. B: 26-slot 36” x 36” sign storage

2.4.1.3. C: 10-slot 30” x 30” sign storage

2.4.1.4. D: 24-slot 24” x 24” sign storage

2.4.1.5. E: 10-slot 12” x 36” sign storage

2.4.1.6. 1: Qty. 3 – 3.5” Drawers with 20” slides

2.4.1.7. 2: Qty. 3 – Adjustable divider shelves

2.4.1.8. 3: Qty. 3 – 3.5” Drawers with 24” slides

2.4.1.9. 4: Post driver/post puller storage compartment

Comply: ____Yes ____No

EQUIPMENT SPECIFICATIONS

2.4.2. Streetside (per drawing 004634S B)
- **2.4.2.1.** Compartment # 1
  - **2.4.2.1.1.** Qty. 5 – 3.5” drawers with slides
  - **2.4.2.1.2.** Qty. 1 – 7.75” drawer with slides
- **2.4.2.2.** Compartment # 2
  - **2.4.2.2.1.** Qty. 3 – Adjustable divider shelves
- **2.4.2.3.** Compartment # 3
  - **2.4.2.3.1.** Qty. 2 – 3.5” Drawers with slides
- **2.4.2.4.** Compartment # 4
  - **2.4.2.4.1.** Qty. 3 – Adjustable divider shelves

Comply: ____Yes ____No

2.5. Body Installation
- **2.5.1.** A sill spacer is not required; however, a rubber or plastic (nylon or Delrin) sill spacer is allowed between the frame & body sills. WOOD SPACERS ARE NOT ALLOWED!
- **2.5.2.** Body shall be bolted to frame using brackets or fishplates. U-BOLTS ARE NOT ALLOWED!
  - **2.5.2.1.** Upfitter shall utilize chassis manufacturer’s guidance for body mounting methods
- **2.5.3.** Brackets

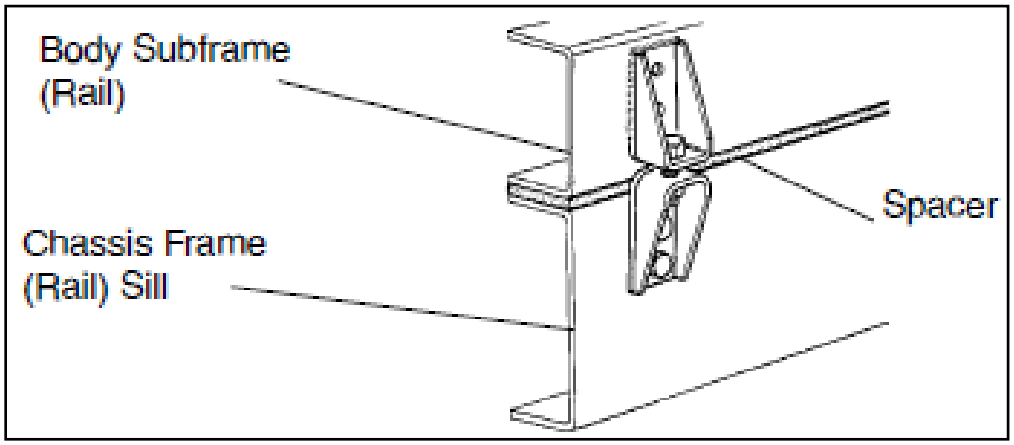

Figure 1 Brackets connecting body with chassis and spacer in between.

EQUIPMENT SPECIFICATIONS

2.5.4. Fishplate - to be bolted to chassis frame, utilizing existing holes where possible, and bolted or welded to body sub-frame/sill.

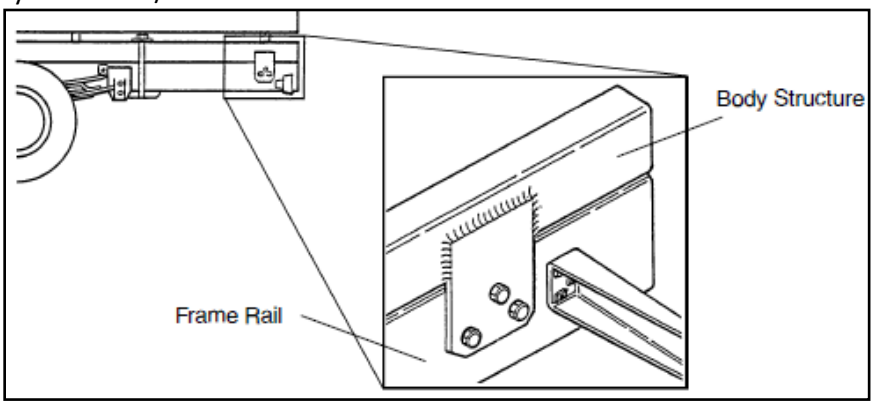

Figure 2 Example of how to attach fishplate.

Comply: ____Yes ____No

2.6. Body Construction
- **2.6.1.** Base Body
  - **2.6.1.1.** Constructed of 10 and 12-gauge steel
  - **2.6.1.2.** All exterior seams continuously welded
- **2.6.2.** Floor
  - **2.6.2.1.** Floor sheet – 1/8” tread plate 44.5” wide
  - **2.6.2.2.** This floor is 7” above the sub floor with 2” deck support framework, creating a lower compartment for sign post storage
- **2.6.3.** Subfloor
  - **2.6.3.1.** 10-gauge steel with drain holes at front and rear of compartment
- **2.6.4.** Four (4) cargo tie downs in floor at corners of cargo area
- **2.6.5.** Cross Members
  - **2.6.5.1.** Front and intermediates, 3/16” HR plate, die formed
  - **2.6.5.2.** Rear cross member - 1/4” plate, die formed
- **2.6.6.** Tailgate
  - **2.6.6.1.** Closes off post bin storage area and extends 10” above deck level

Comply: ____Yes ____No

2.7. Bumper
- **2.7.1.** 14” HD step bumper constructed with 1/8” tread plate and 4” structural channel frame supports
- **2.7.2.** 2” Class 5 square receiver hitch and safety chain hooks (weld-on d-rings)
- **2.7.3.** Combination 7-pole round & 4-pole flat trailer lighting connector with weather-resistant covers

Comply: ____Yes ____No

EQUIPMENT SPECIFICATIONS

2.8. Mud Flaps
- **2.8.1.** Heavy duty 3/8" rubber rear wheel mud flaps with full width steel angle sandwich type mounting brackets (plastic flaps not acceptable)

Comply: ____Yes ____No

2.9. Body Prep. & Paint
- **2.9.1.** Remove all weld spatter and slag, round sharp corners, grind sharp edges, buff all surfaces
- **2.9.2.** Prepare all metal surfaces (under structure and body) per paint manufacturer's requirements
- **2.9.3.** Prime all metal surfaces with PPG EPX Series high solids epoxy primer compatible with finish coat or equal. Primer to be 3-4 mils DFT.
- **2.9.4.** Apply finish coat of PPG Delfleet Essential polyurethane topcoat (or PPG Concept (DCC) Acrylic Urethane) or equal.
- **2.9.5.** Bed color to match cab
- **2.9.6.** Underbody color to be painted black
- **2.9.7.** Finish coat to be 4 mils DFT
- **2.9.8.** Apply all coatings in strict accordance with manufacturer's recommendations
- **2.9.9.** Note: Paint will be tested with a 7-mil magnet when it arrives at DOTD. If the paint is not in compliance it will be rejected.

Comply: ____Yes ____No

3. Warning Lights, Wiring and High Visibility Conspicuity Tape

3.1. General
- **3.1.1.** Refer to lighting layout illustration and DuTec drawings below
- **3.1.2.** Truck must be delivered with warning lights & high visibility reflective conspicuity tape installed in accordance with the below specifications and layout
- **3.1.3.** All warning lights to be sealed light emitting diode (LED) type, with plug-in connectors
- **3.1.4.** 6" oval lights and round clearance marker lights must be grommet mounted, with the exception of the upper side marker lights which are protected by location but not mounted in rubber grommets
- **3.1.5.** Warning lights shall be installed by an upfitter who is experienced in and regularly engages in the installation of automotive electronics & warning lights
- **3.1.6.** Installer shall use vehicle & lighting manufacturers' guidance along with industry best practices and techniques to ensure that lights are installed in a safe and neat manner
- **3.1.7.** All wiring and cables shall be color coded, heat shrink wrapped and logically routed, secured, and protected with convoluted loom where possible
- **3.1.8.** All wiring splices must be made using butt or parallel crimp connectors
- **3.1.9.** Non-metallic/rubber grommets shall be used where wires and cables penetrate any cab panels, body panels, or chassis structure
- **3.1.10.** All cab and body penetrations shall be adequately sealed to prevent water from entering
- **3.1.11.** All warning lights to be controlled by a single in-cab, dash-mounted upfitter switch. The switch must be labeled to read "Warning Lights"
- **3.1.12.** Installer shall contact DOTD Equipment Section prior to programming to confirm intended flash pattern(s)
- **3.1.13.** All lighting must meet Federal and state requirements

EQUIPMENT SPECIFICATIONS

Comply: ____Yes ____No

3.2. Mid-size & Mini Light Bars
- **3.2.1.** SoundOff Signal nRoads Mini/Mid-Size or equal satisfying the following requirements
- **3.2.2.** Three (3) mid-size (24”) light bars & one (1) mini (17”) light bar shall be installed in the locations shown below
- **3.2.3.** Lengths are nominal and +/- 1” is acceptable
- **3.2.4.** Dual color - 12 diodes per module (equal number of green & amber
  - **3.2.4.1.** All diode positions must be capable of displaying both colors
- **3.2.5.** Flash pattern capable of alternating between an asymmetric, low-frequency, “wig-wag” pattern and a low-frequency double or quad flash.
- **3.2.6.** UV resistant clear polycarbonate lens
- **3.2.7.** 10-16 VDC
- **3.2.8.** Light bars shall meet all applicable federal/state laws and regulations
- **3.2.9.** Shall be SAE J845 360-degree Class 1 certified

Comply: ____Yes ____No

3.3. Perimeter Lights
- **3.3.1.** Brooking Industries XT12D (or ST6D) perimeter lighthead or equal satisfying the following requirements
- **3.3.2.** Size: Length: 4.25-5.25 in., Width: 1.0-2.0 in., Height: 0.3-0.4 inches
- **3.3.3.** 12-24 VDC
- **3.3.4.** UV resistant clear polycarbonate lens, black bezel trim
- **3.3.5.** 12 diodes - dual color - (equal number of green & amber)
- **3.3.6.** Lighthead shall be capable of displaying each color across full length
- **3.3.7.** Capable of alternating between an asymmetric, low-frequency, “wig-wag” pattern and a low-frequency double or quad flash

EQUIPMENT SPECIFICATIONS

3.3.8. Lighthead shall meet all applicable federal/state laws and regulations
3.3.9. Shall be SAE J595 Class 1 certified

Comply: ____Yes ____No

3.4. Oval Light
3.4.1. 6" L x 2¼" W , recessed, grommet, snap-in mount
3.4.2. Polycarbonate lens
3.4.3. Dual color – half amber, half green
3.4.4. Capable of double or quad flash pattern
3.4.5. 12-24 VDC, with plug-in connector
3.4.6. Shall be SAE J595 Class 2 certified

Comply: ____Yes ____No

3.5. High Visibility Reflective Tape
3.5.1. DOT C2 approved high visibility reflective conspicuity tape, 2" wide, with alternating 6" segments of red and white, shall be placed above the rear wheels as shown below
3.5.2. High visibility reflective conspicuity tape, 2" wide, with alternating 6" segments of green and high visibility yellow, shall be placed on the rear of the body as shown below

Comply: ____Yes ____No

EQUIPMENT SPECIFICATIONS

3.6. Warning Light & Striping Layout

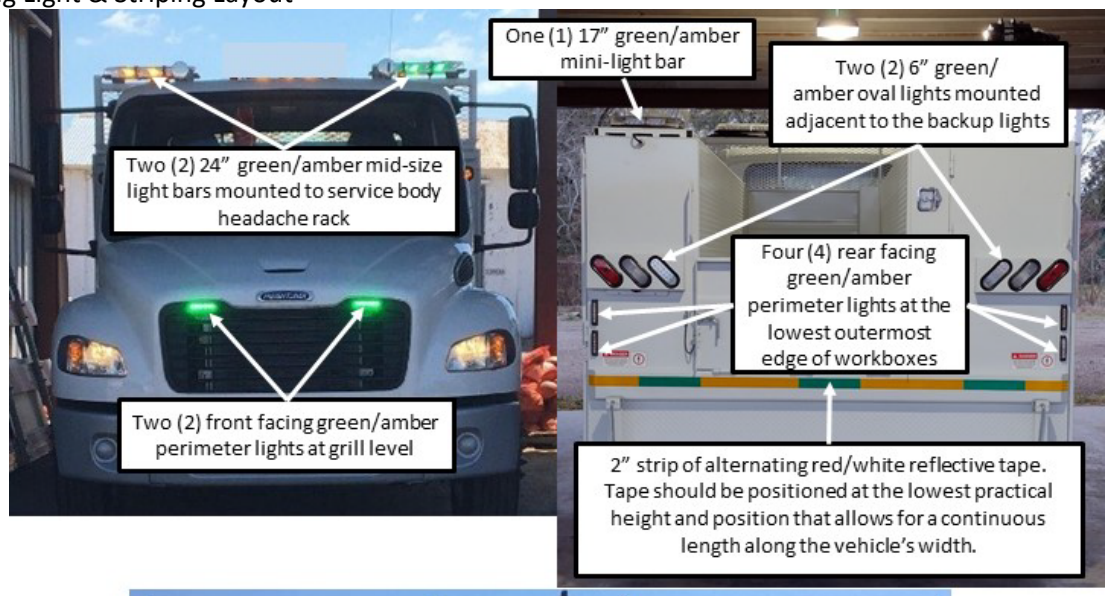

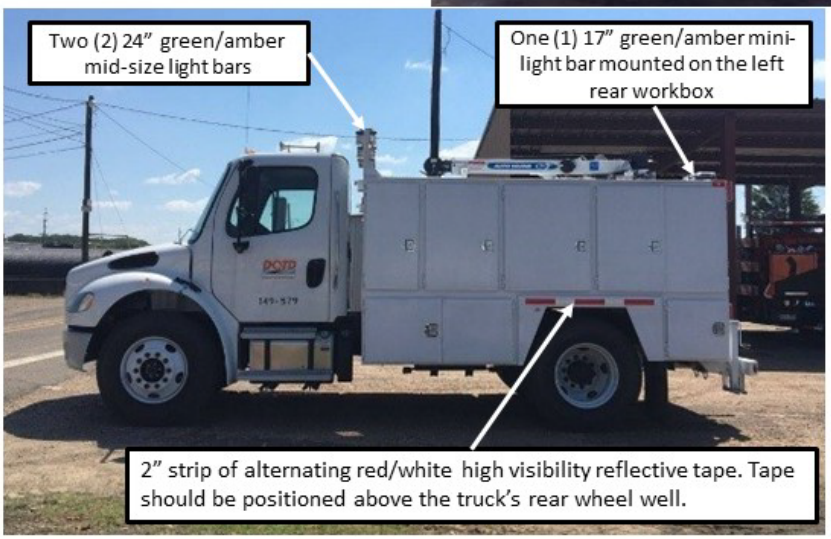

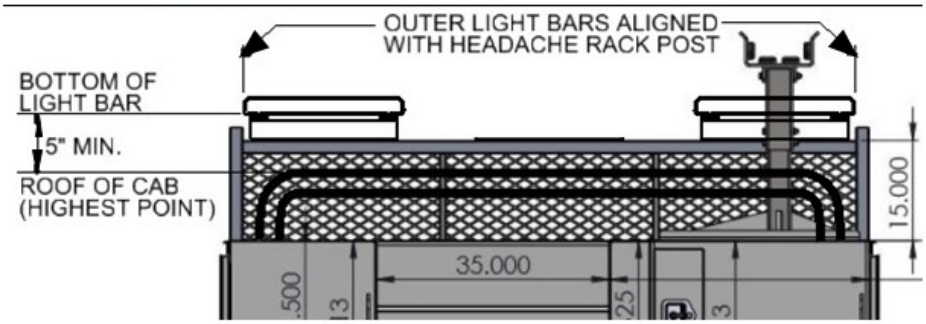

Comply: ____Yes ____No

EQUIPMENT SPECIFICATIONS

4.

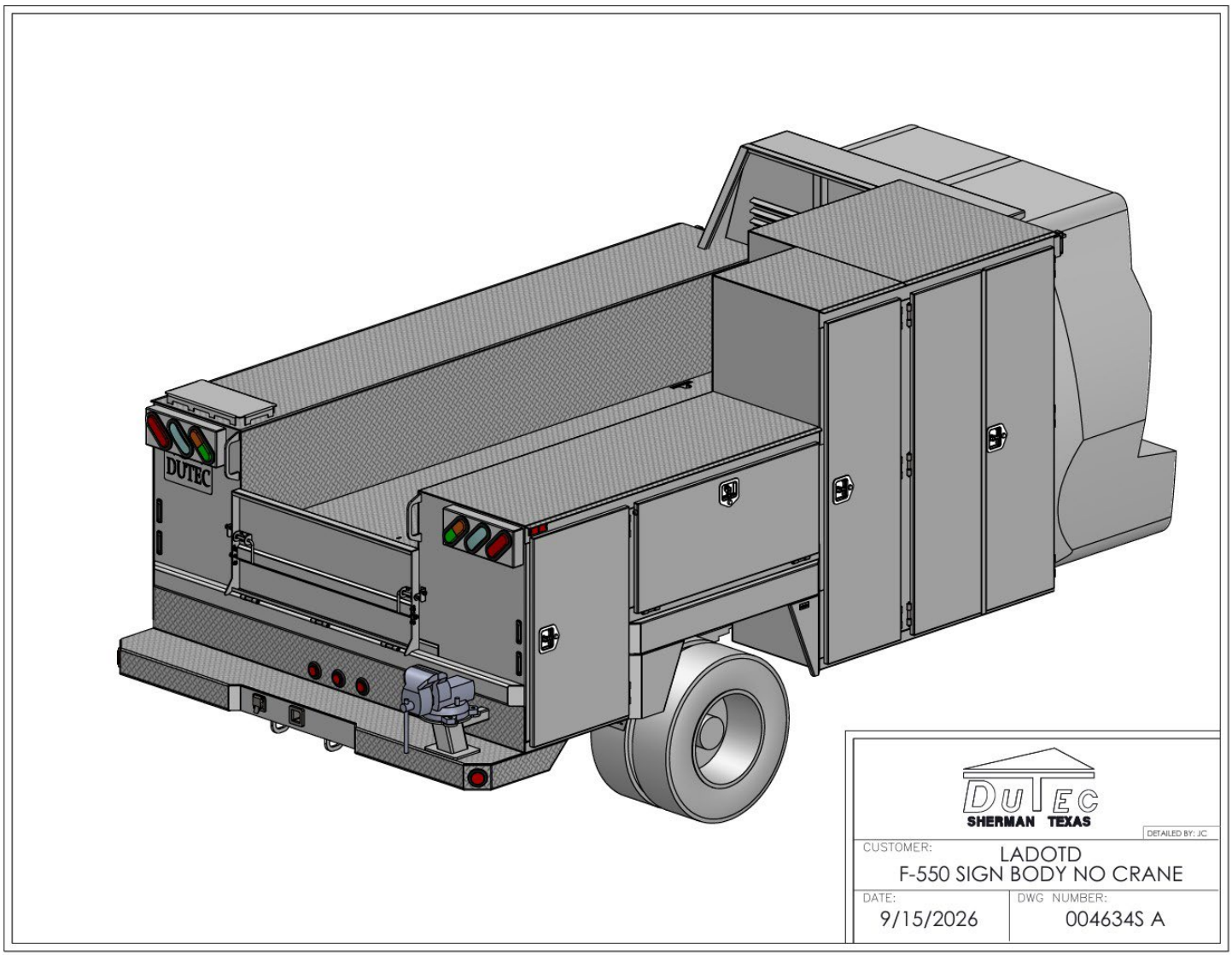

Figure 3 General assembly drawing of utility truck bed.

EQUIPMENT SPECIFICATIONS

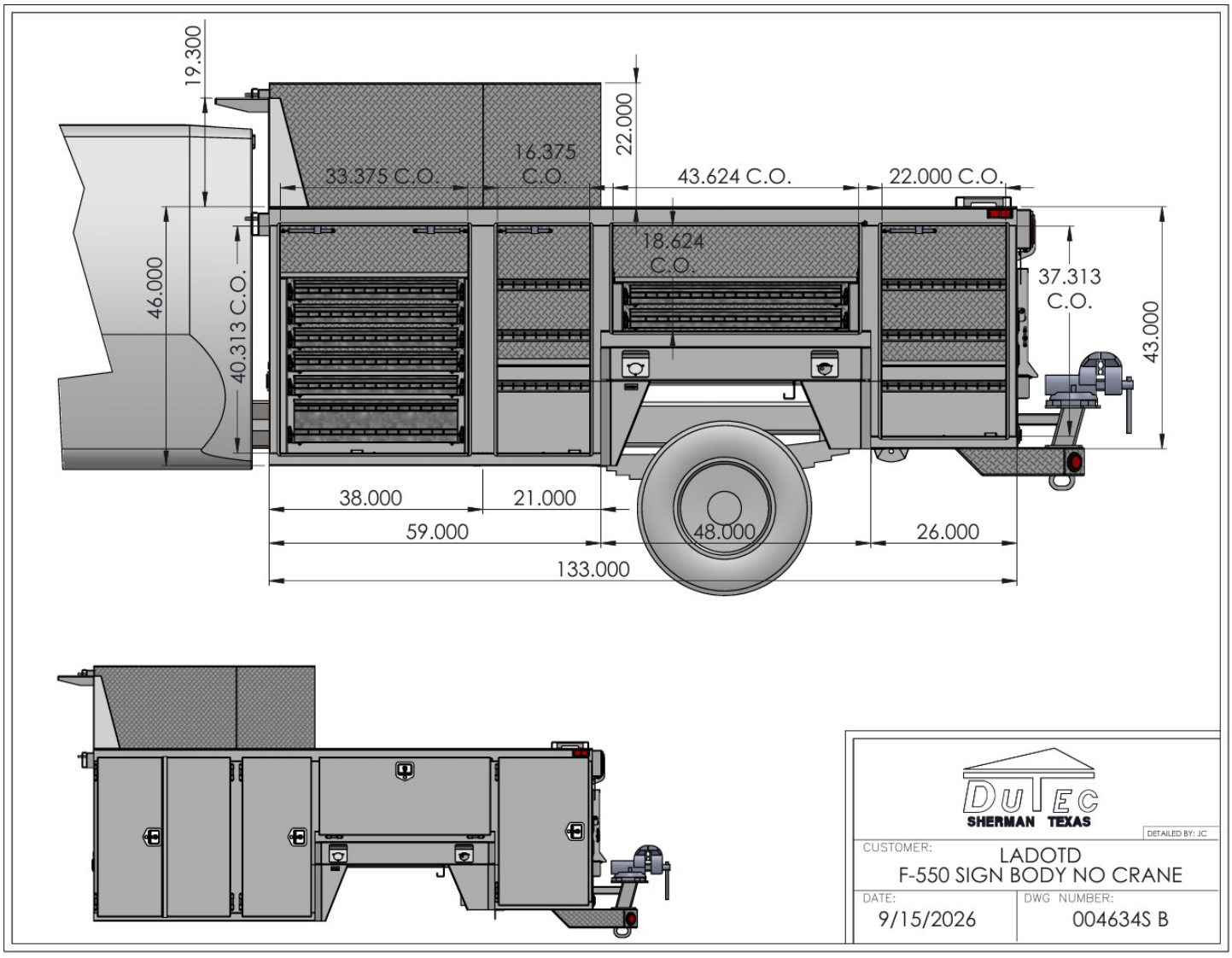

Figure 4 General assembly driver side view drawing with measurements in accordance with specs.

EQUIPMENT SPECIFICATIONS

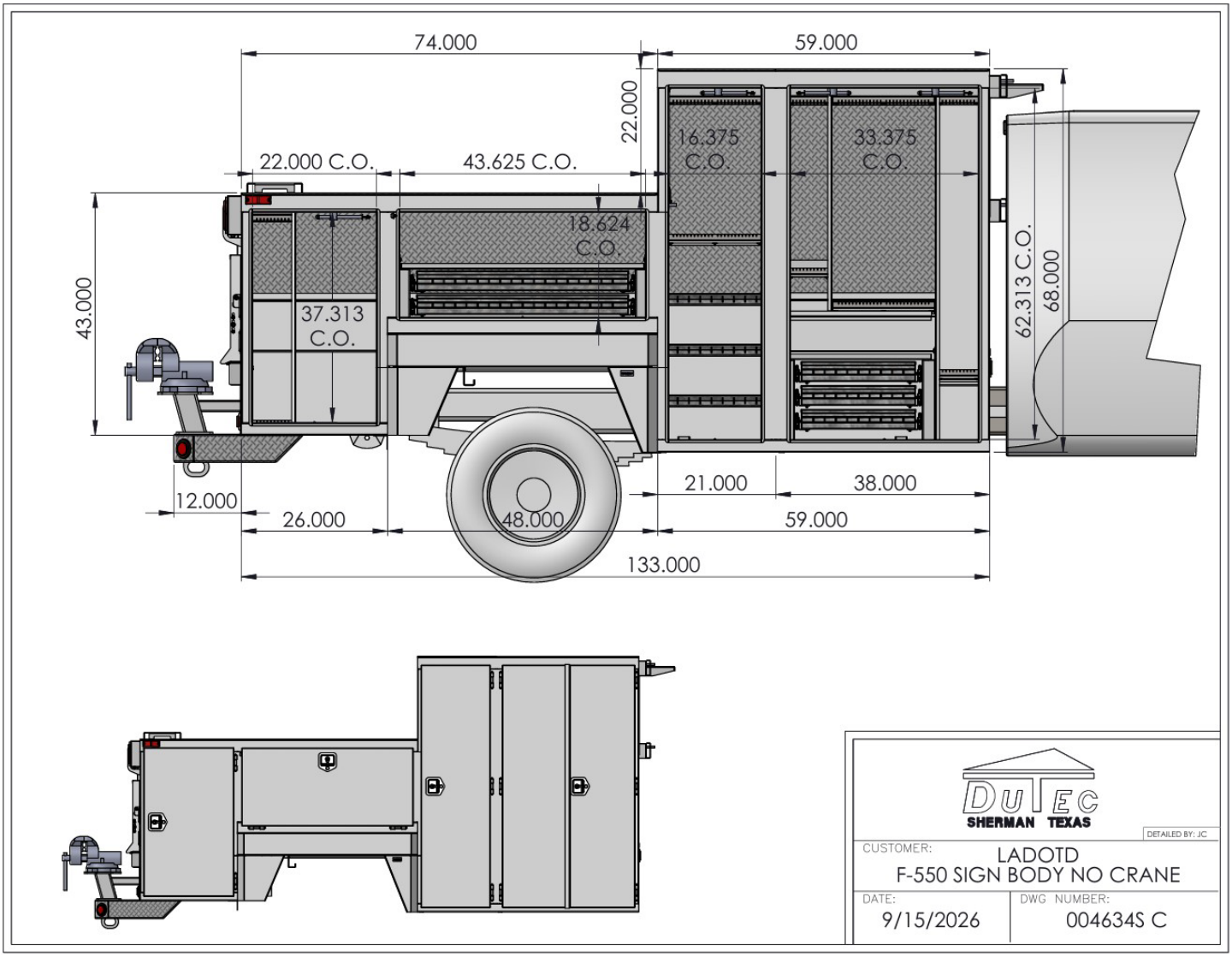

Figure 5 General assembly passenger side view drawing with measurements in accordance with specs.

EQUIPMENT SPECIFICATIONS

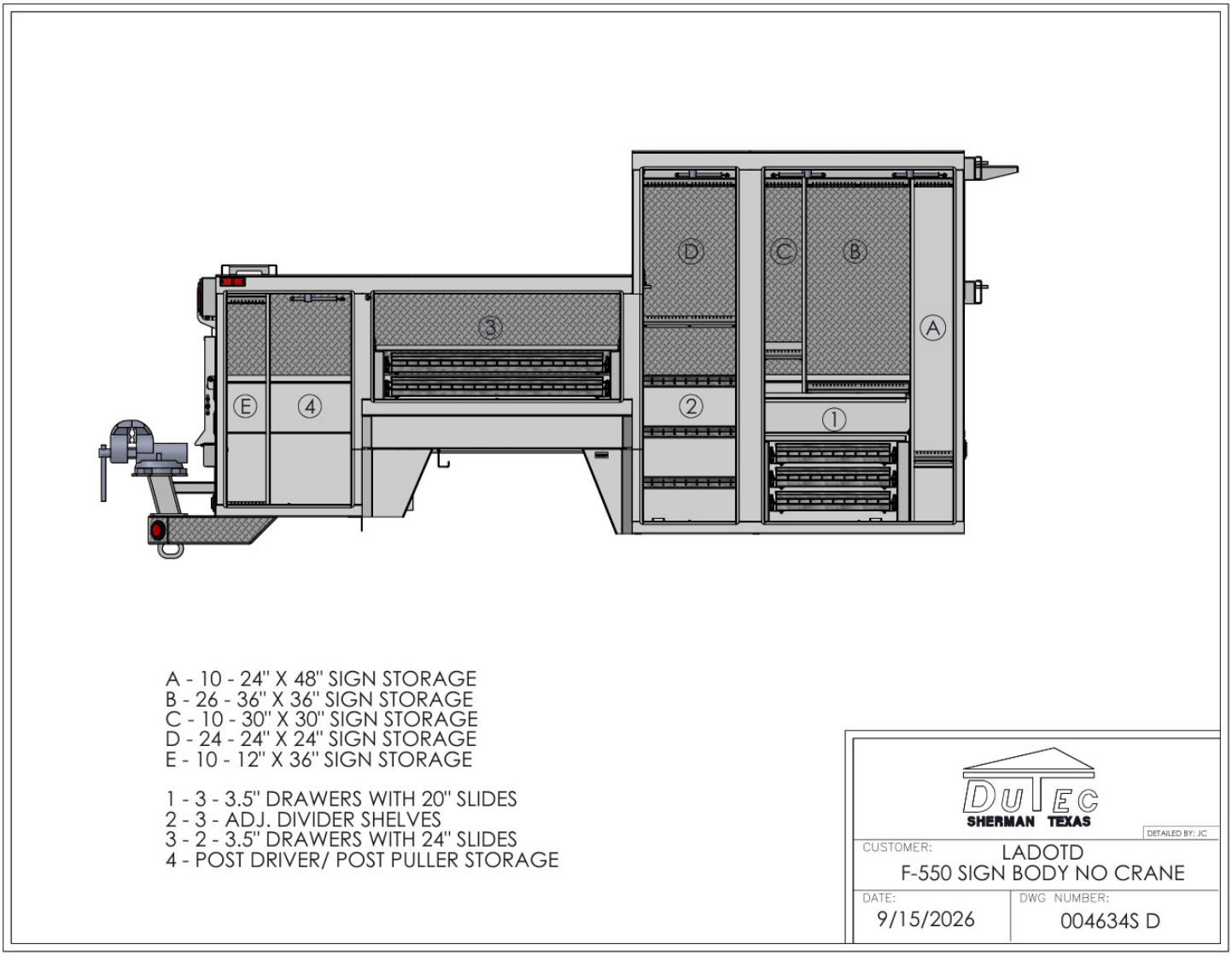

Figure 6 Utility bed side view drawing with compartment callouts.

EQUIPMENT SPECIFICATIONS

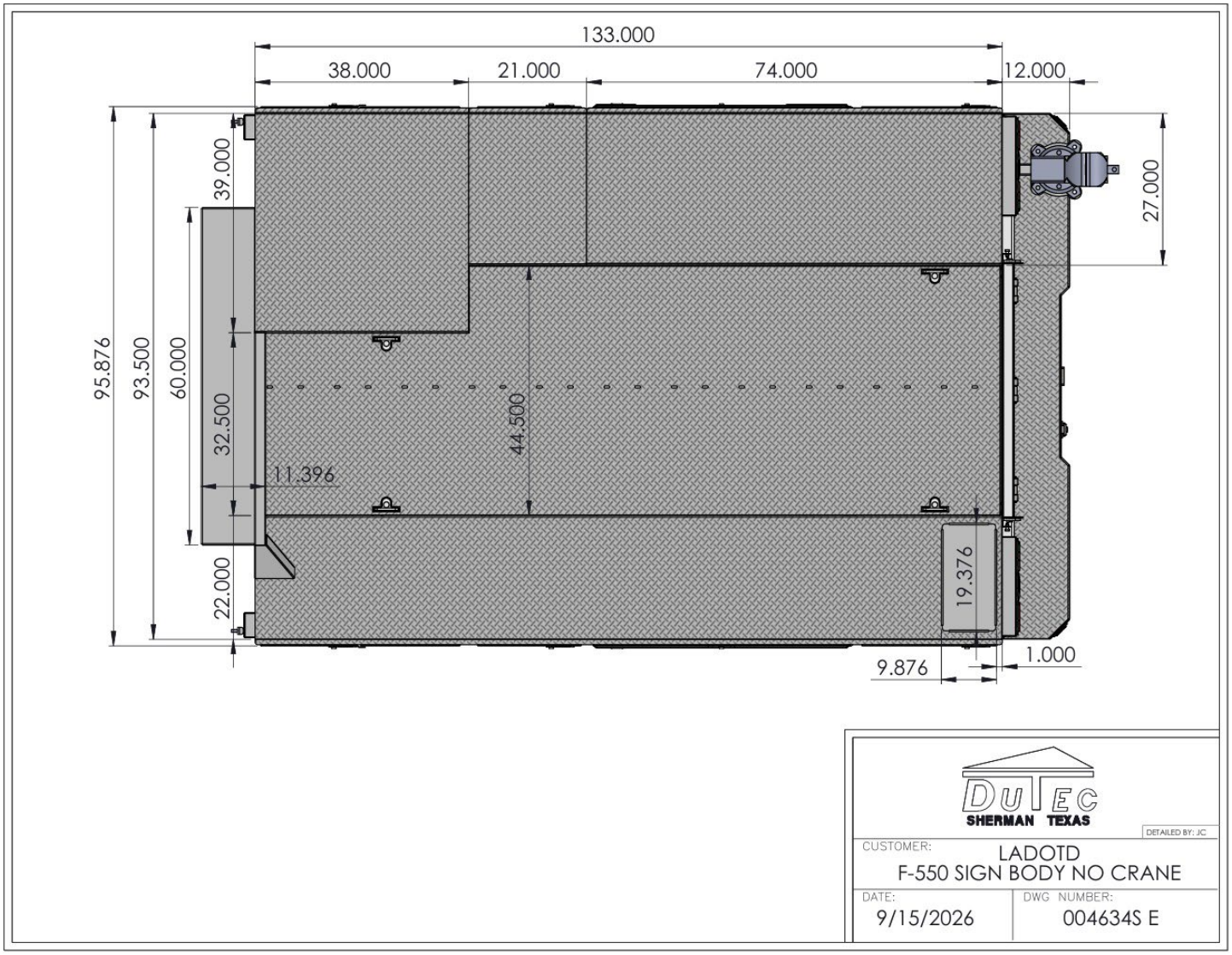

Figure 7 Overhead drawing of utility bed with measurements and dimensions in accordance with specs.

EQUIPMENT SPECIFICATIONS

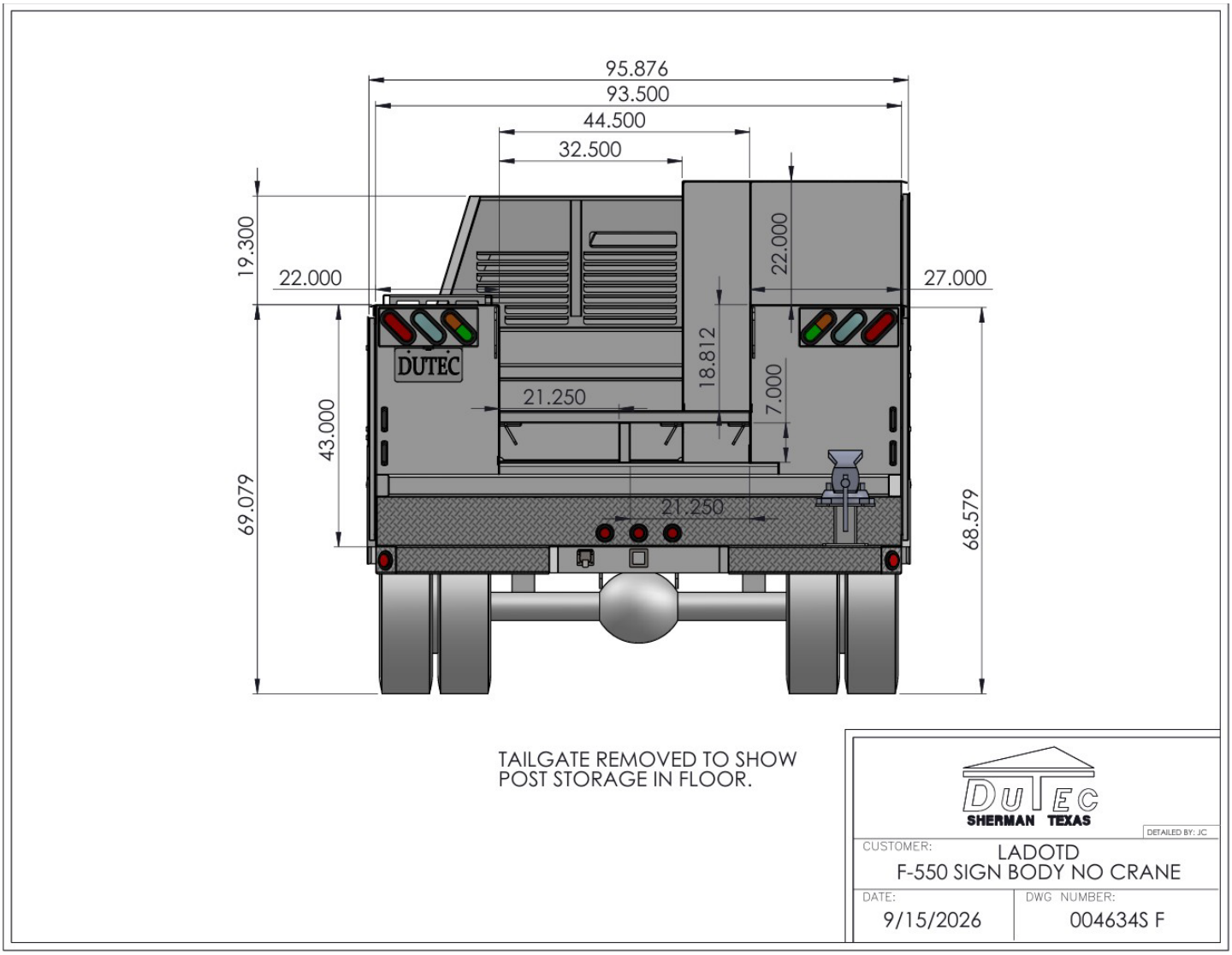

Figure 8 Rear view drawing of utility bed with dimensions and measurements in accordance with spec.

LOUISIANA DEPARTMENT OF TRANSPORTATION & DEVELOPMENT

EQ. SPEC. **149-500G**
REV. **11/20/2026**

BIDDER'S EXCEPTIONS

Instructions: Bidder shall note all exceptions in space provided below. List the detail number from the aforementioned specification in the column to the left and the exception in the column to the right. Responses may be typed or hand-written. Handwritten responses must be legible. If additional space is needed, please print a duplicate copy of this sheet. "Bidder's Exceptions" page(s) shall be returned with the bid submittal.

Examples:

1.6	Engine has 325 horsepower
1.18.3	Batteries have 2000 CCA combined.
2.2.8	Crossmembers are 4" channel on 12" centers.

Spec./Detail Reference	**Exception**