CATS
CAPITAL AREA TRANSIT SYSTEM
Connecting you to what matters.

ADDENDUM #1

AUGUST 18, 2026

ADA ACCESSIBLE BUS STOP IMPROVEMENT PROJECT

Solicitation # 2026-ADAbuspads-003

ITB DUE DATE
10:00AM (CDT) – AUGUST 28, 2026

The Capital Area Transit System (CATS), Baton Rouge, Louisiana hereby amends the above referenced Invitation to Bid (ITB) as follows:

1. **Addendum to provide response to vendor questions.**

2. **Addendum to provide Sign in Sheet from mandatory Pre-bid and Site visit.**

3. **Addendum to provide changes, deletions and/or additions to the project.**

#1

	Question	Response
1	We are requesting the addition of the major classification license of Building Construction be added to this project because Concrete Construction is also a subclassification of Building Construction.	Classification license of Building Construction and Concrete Construction is added to this project.

#2

CATS
CAPITAL AREA TRANSIT SYSTEM
Connecting you to what matters.

Mandatory Pre bid and Site Visit Attendee List

Project Name: ADA Accessible Bus Stop Improvement Project
Date: August 7, 2026
Solicitation # 2026-ADAbuspads-003

List of Attendees

	Attendee Name **Please Print**	Company	Phone	Email
1.	Brandie Martin	Valor Contracting	504-444-5639	admin@valorcontracting.us
2.	Alex Zeretzke	Shamrock	225-478-2026	bids@shamrockcc.com
3.	Michelle Dixon	The Luster Group, LLC.	225-329-1573	flluster@thelustergroup.com
4.	Bryce Langford	Hard rock Construction	504-232-6914	blangford@hardrockconstruction.com
5.	Casey Ponder	[Kost] LLC	504-460-4817	casey@kostllc.com
6.	Dion Taylor	Genesis 360, LLC	225-432-9309	dion+@genesis360llc.com
7.	LIONEL WASHINGTON	CATS	504 495-7222	Lionel.Washington@brcats.com
8.	LEONARD WASHINGTON	CATS	504 388-9987	Leonard.Washington@brcats
9.	O'Neil Parker	Genesis 360, LLC	337-354-6605	procurement@genesis360llc.com
10.	Vincent Dargin	CATS	225-921-8059	vpdargin@brcats.com
	DORTHEA MOUTON	CATS	(225) 389-8930	dmouton@brcat.com

#3

SHEET BR-1
Delete: drawing 3
Insert: the attached drawing marked Attachment "A" dated August 18, 2026

SHEET BR-2
Delete: drawing 2
Insert: the attached drawing marked Attachment "B" dated August 18, 2026

Delete: drawing 4
Insert: the attached drawing marked Attachment "C" dated August 18, 2026

SHEET BR-3
Delete: drawing 3
Insert: the attached drawing marked Attachment "D" dated August 18, 2026

Delete: drawing 4
Insert: the attached drawing marked Attachment "E" dated August 18, 2026

Insert: the attached drawings marked Attachment "U" and "V" dated August 18, 2026

SHEET BR-4
Delete: drawing 1
Insert: the attached drawing marked Attachment "F" dated August 18, 2026

Delete: drawing 2
Insert: the attached drawing marked Attachment "G" dated August 18, 2026

Delete: drawing 3
Insert: the attached drawing marked Attachment "H" dated August 18, 2026

Delete: drawing 5
Insert: the attached drawing marked Attachment "I" dated August 18, 2026

SHEET BR-5
Delete: drawing 1
Insert: the attached drawing marked Attachment "J" dated August 18, 2026

Delete: drawing 2
Insert: the attached drawing marked Attachment "K" dated August 18, 2026

Delete: drawing 3
Insert: the attached drawing marked Attachment "L" dated August 18, 2026

Delete: drawing 5
Insert: the attached drawing marked Attachment "M" dated August 18, 2026

Delete: drawing 6
Insert: the attached drawing marked Attachment "N" dated August 18, 2026

SHEET BR-6
Delete: drawing 5
Insert: the attached drawing marked Attachment "O" dated August 18, 2026

Delete: drawing 6
Insert: the attached drawing marked Attachment "P" dated August 18, 2026

SHEET BR-9
Delete: drawing 5
Insert: the attached drawing marked Attachment "Q" dated August 18, 2026

SHEET BR-10
Delete: drawing 4
Insert: the attached drawing marked Attachment "R" dated August 18, 2026

SHEET BR-11
Delete: drawing 3
Insert: the attached drawing marked Attachment "S" dated August 18, 2026

Delete: drawing 5
Insert: the attached drawing marked Attachment "T" dated August 18, 2026

INSERT THE FOLLOWING SHEETS:

Insert: the attached drawing marked Attachment "AA", "BB", "CC", "DD" and "EE" dated August 18, 2026

PERKINS RD. @ MOSS SIDE - E

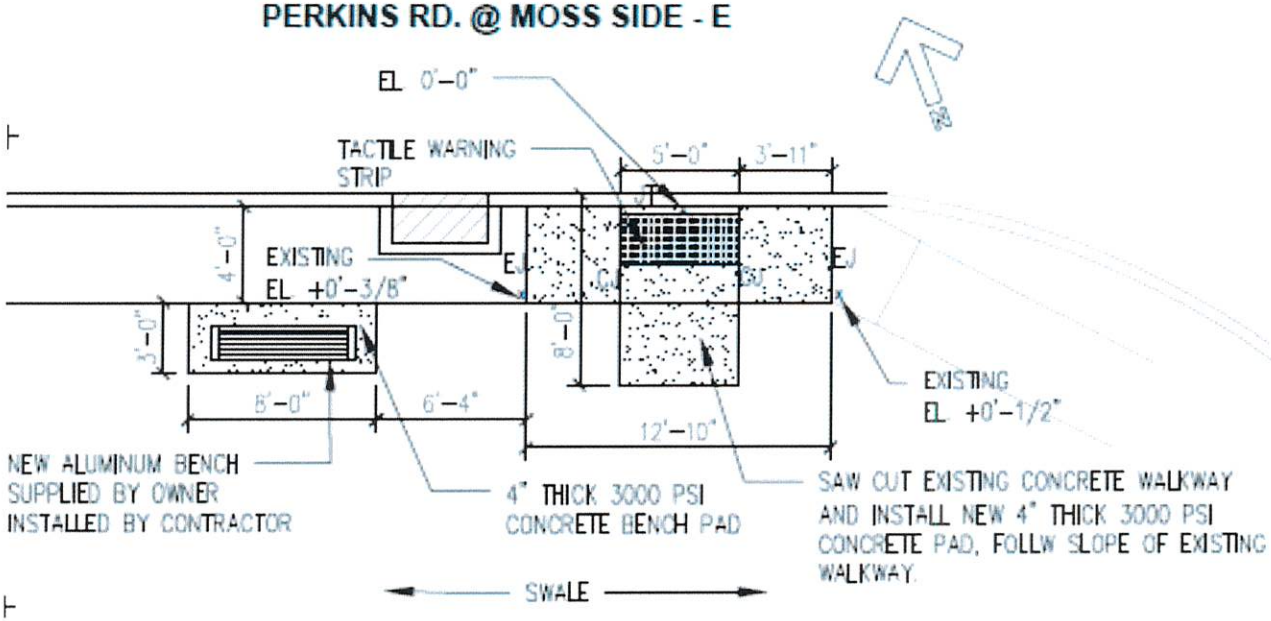

2 / BR-2 PERKINS RD. @ MOSS SIDE / BELFLEUR – E

SCALE 1/8"=1'-0"

ADDENDUM 1, ATTACHMENT "B"

CAPITAL AREA TRANSIT SYSTEM

CATS

FLORIDA BLVD

CATS ADA ACCESSIBLE BUS STOP IMPROVEMENT PROJECT

BATON ROUGE, LOUISIANA

SOLICITATION # 2026-ADABUSPADS-001

ISSUE	
DATE	FOR
-	-
-	-

PROJECT NO:

DATE: 03-16-2026

BY:

CHECKED:

☐ PROGRESS PRINT

NOT FOR CONSTRUCTION

☒ FULL RELEASE

THIS DRAWING IS FULLY RELEASED BY THE ARCHITECT FOR CONSTRUCTION OF THIS PROJECT ONLY

COPYRIGHT © CAPITAL AREA TRANSIT SYSTEM

ALL RIGHTS RESERVED

NOT TO BE COPIED OR REPRODUCED WITHOUT WRITTEN CONSENT OF CAPITAL AREA TRANSIT SYSTEM

SHEET NO. ATTACHMENT "B"

SHEET OF

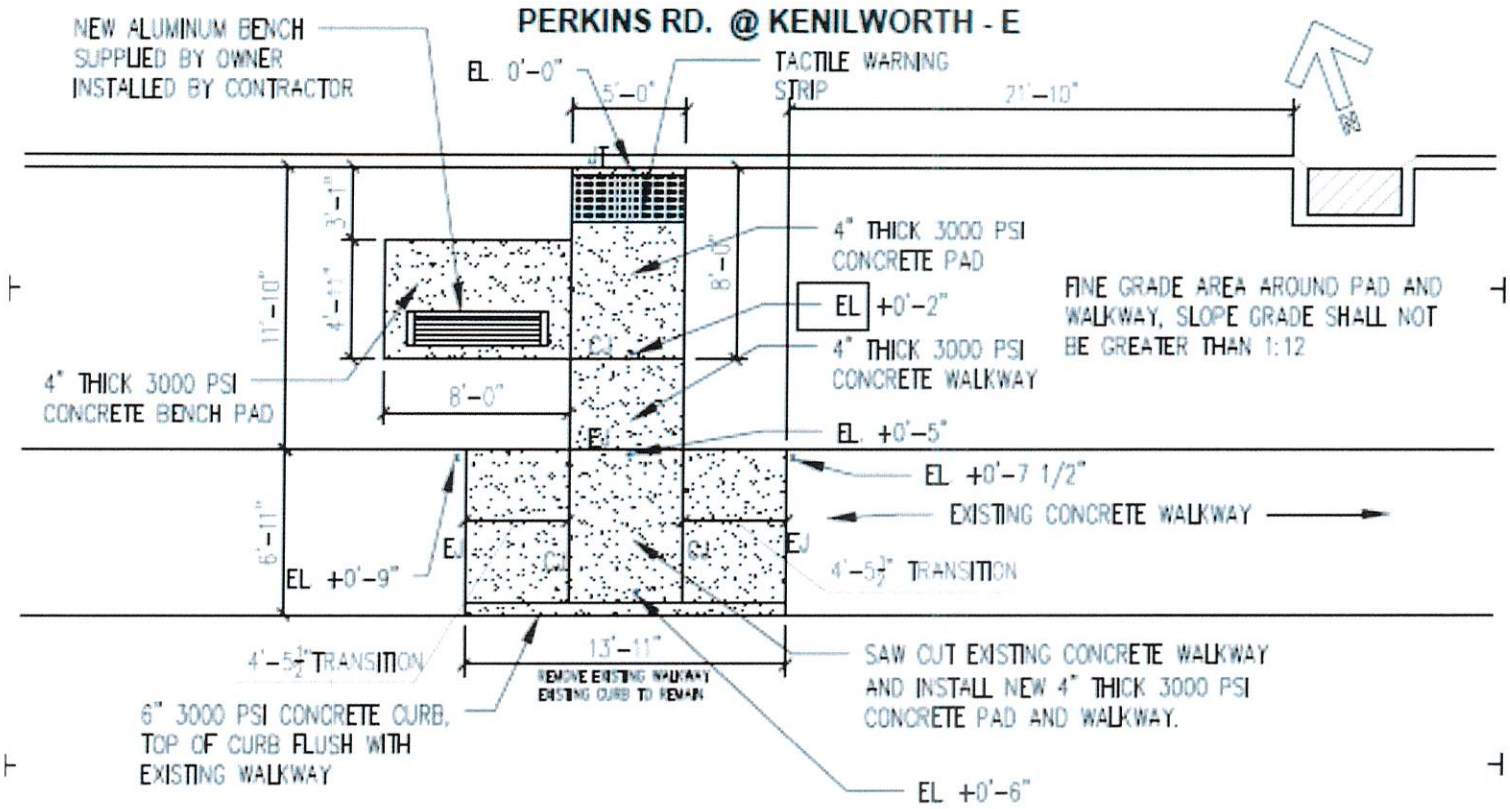

4 / BR-2 PERKINS RD. @ KENILWORTH – E

SCALE 1/8"=1'-0"

ADDENDUM 1, ATTACHMENT "C"

CAPITAL AREA TRANSIT SYSTEM

CATS

CATS ADA ACCESSIBLE BUS STOP IMPROVEMENT PROJECT

BATON ROUGE, LOUISIANA

SOLICITATION # 2026-ADABUSPADS-001

ISSUE	
DATE	FOR
-	-
-	-

PROJECT NO:

DATE: 08-18-2026

BY:

CHECKED:

☐ PROGRESS PRINT

☒ FULL RELEASE

COPYRIGHT © CAPITAL AREA TRANSIT SYSTEM ALL RIGHTS RESERVED

SHEET NO. ATTACHMENT "C"

SHEET OF

PERKINS RD @ CONGRESS - W

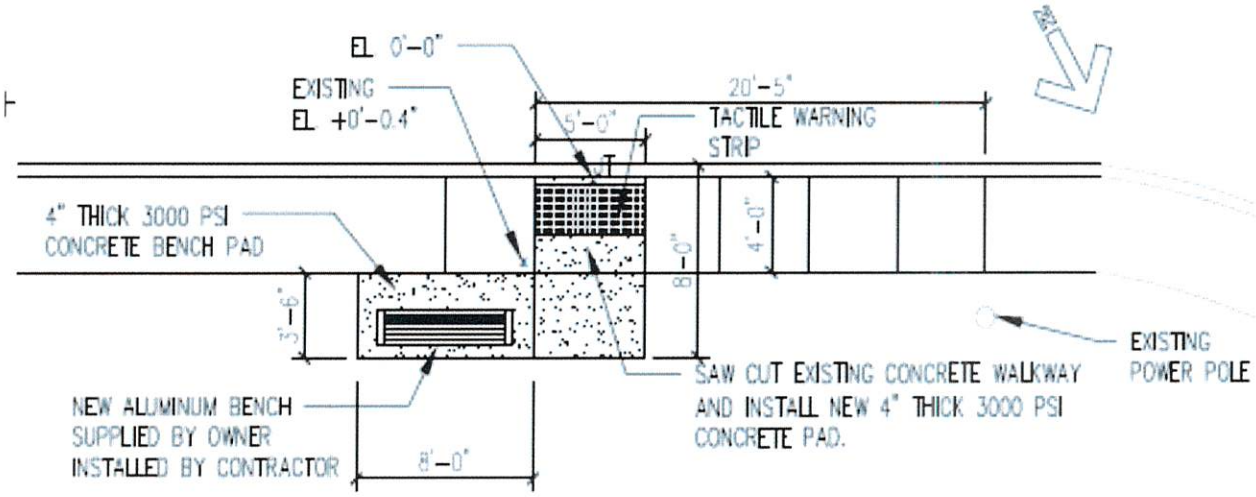

3 / BR-3 PERKINS RD. @ CONGRESS – W
SCALE 1/8"=1'-0"

CONGRESS

ADDENDUM 1, ATTACHMENT "D"

CAPITAL AREA TRANSIT SYSTEM

CATS

CATS ADA ACCESSIBLE BUS STOP IMPROVEMENT PROJECT
BATON ROUGE, LOUISIANA
SOLICITATION # 2026-ADABUSPADS-001

ISSUE	
DATE	FOR
-	-
-	-

PROJECT NO:
DATE: 08-18-2026
BY:
CHECKED:

☐ PROGRESS PRINT
NOT FOR CONSTRUCTION

☒ FULL RELEASE
THIS DRAWING IS FULLY RELEASED BY THE ARCHITECT FOR CONSTRUCTION OF THIS PROJECT ONLY

COPYRIGHT ©
CAPITAL AREA TRANSIT SYSTEM
ALL RIGHTS RESERVED
NOT TO BE COPIED OR REPRODUCED WITHOUT EXPRESSED WRITTEN CONSENT OF
CAPITAL AREA TRANSIT SYSTEM

SHEET NO.
ATTACHMENT "D"
SHEET OF

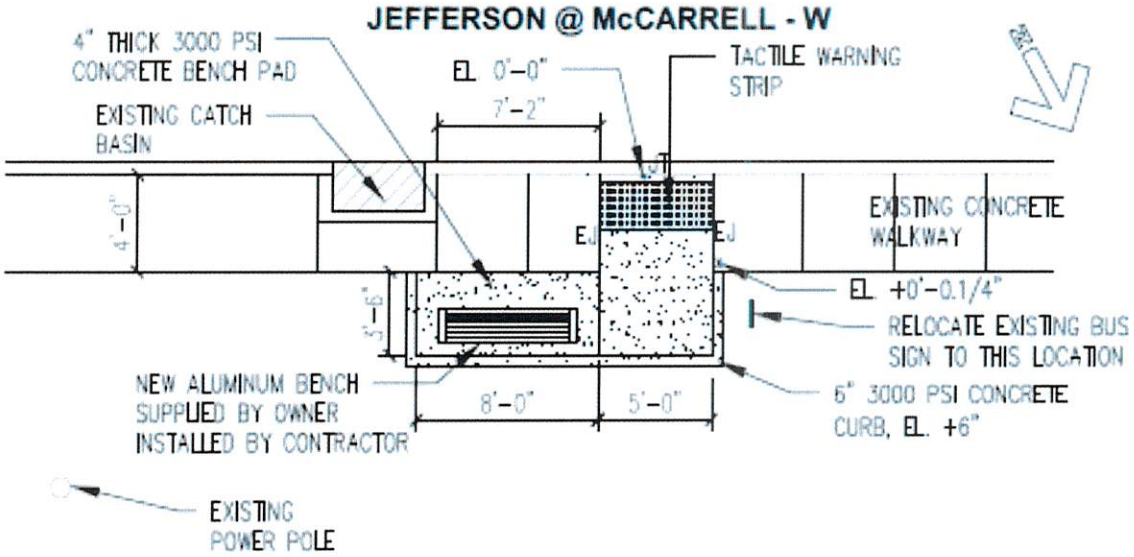

4 / BR-3 JEFFERSON @ McCARRELL – W

SCALE 1/8"=1'-0"

ADDENDUM 1, ATTACHMENT "E"

CAPITAL AREA TRANSIT SYSTEM

CATS

CATS ADA ACCESSIBLE BUS STOP IMPROVEMENT PROJECT

BATON ROUGE, LOUISIANA

SOLICITATION # 2026-ADABUSPADS-001

ISSUE	
DATE	FOR
-	-
-	-

PROJECT NO:

DATE: 08-18-2026

BY:

CHECKED:

☐ PROGRESS PRINT

☒ FULL RELEASE

COPYRIGHT © CAPITAL AREA TRANSIT SYSTEM

SHEET NO. ATTACHMENT "E"

SHEET OF

JEFFERSON @ DRUSILLA - E

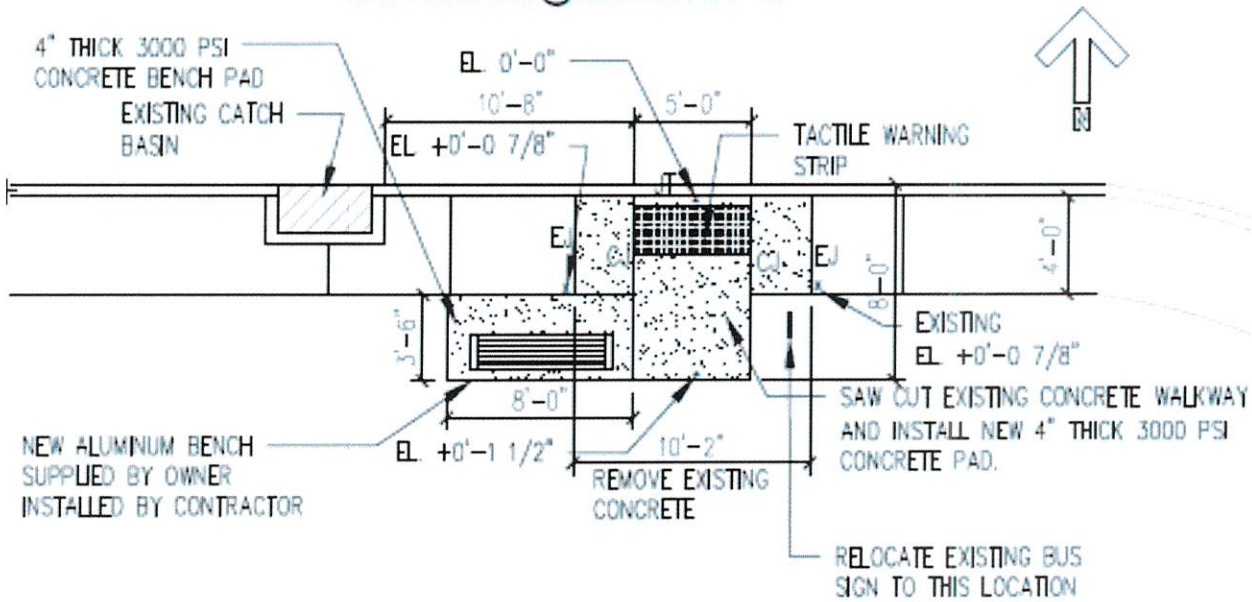

1 / BR-4 JEFFERSON @ DRUSILLA – E

SCALE 1/8"=1'-0"

DRUSILLA

ADDENDUM 1, ATTACHMENT "F"

CAPITAL AREA TRANSIT SYSTEM

CATS

CATS ADA ACCESSIBLE BUS STOP IMPROVEMENT PROJECT

BATON ROUGE, LOUISIANA

SOLICITATION # 2026-ADABUSPADS-001

ISSUE	
DATE	FOR
-	-
-	-

PROJECT NO:

DATE: 08-18-2026

BY:

CHECKED:

☐ PROGRESS PRINT

NOT FOR CONSTRUCTION

☒ FULL RELEASE

THIS DRAWING IS FULLY RELEASED BY THE ARCHITECT FOR CONSTRUCTION OF THIS PROJECT ONLY

COPYRIGHT © CAPITAL AREA TRANSIT SYSTEM
ALL RIGHTS RESERVED
NOT TO BE COPIED OR REPRODUCED WITHOUT WRITTEN CONSENT OF CAPITAL AREA TRANSIT SYSTEM

SHEET NO. ATTACHMENT "F"

SHEET OF

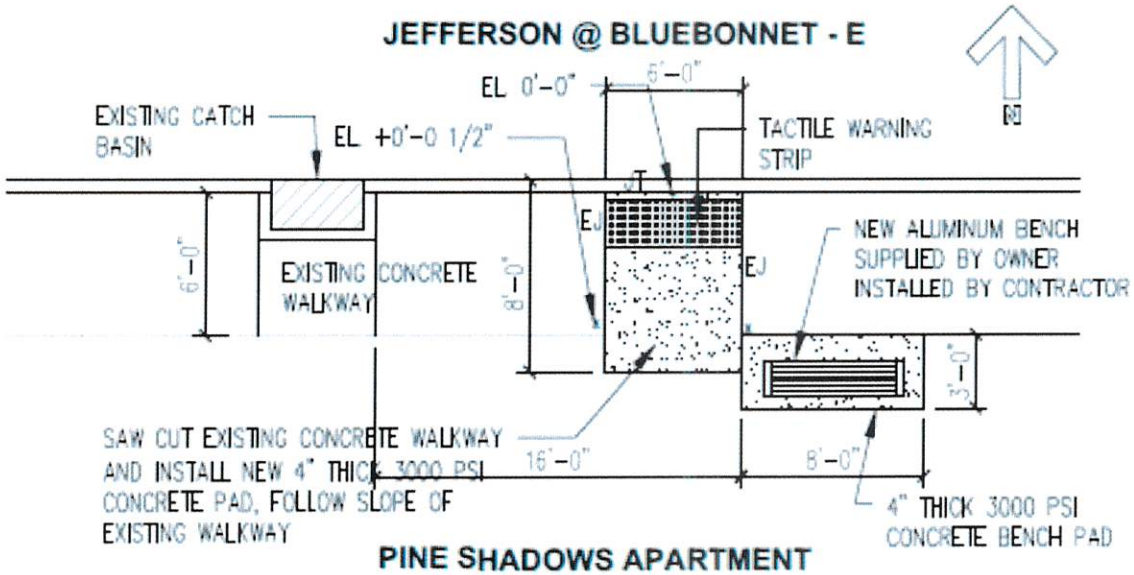

2 / BR-4 JEFFERSON @ BLUEBONNET – E

SCALE 1/8"=1'-0"

ADDENDUM 1, ATTACHMENT "G"

CAPITAL AREA TRANSIT SYSTEM

CATS

FLORIDA BLVD
FOREST HILL
EUROPE

CATS ADA ACCESSIBLE BUS STOP IMPROVEMENT PROJECT
BATON ROUGE, LOUISIANA
SOLICITATION # 2026-ADABUSPADS-001

ISSUE	
DATE	FOR
-	-
-	-

PROJECT NO:
DATE: 09-16-2026
BY:
CHECKED:

☐ PROGRESS PRINT
NOT FOR CONSTRUCTION

☒ FULL RELEASE
THIS DRAWING IS FULLY RELEASED BY THE ARCHITECT FOR CONSTRUCTION OF THIS PROJECT ONLY

COPYRIGHT ©
CAPITAL AREA TRANSIT SYSTEM
ALL RIGHTS RESERVED
NOT TO BE COPIED OR REPRODUCED WITHOUT EXPRESSED WRITTEN CONSENT OF CAPITAL AREA TRANSIT SYSTEM

SHEET NO.
ATTACHMENT "G"
SHEET OF

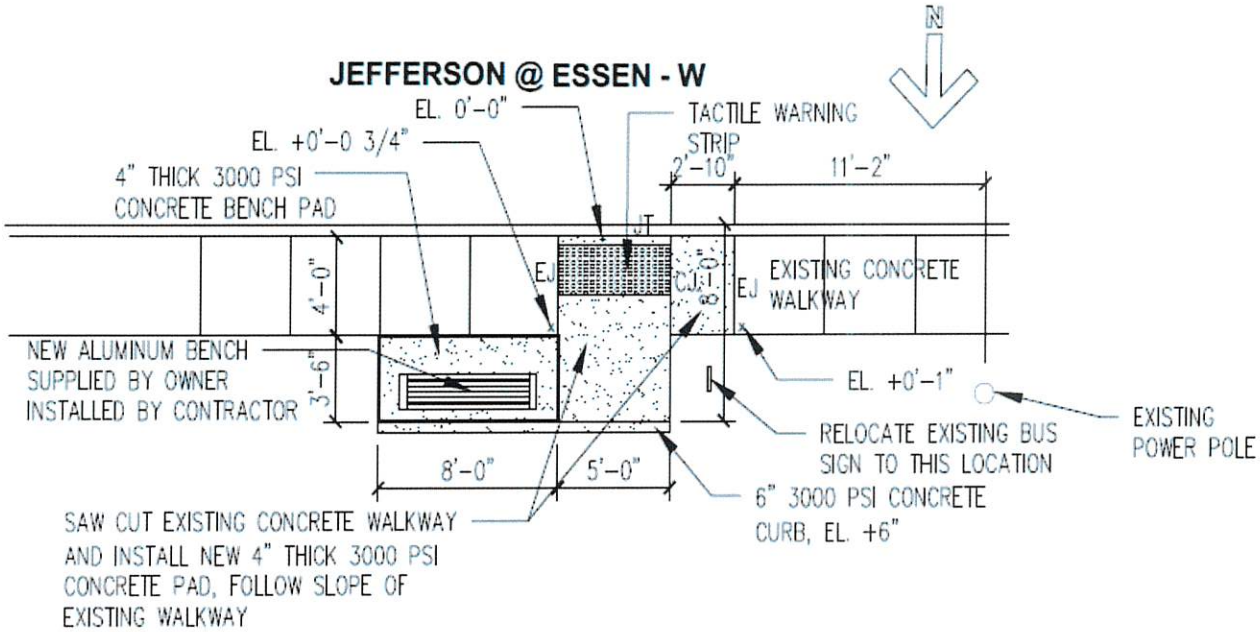

3 / BR-4 JEFFERSON @ ESSEN – W

SCALE: 1/8"=1'-0"

ADDENDUM 1,
ATTACHMENT "H"

CAPITAL AREA TRANSIT SYSTEM

CATS

2250 FLORIDA BLVD
BATON ROUGE, LA
70802

CATS ADA ACCESSIBLE BUS STOP IMPROVEMENT PROJECT

BATON ROUGE, LOUISIANA

SOLICITATION # 2026-ADABUSPADS-001

ISSUE	
DATE	FOR
-	-
-	-

PROJECT NO:
DATE: 08-18-2026
BY:
CHECKED:

☐ PROGRESS PRINT
NOT FOR CONSTRUCTION

☒ FULL RELEASE
THIS DRAWING IS FULLY RELEASED BY THE ARCHITECT FOR CONSTRUCTION OF THIS PROJECT ONLY

COPYRIGHT ©
CAPITAL AREA TRANSIT SYSTEM
ALL RIGHTS RESERVED.
NOT TO BE COPIED OR REPRODUCED WITHOUT EXPRESSED WRITTEN CONSENT OF CAPITAL AREA TRANSIT SYSTEM

SHEET NO.
ATTACHMENT "H"
SHEET OF

JEFFERSON @ BRANDON - E

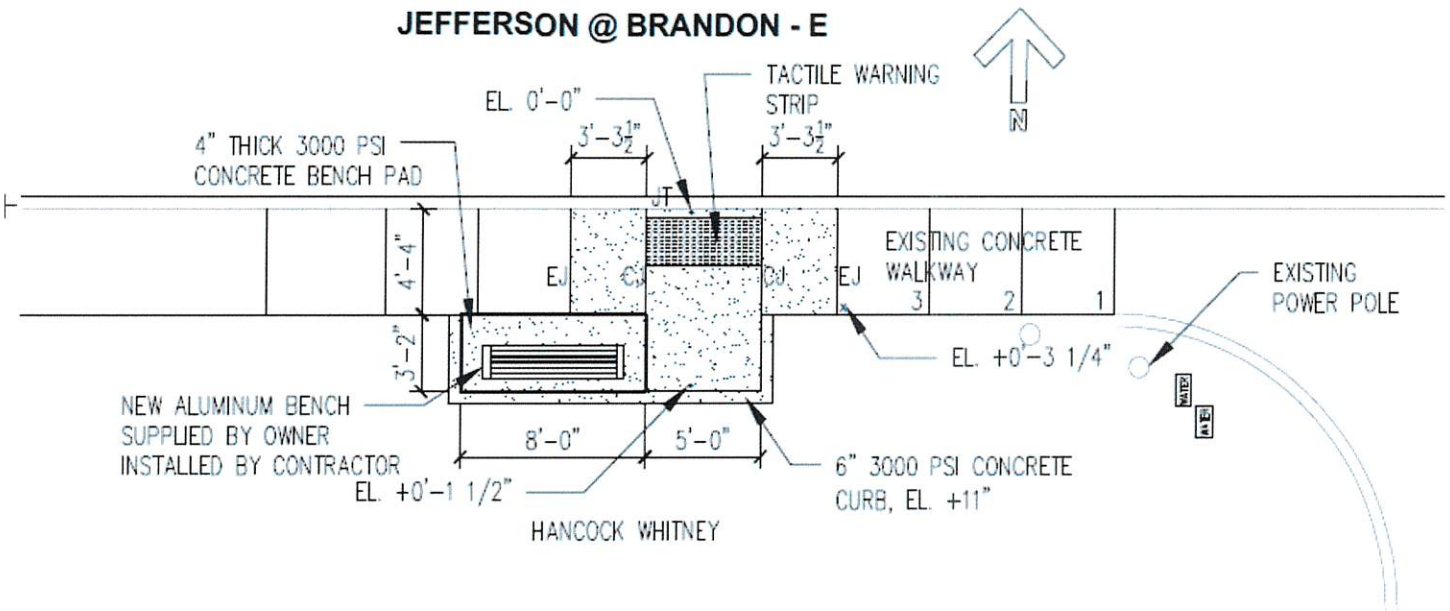

5 / BR-4 JEFFERSON @ BRANDON - E

SCALE: 1/8"=1'-0"

ADDENDUM 1,
ATTACHMENT "I"

CAPITAL AREA TRANSIT SYSTEM

CATS

2250 FLORIDA BLVD
BATON ROUGE, LA
70802

CATS ADA ACCESSIBLE BUS STOP IMPROVEMENT PROJECT
BATON ROUGE, LOUISIANA
SOLICITATION # 2026-ADABUSPADS-001

ISSUE	
DATE	FOR
-	-
-	-

PROJECT NO:
DATE: 08-18-2026
BY:
CHECKED:

☐ PROGRESS PRINT
NOT FOR CONSTRUCTION

☒ FULL RELEASE
THIS DRAWING IS FULLY RELEASED BY THE ARCHITECT FOR CONSTRUCTION OF THIS PROJECT ONLY

COPYRIGHT ©
CAPITAL AREA TRANSIT SYSTEM
ALL RIGHTS RESERVED
NOT TO BE COPIED OR REPRODUCED WITHOUT EXPRESSED WRITTEN CONSENT OF CAPITAL AREA TRANSIT SYSTEM

SHEET NO.
ATTACHMENT "I"
SHEET OF

JEFFERSON @ SUNRISE APT. - E

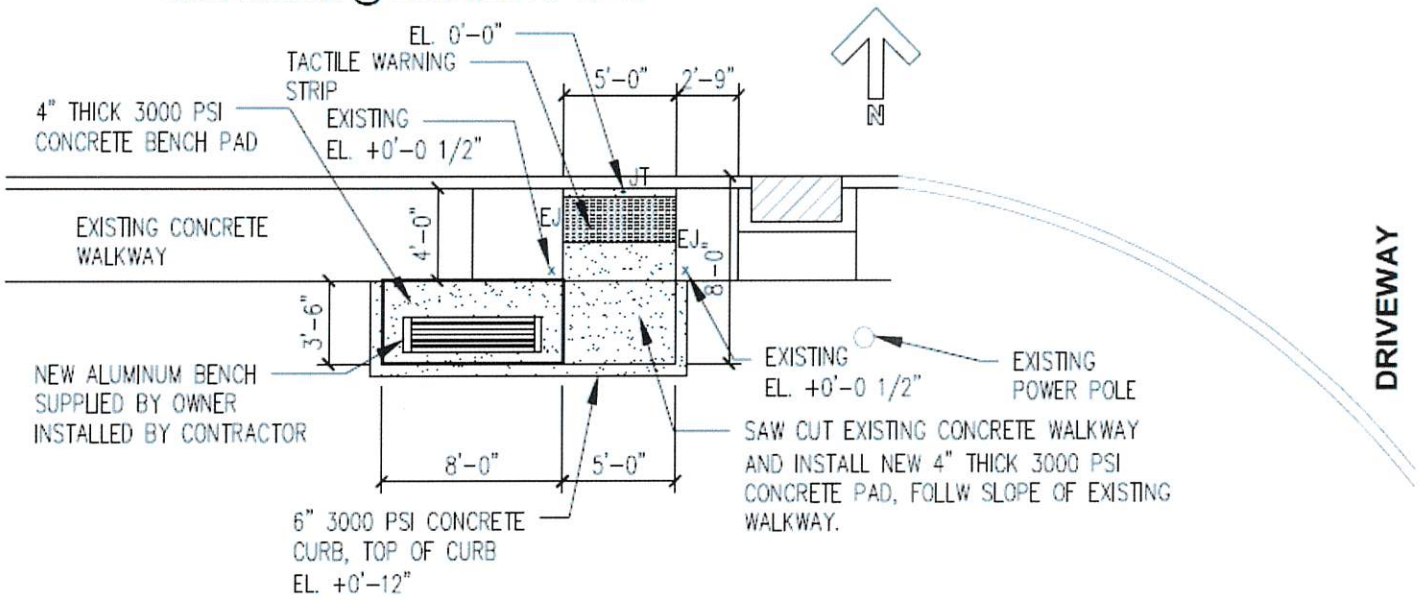

1 / BR-5 JEFFERSON @ SUNRISE APT. – E

SCALE: 1/8"=1'-0"

ADDENDUM 1,
ATTACHMENT "J"

CAPITAL AREA TRANSIT SYSTEM

CATS

2250 FLORIDA BLVD
BATON ROUGE, LA
70802

CATS ADA ACCESSIBLE BUS STOP IMPROVEMENT PROJECT
BATON ROUGE, LOUISIANA
SOLICITATION # 2026-ADABUSPADS-001

ISSUE	
DATE	FOR
-	-
-	-

PROJECT NO:
DATE: 08-18-2026
BY:
CHECKED:

☐ PROGRESS PRINT
NOT FOR CONSTRUCTION

☒ FULL RELEASE
THIS DRAWING IS FULLY RELEASED BY THE ARCHITECT FOR CONSTRUCTION OF THIS PROJECT ONLY

COPYRIGHT ©
CAPITAL AREA TRANSIT SYSTEM
ALL RIGHTS RESERVED.
NOT TO BE COPIED OR REPRODUCED WITHOUT EXPRESSED WRITTEN CONSENT OF CAPITAL AREA TRANSIT SYSTEM

SHEET NO.
ATTACHMENT "J"
SHEET OF

JEFFERSON @ JEFFERSON PLACE BLVD. - W

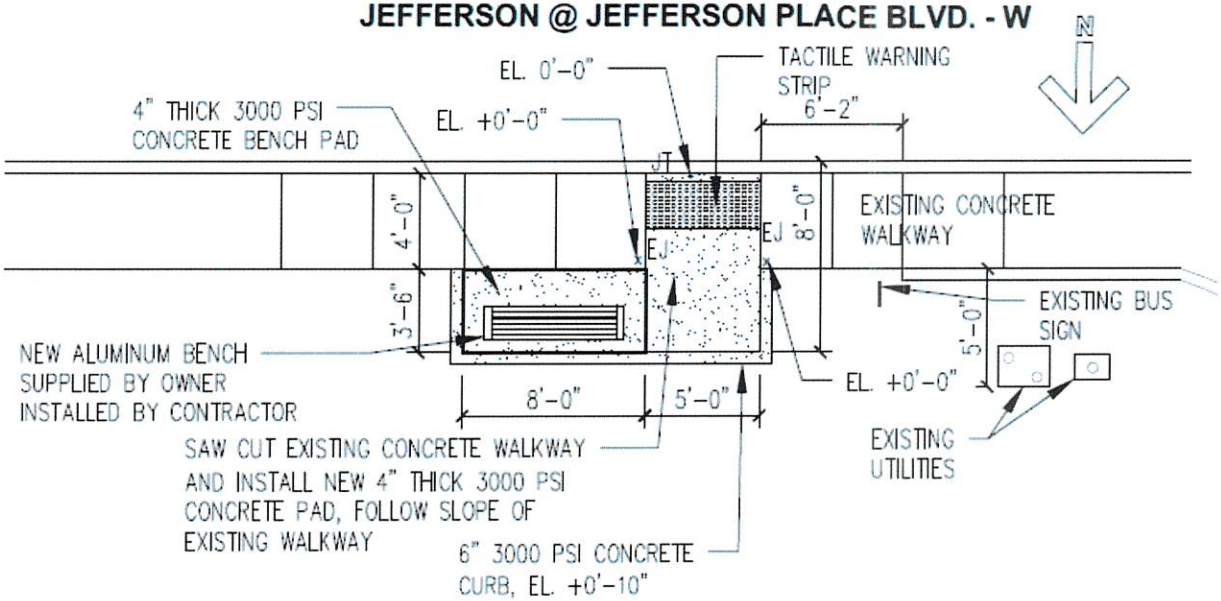

2 / BR-5 JEFFERSON @ JEFFERSON PLACE BLVD. – W

SCALE: 1/8"=1'-0"

ADDENDUM 1, ATTACHMENT "K"

CAPITAL AREA TRANSIT SYSTEM

CATS

2250 FLORIDA BLVD
BATON ROUGE, LA
70802

CATS ADA ACCESSIBLE BUS STOP IMPROVEMENT PROJECT
BATON ROUGE, LOUISIANA
SOLICITATION # 2026-ADABUSPADS-001

ISSUE	
DATE	FOR
-	-
-	-

PROJECT NO:
DATE: 08-18-2026
BY:
CHECKED:

☐ PROGRESS PRINT
NOT FOR CONSTRUCTION

☒ FULL RELEASE
THIS DRAWING IS FULLY RELEASED BY THE ARCHITECT FOR CONSTRUCTION OF THIS PROJECT ONLY

COPYRIGHT ©
CAPITAL AREA TRANSIT SYSTEM
ALL RIGHTS RESERVED
NOT TO BE COPIED OR REPRODUCED WITHOUT EXPRESSED WRITTEN CONSENT OF CAPITAL AREA TRANSIT SYSTEM

SHEET NO.
ATTACHMENT "K"
SHEET OF

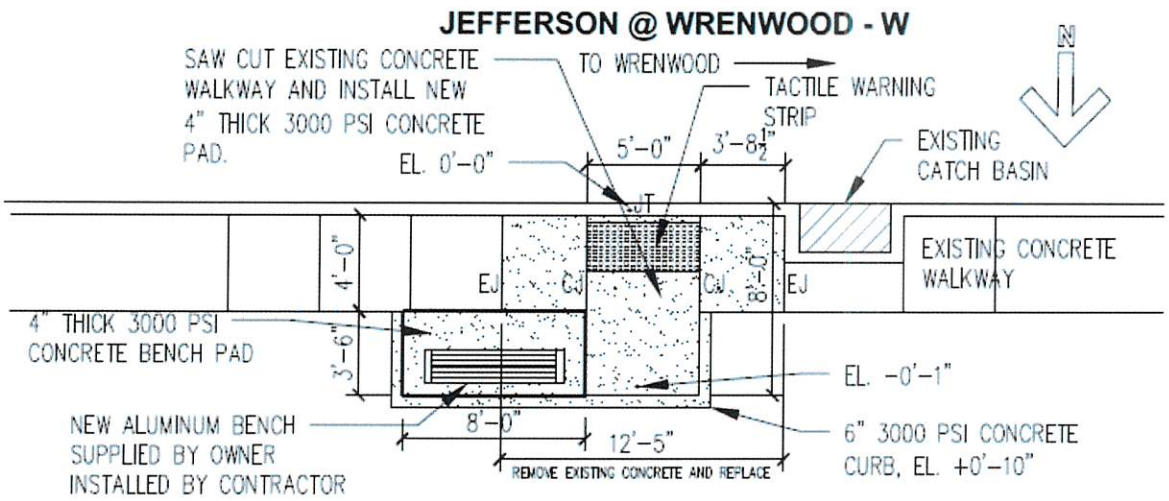

3 / BR-5 JEFFERSON @ WRENWOOD. – W

SCALE: 1/8"=1'-0"

ADDENDUM 1,
ATTACHMENT "L"

CAPITAL AREA TRANSIT SYSTEM

CATS

2250 FLORIDA BLVD
BATON ROUGE, LA
70802

CATS ADA ACCESSIBLE BUS STOP IMPROVEMENT PROJECT
BATON ROUGE, LOUISIANA
SOLICITATION # 2026-ADABUSPADS-001

ISSUE	
DATE	FOR
-	-
-	-

PROJECT NO:
DATE: 08-18-2026
BY:
CHECKED:

☐ PROGRESS PRINT
NOT FOR CONSTRUCTION

☒ FULL RELEASE
THIS DRAWING IS FULLY RELEASED BY THE ARCHITECT FOR CONSTRUCTION OF THIS PROJECT ONLY

COPYRIGHT ©
CAPITAL AREA TRANSIT SYSTEM
ALL RIGHTS RESERVED.
NOT TO BE COPIED OR REPRODUCED WITHOUT EXPRESSED WRITTEN CONSENT OF CAPITAL AREA TRANSIT SYSTEM

SHEET NO.
ATTACHMENT "L"
SHEET OF

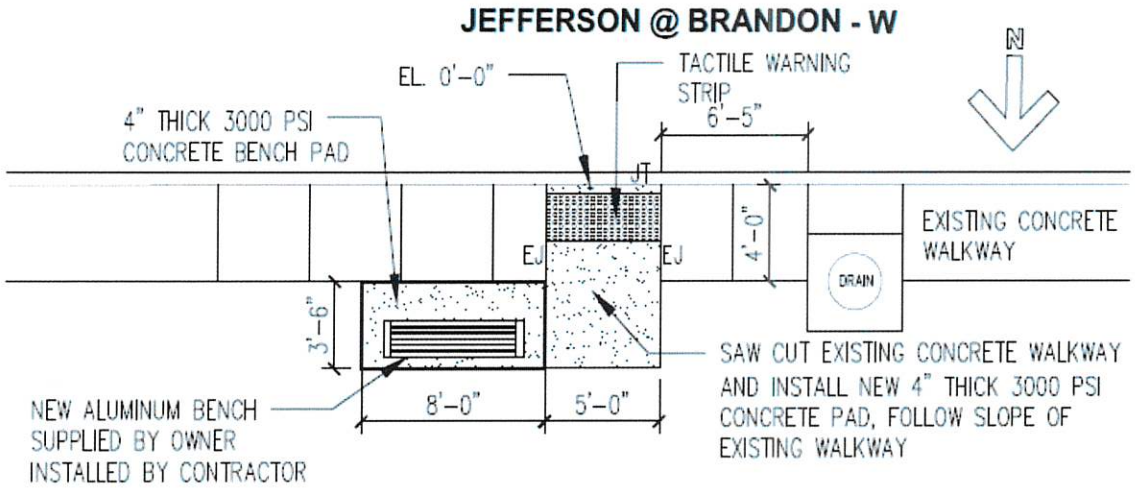

5 / BR-5 JEFFERSON @ BRANDON - W

SCALE: 1/8"=1'-0"

ADDENDUM 1, ATTACHMENT "M"

CAPITAL AREA TRANSIT SYSTEM

CATS

2250 FLORIDA BLVD
BATON ROUGE, LA
70802

CATS ADA ACCESSIBLE BUS STOP IMPROVEMENT PROJECT

BATON ROUGE, LOUISIANA

SOLICITATION # 2026-ADABUSPADS-001

ISSUE	
DATE	FOR
-	-
-	-

PROJECT NO:

DATE: 08-18-2026

BY:

CHECKED:

☐ PROGRESS PRINT
NOT FOR CONSTRUCTION

☒ FULL RELEASE
THIS DRAWING IS FULLY RELEASED BY THE ARCHITECT FOR CONSTRUCTION OF THIS PROJECT ONLY

COPYRIGHT ©
CAPITAL AREA TRANSIT SYSTEM
ALL RIGHTS RESERVED
NOT TO BE COPIED OR REPRODUCED WITHOUT EXPRESSED WRITTEN CONSENT OF CAPITAL AREA TRANSIT SYSTEM

SHEET NO.
ATTACHMENT "M"
SHEET OF

JEFFERSON @ CORPORATE BLVD - W

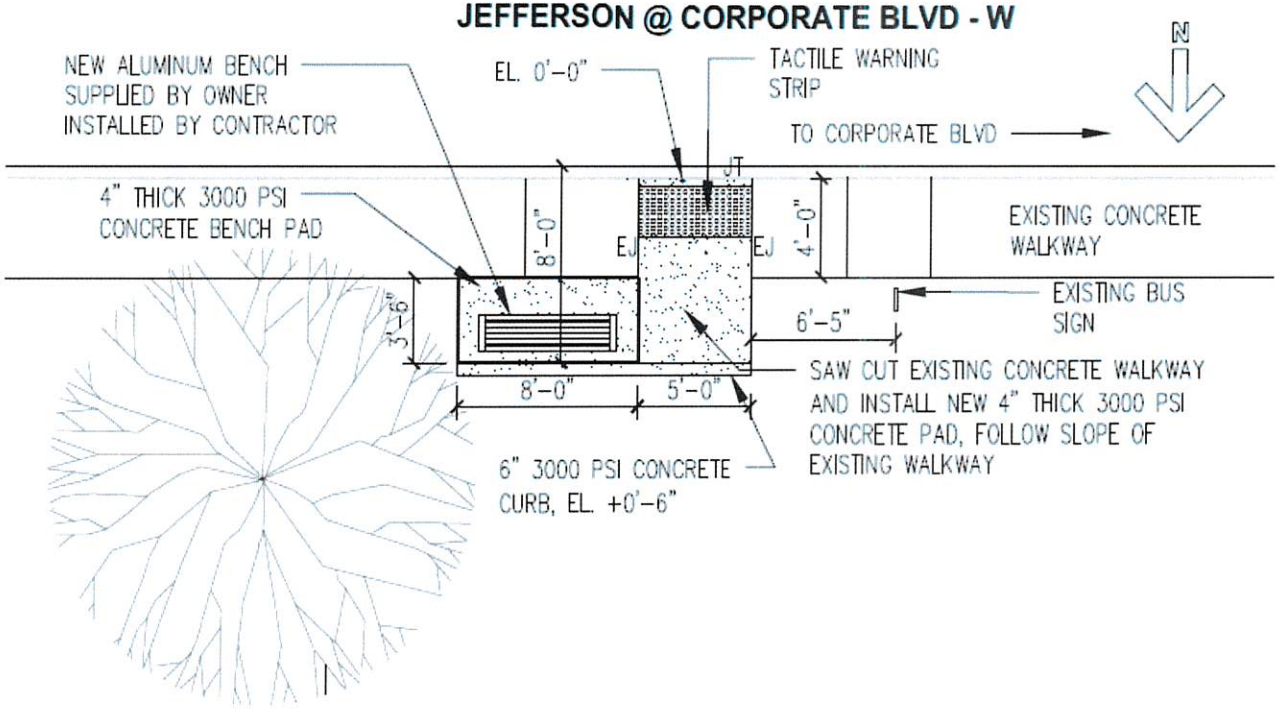

6 / BR-5 JEFFERSON @ CORPORATE BLVD. – W

SCALE: 1/8"=1'-0"

ADDENDUM 1, ATTACHMENT "N"

CAPITAL AREA TRANSIT SYSTEM

CATS

2250 FLORIDA BLVD
BATON ROUGE, LA
70802

CATS ADA ACCESSIBLE BUS STOP IMPROVEMENT PROJECT
BATON ROUGE, LOUISIANA
SOLICITATION # 2026-ADABUSPADS-001

ISSUE	
DATE	FOR
-	-
-	-

PROJECT NO:
DATE: 08-18-2026
BY:
CHECKED:

☐ PROGRESS PRINT
NOT FOR CONSTRUCTION

☒ FULL RELEASE
THIS DRAWING IS FULLY RELEASED BY THE ARCHITECT FOR CONSTRUCTION OF THIS PROJECT ONLY

COPYRIGHT ©
CAPITAL AREA TRANSIT SYSTEM
ALL RIGHTS RESERVED
NOT TO BE COPIED OR REPRODUCED WITHOUT EXPRESSED WRITTEN CONSENT OF CAPITAL AREA TRANSIT SYSTEM

SHEET NO.
ATTACHMENT "N"
SHEET OF

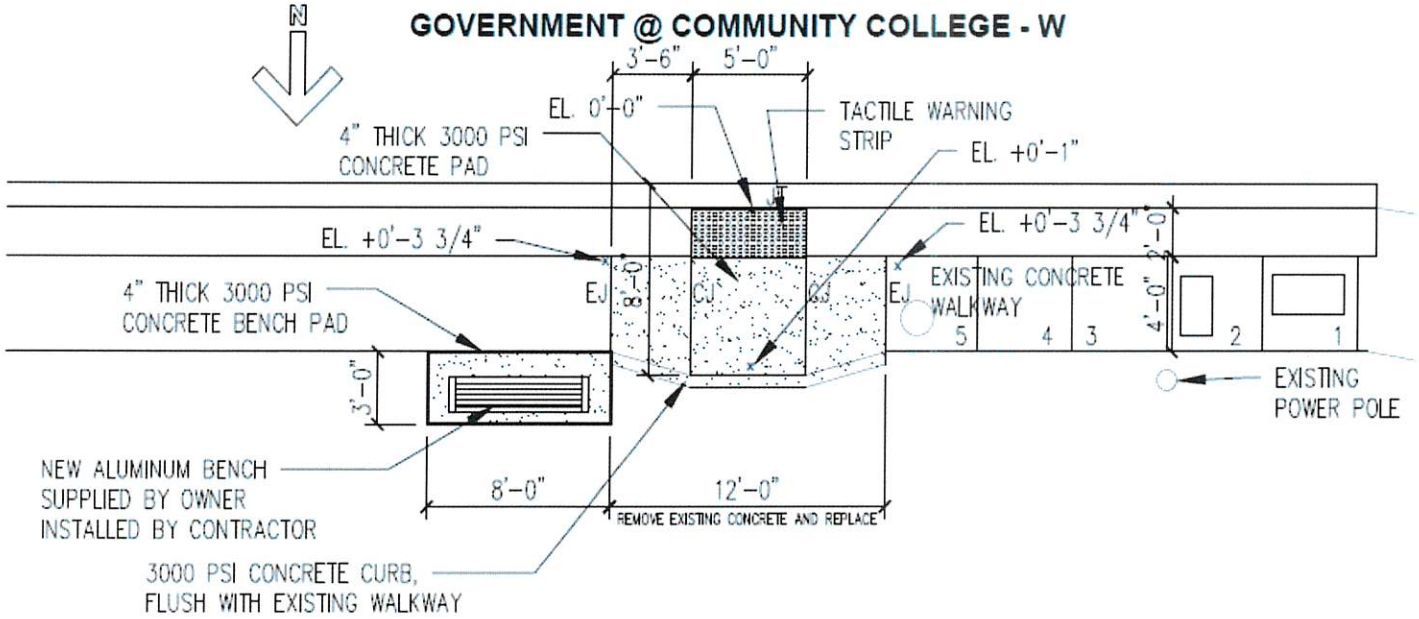

5 / BR-6 GOVERNMENT @ COMMUNITY COLLEGE. – W

SCALE: 1/8"=1'-0"

ADDENDUM 1,
ATTACHMENT "O"

CAPITAL AREA TRANSIT SYSTEM

CATS

2250 FLORIDA BLVD
BATON ROUGE, LA
70802

CATS ADA ACCESSIBLE BUS STOP IMPROVEMENT PROJECT
BATON ROUGE, LOUISIANA
SOLICITATION # 2026-ADABUSPADS-001

ISSUE	
DATE	FOR
-	-
-	-

PROJECT NO:
DATE: 08-18-2026
BY:
CHECKED:

☐ PROGRESS PRINT
NOT FOR CONSTRUCTION

☒ FULL RELEASE
THIS DRAWING IS FULLY RELEASED BY THE ARCHITECT FOR CONSTRUCTION OF THIS PROJECT ONLY

COPYRIGHT ©
CAPITAL AREA TRANSIT SYSTEM
ALL RIGHTS RESERVED
NOT TO BE COPIED OR REPRODUCED WITHOUT EXPRESSED WRITTEN CONSENT OF CAPITAL AREA TRANSIT SYSTEM

SHEET NO.
ATTACHMENT "O"
SHEET OF

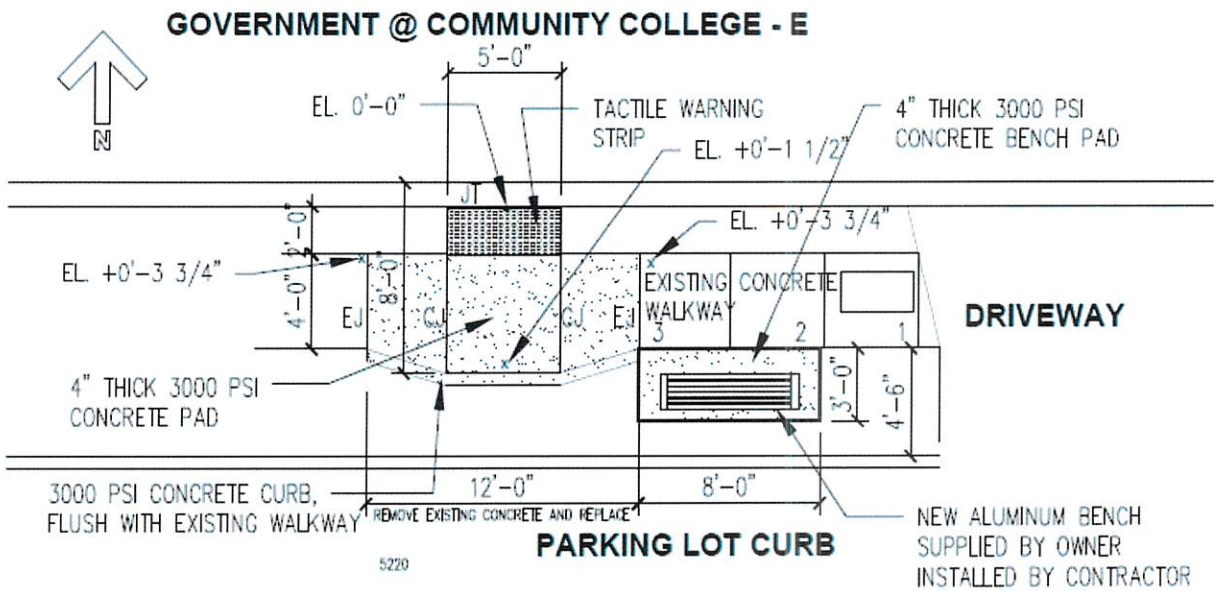

6 / BR-6 GOVERNMENT @ COMMUNITY COLLEGE. – E

SCALE: 1/8"=1'-0"

ADDENDUM 1, ATTACHMENT "P"

CAPITAL AREA TRANSIT SYSTEM

CATS

2250 FLORIDA BLVD
BATON ROUGE, LA
70802

CATS ADA ACCESSIBLE BUS STOP IMPROVEMENT PROJECT

BATON ROUGE, LOUISIANA

SOLICITATION # 2026-ADABUSPADS-001

ISSUE	
DATE	FOR
-	-
-	-

PROJECT NO:

DATE: 08-18-2026

BY:

CHECKED:

☐ PROGRESS PRINT
NOT FOR CONSTRUCTION

☒ FULL RELEASE
THIS DRAWING IS FULLY RELEASED BY THE ARCHITECT FOR CONSTRUCTION OF THIS PROJECT ONLY

COPYRIGHT ©
CAPITAL AREA TRANSIT SYSTEM
ALL RIGHTS RESERVED
NOT TO BE COPIED OR REPRODUCED WITHOUT EXPRESSED WRITTEN CONSENT OF CAPITAL AREA TRANSIT SYSTEM

SHEET NO.
ATTACHMENT "P"
SHEET OF

S. FOSTER ST. @ CLAYCUT CONDOS

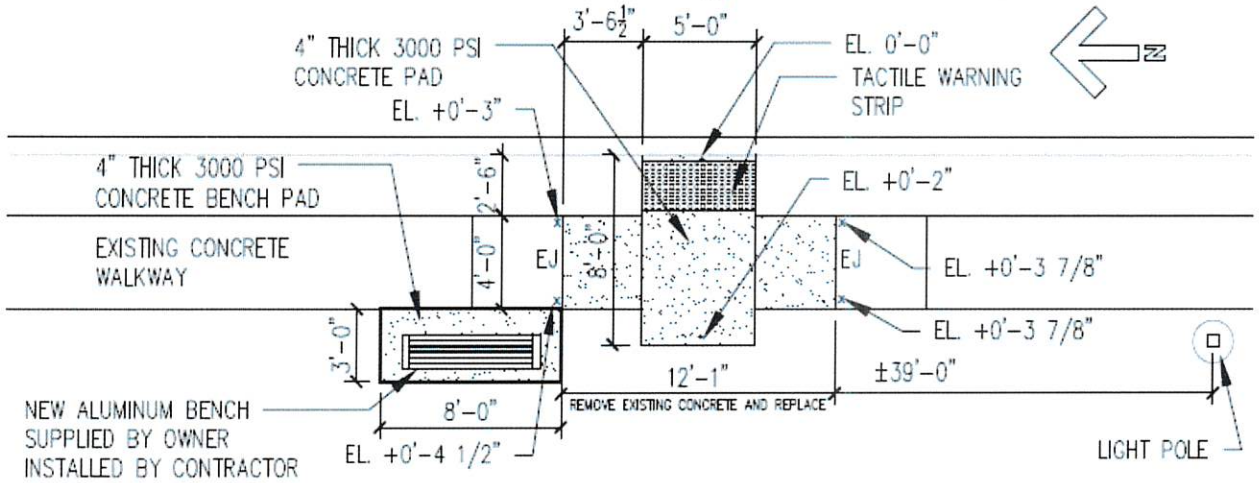

5 / BR-9 S. FOSTER ST. @ CLAYCUT CONDOS

SCALE: 1/8"=1'-0"

ADDENDUM 1, ATTACHMENT "Q"

CAPITAL AREA TRANSIT SYSTEM

CATS

2250 FLORIDA BLVD
BATON ROUGE, LA
70802

CATS ADA ACCESSIBLE BUS STOP IMPROVEMENT PROJECT

BATON ROUGE, LOUISIANA

SOLICITATION # 2026-ADABUSPADS-001

ISSUE	
DATE	FOR
-	-
-	-

PROJECT NO:

DATE: 08-18-2026

BY:

CHECKED:

☐ PROGRESS PRINT
NOT FOR CONSTRUCTION

☒ FULL RELEASE
THIS DRAWING IS FULLY RELEASED BY THE ARCHITECT FOR CONSTRUCTION OF THIS PROJECT ONLY

COPYRIGHT ©
CAPITAL AREA TRANSIT SYSTEM
ALL RIGHTS RESERVED
NOT TO BE COPIED OR REPRODUCED WITHOUT EXPRESSED WRITTEN CONSENT OF CAPITAL AREA TRANSIT SYSTEM

SHEET NO.
ATTACHMENT "Q"
SHEET OF

S. FOSTER ST. @ BRCC - N

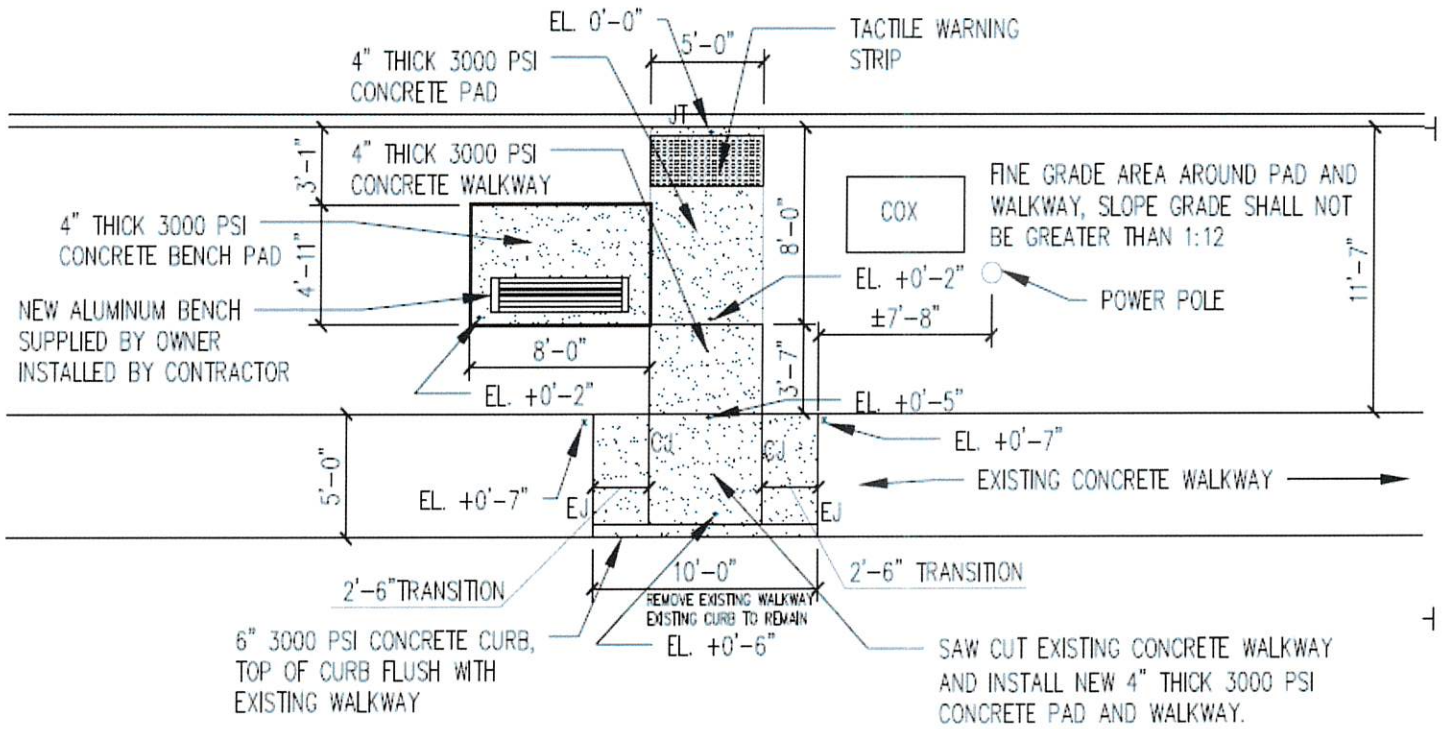

4 / BR-10 S. FOSTER ST. @ BRCC – N

SCALE: 1/8"=1'-0"

ADDENDUM 1, ATTACHMENT "R"

CAPITAL AREA TRANSIT SYSTEM

CATS

2250 FLORIDA BLVD
BATON ROUGE, LA
70802

CATS ADA ACCESSIBLE BUS STOP IMPROVEMENT PROJECT
BATON ROUGE, LOUISIANA
SOLICITATION # 2026-ADABUSPADS-001

ISSUE	
DATE	FOR
-	-
-	-

PROJECT NO:
DATE: 08-18-2026
BY:
CHECKED:

☐ PROGRESS PRINT
NOT FOR CONSTRUCTION

☒ FULL RELEASE
THIS DRAWING IS FULLY RELEASED BY THE ARCHITECT FOR CONSTRUCTION OF THIS PROJECT ONLY

COPYRIGHT ©
CAPITAL AREA TRANSIT SYSTEM
ALL RIGHTS RESERVED
NOT TO BE COPIED OR REPRODUCED WITHOUT EXPRESSED WRITTEN CONSENT OF CAPITAL AREA TRANSIT SYSTEM

SHEET NO.
ATTACHMENT "R"
SHEET OF

S. FOSTER ST @ CRILLON APARTMENTS - N

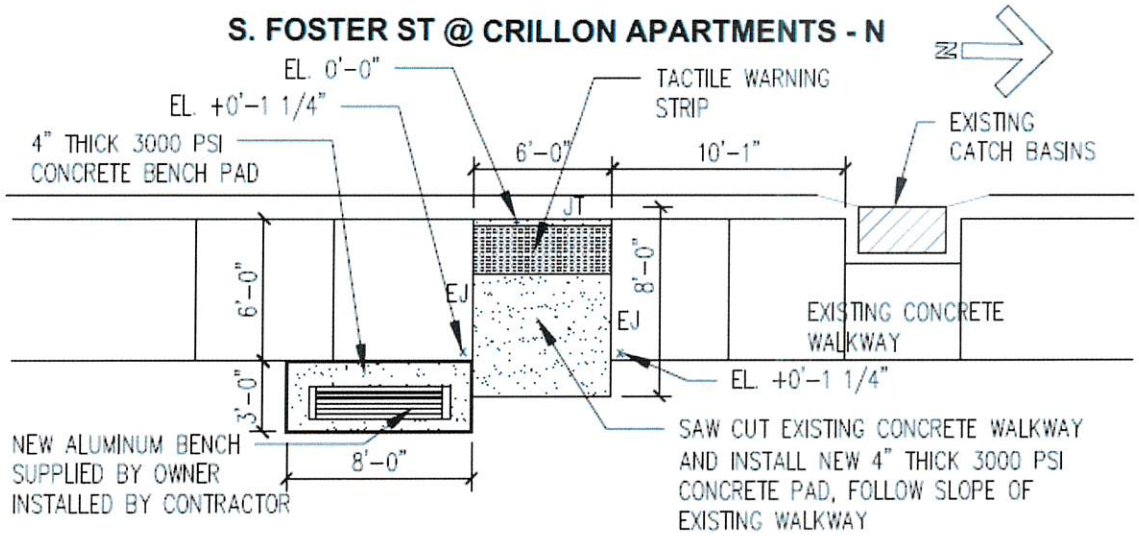

3 / BR-11 S. FOSTER @ CRILLON APARTMENT - N

SCALE: 1/8"=1'-0"

ADDENDUM 1, ATTACHMENT "S"

CAPITAL AREA TRANSIT SYSTEM

CATS

2250 FLORIDA BLVD
BATON ROUGE, LA
70802

CATS ADA ACCESSIBLE BUS STOP IMPROVEMENT PROJECT

BATON ROUGE, LOUISIANA

SOLICITATION # 2026-ADABUSPADS-001

ISSUE	
DATE	FOR
-	-
-	-

PROJECT NO:

DATE: 08-18-2026

BY:

CHECKED:

☐ PROGRESS PRINT

NOT FOR CONSTRUCTION

☒ FULL RELEASE

THIS DRAWING IS FULLY RELEASED BY THE ARCHITECT FOR CONSTRUCTION OF THIS PROJECT ONLY

COPYRIGHT ©
CAPITAL AREA TRANSIT SYSTEM
ALL RIGHTS RESERVED
NOT TO BE COPIED OR REPRODUCED WITHOUT EXPRESSED WRITTEN CONSENT OF CAPITAL AREA TRANSIT SYSTEM

SHEET NO.
ATTACHMENT "S"

SHEET OF

N. FOSTER ST. @ PLAIN VIEW CHURCH - S

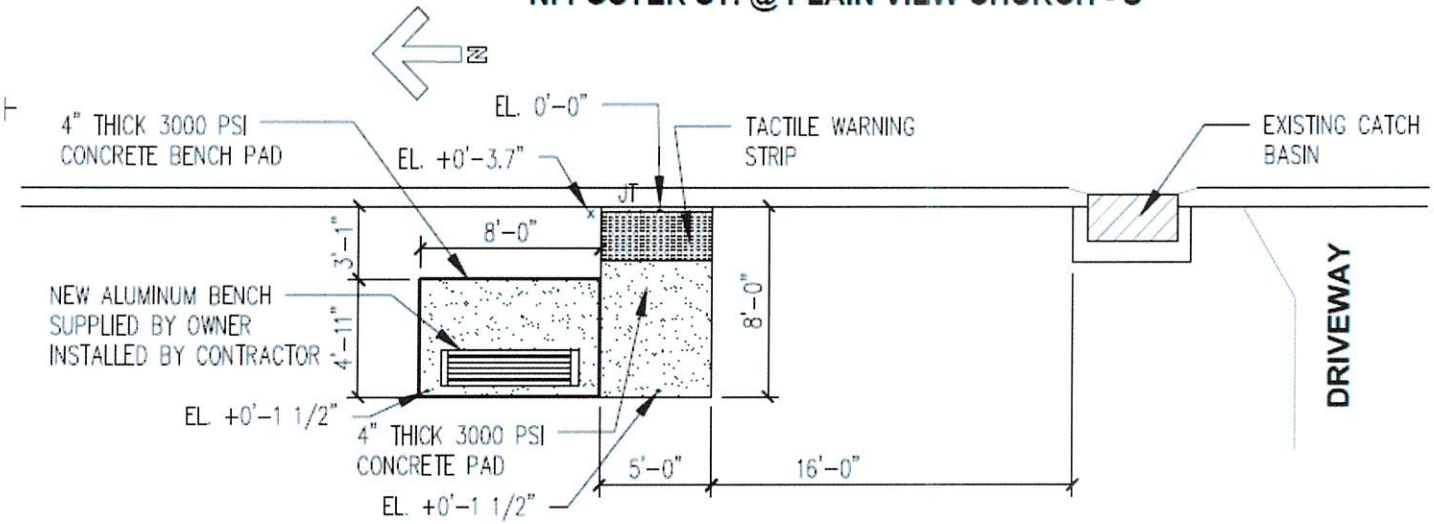

5 / BR-11 N. FOSTER ST. @ PLAIN VIEW CHURCH – S

SCALE: 1/8"=1'-0"

ADDENDUM 1,
ATTACHMENT "T"

CAPITAL AREA TRANSIT SYSTEM

CATS

2250 FLORIDA BLVD
BATON ROUGE, LA
70802

CATS ADA ACCESSIBLE BUS STOP IMPROVEMENT PROJECT
BATON ROUGE, LOUISIANA
SOLICITATION # 2026-ADABUSPADS-001

ISSUE	
DATE	FOR
-	-
-	-

PROJECT NO:
DATE: 08-18-2026
BY:
CHECKED:

☐ PROGRESS PRINT
NOT FOR CONSTRUCTION

☒ FULL RELEASE
THIS DRAWING IS FULLY RELEASED BY THE ARCHITECT FOR CONSTRUCTION OF THIS PROJECT ONLY

COPYRIGHT ©
CAPITAL AREA TRANSIT SYSTEM
ALL RIGHTS RESERVED
NOT TO BE COPIED OR REPRODUCED WITHOUT EXPRESSED WRITTEN CONSENT OF CAPITAL AREA TRANSIT SYSTEM

SHEET NO.
ATTACHMENT "T"
SHEET OF

PERKINS RD. @ COLLEGE DR. AUTO ZONE - W

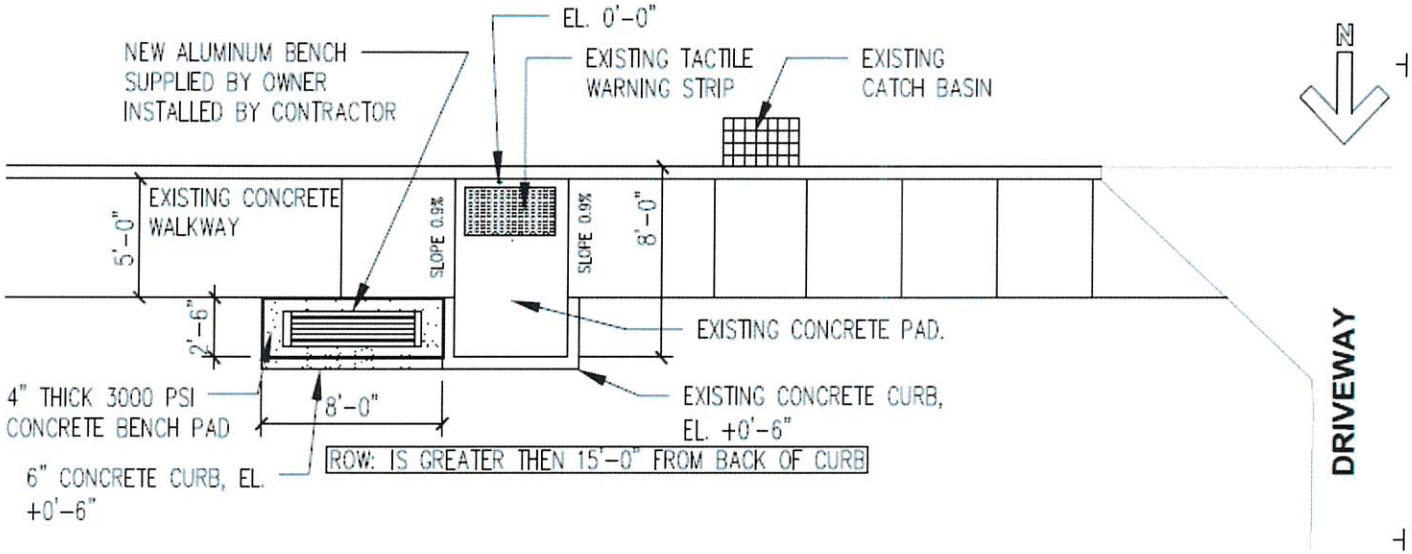

5 / BR-3 PERKINS RD. @ COLLEGE DR. AUTO ZONE – W

SCALE: 1/8"=1'-0"

ADDENDUM 1,
ATTACHMENT "U"

CAPITAL AREA TRANSIT SYSTEM

CATS

2250 FLORIDA BLVD
BATON ROUGE, LA
70802

CATS ADA ACCESSIBLE BUS STOP IMPROVEMENT PROJECT

BATON ROUGE, LOUISIANA

SOLICITATION # 2026-ADABUSPADS-001

ISSUE	
DATE	FOR
-	-
-	-

PROJECT NO:

DATE: 08-18-2026

BY:

CHECKED:

☐ PROGRESS PRINT
NOT FOR CONSTRUCTION

☒ FULL RELEASE
THIS DRAWING IS FULLY RELEASED BY THE ARCHITECT FOR CONSTRUCTION OF THIS PROJECT ONLY

COPYRIGHT ©
CAPITAL AREA TRANSIT SYSTEM
ALL RIGHTS RESERVED.
NOT TO BE COPIED OR REPRODUCED WITHOUT EXPRESSED WRITTEN CONSENT OF CAPITAL AREA TRANSIT SYSTEM

SHEET NO.
ATTACHMENT "U"
SHEET OF

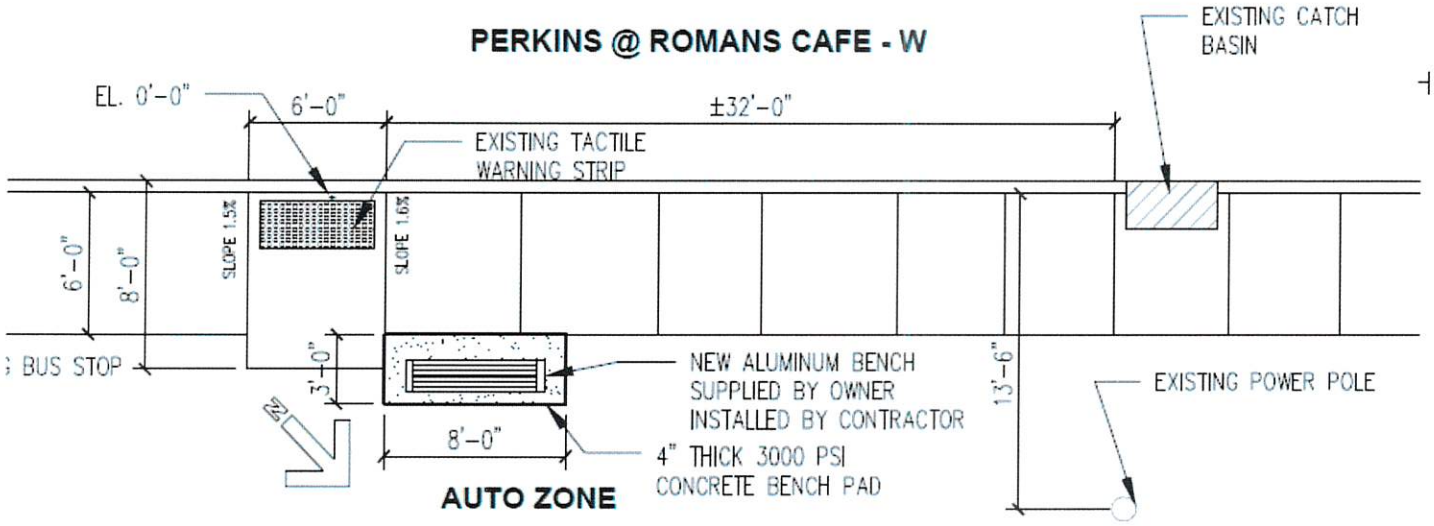

6 / BR-3 PERKINS RD. @ ROMANS CAFE/ AUTO ZONE – W

SCALE: 1/8"=1'-0"

ADDENDUM 1, ATTACHMENT "V"

CAPITAL AREA TRANSIT SYSTEM

CATS

2250 FLORIDA BLVD
BATON ROUGE, LA
70802

CATS ADA ACCESSIBLE BUS STOP IMPROVEMENT PROJECT
BATON ROUGE, LOUISIANA
SOLICITATION # 2026-ADABUSPADS-001

ISSUE	
DATE	FOR
-	-
-	-

PROJECT NO:
DATE: 08-18-2026
BY:
CHECKED:

☐ PROGRESS PRINT
NOT FOR CONSTRUCTION

☒ FULL RELEASE
THIS DRAWING IS FULLY RELEASED BY THE ARCHITECT FOR CONSTRUCTION OF THIS PROJECT ONLY

COPYRIGHT ©
CAPITAL AREA TRANSIT SYSTEM
ALL RIGHTS RESERVED.
NOT TO BE COPIED OR REPRODUCED WITHOUT EXPRESSED WRITTEN CONSENT OF CAPITAL AREA TRANSIT SYSTEM

SHEET NO.
ATTACHMENT "V"
SHEET OF

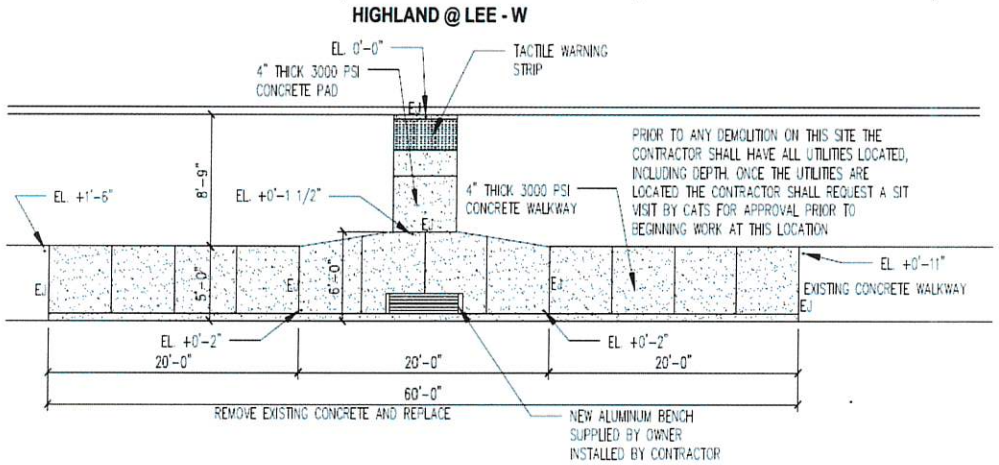

1 HIGHLAND @ LEE – W
SCALE: 1/8"=1'-0"

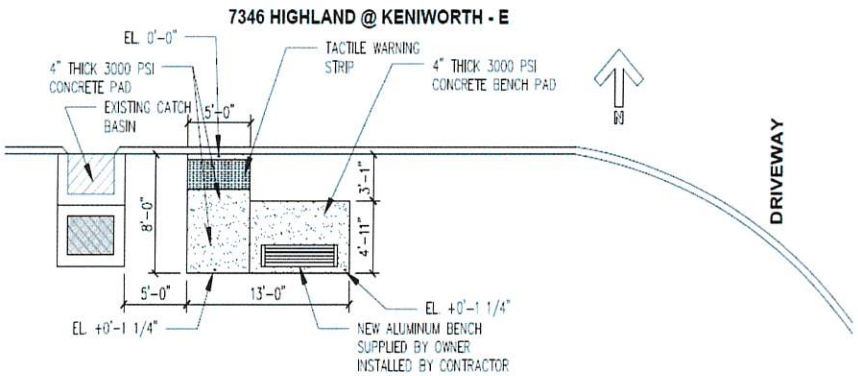

2 HIGHLAND @ KENIWORTH – E
SCALE: 1/8"=1'-0"

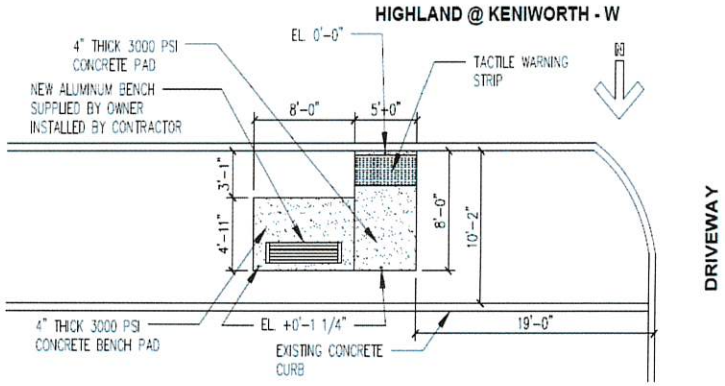

3 HIGHLAND @ KENIWORTH – W
SCALE: 1/8"=1'-0"

ADDENDUM 1,
ATTACHMENT "AA"

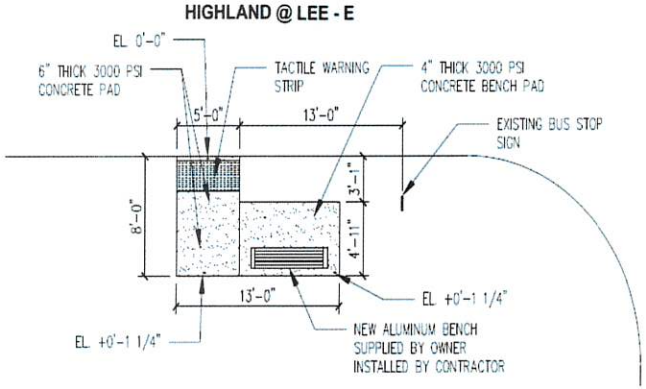

4 HIGHLAND @ LEE – E
SCALE: 1/8"=1'-0"

CAPITAL AREA TRANSIT SYSTEM
CATS
3250 FLORIDA BLVD.
BATON ROUGE, LA
70801

CATS ADA ACCESSIBLE BUS STOP IMPROVEMENT PROJECT

BATON ROUGE, LOUISIANA
SOLICITATION # 2026-ADABUSPADS-001

ISSUE	
DATE	FOR
06-19-2026	ADDENDUM 1

PROJECT NO.
DATE 06-19-2026
BY
CHECKED

☐ PROGRESS PRINT
NOT FOR CONSTRUCTION

☒ FULL RELEASE
THIS DRAWING IS FULLY RELEASED BY THE ARCHITECT FOR CONSTRUCTION OF THIS PROJECT ONLY

COPYRIGHT © CAPITAL AREA TRANSIT SYSTEM

ALL RIGHTS RESERVED
NOT TO BE COPIED OR REPRODUCED WITHOUT EXPRESSED WRITTEN CONSENT OF CAPITAL AREA TRANSIT SYSTEM

SHEET NO.
BR-16
SHEET OF

GENERAL PROVISIONS

- All Temporary Traffic Control (TTC) Devices used shall be in accordance with the City–Parish Standard Specifications for Public Works Construction, the current edition of the Manual on Uniform Traffic Control Devices (MUTCD), and the requirements of the National Cooperative Highways Research Program (NCHRP) 350 for Test Level 3. The MUTCD is available at http:mutcd.fhwa.dot.gov/
- The Contractor shall provide one or more authorized Traffic Control Supervisor (TCS) in accordance with the Standard Specifications.
- Materials used for Temporary Traffic Controls shall be in accordance with the City–Parish Standard Specifications for Public Works Construction and when applicable the City–Parish Qualified Products List (C–P QPL).
- No temporary traffic controls shall be erected without the approval of the City–Parish Traffic Engineer and until work is about to begin, unless they are covered.
- No lane closures, lane shifts, diversions, or detours shall occur without the authorization of the City–Parish Traffic Engineer.
- Responsibility is hereby placed upon the contractor for the installation, maintance, and operation of all temporary traffic control devices called for in these plans or required by the Project Engineer for the protection of the traveling public as well as all Department and construction personal. All reflective devices such as signs, drums, barricades, vertical panels, delinectors of any type, etc. shall be cleaned or washed periodically to maintain their effectiveness, as required by conditions or Project Engineer.
- The contractor shall also be responsible for the maintenance of all permanent signs and pavement markings left in place as essential to the safe movement and guidance of traffic within the project limits.
- The City–Parish Traffic Engineer shall serve as a technical advisor to the Project Engineer for all Traffic Control matters.
- "Road Work XX Miles" sign shall be required on all projects and located at beginning of the project unless otherwise noted. The sign shall be a minimum Thirty–Six (36) inch X Sixty (60) inch unless otherwise noted.
- Warning signs used for lane closures or lane shifts in which the roadway shall be returned to full public use within Fourteen (14) hours or less may be placed on NCHRP350 approved portable sign frames.
- The City–Parish will approve any detour route marking required to guide travelers around the construction area, but the contractor will be responsible for the required signage.

SPEED LIMITS

- Speed limits shall be lowered by Ten (10) mph for any construction, maintenance, or utility operation that requires one or more of the following: (A) the condition of the original highway is degraded due to milled surfaces or uneven pavements; (B) work is in progress in the immediate vicinity of the travel way requiring lane closures, lane width reductions, or low speed diversions; (C) workers present on the shoulder within Two (2) ft of the edge of traveled way without barrier protection.
- The reduced speed zone shall only apply to those portions of the project limits affected. The Project Engineer may allow SPEED LIMIT WHEN FLASHING signs to supplement reduced speed zones.
- At the end of the reduced speed zone, a speed limit sign displaying the original speed limit before construction shall be installed.
- If conditions warrant, the City–Parish Traffic Engineer may authorize the reduction of the speed limit by more than Ten (10) mph.

PAVEMENT MARKINGS (see C–P QPL)

- All pavement markings within the limits of the project that are in conflict with the project signing or the required traffic movements shall be removed from the pavement by blast cleaning or grinding (Existing striping shall not be painted over with black paint or covered with tape).
- If special pavement markings are needed, they shall be reflectorized, removable, and accompanied by the proper signage.
- Temporary Raised Pavement Markers (RPMs) may be added to supplement temporary striping in areas of transition, in tapers, in detours, and in other areas of need as directed by the Project Engineer.
- Materials and placement of temporary pavement markings shall conform to Section 905 of the Standard Specifications. If no pay item exists, temporary markings will be considered incidental to traffic control.

SIGNS

- All signs used for temporary traffic controls shall follow the Department's Standard Plans and the MUTCD. Signs shown in the Standard Plan illustrations are typical and may vary with each specific condition.
- More appropriate signing for a specific condition may be required or substituted with the approval of the Project Engineer and reviewed by the City–Parish Traffic Engineer.
- When projects are separated by less than one mile, they shall be signed as one project.
- At no time shall signs warning against a particular operation be left in place once the operation has been completed or where the obstacle has been removed.
- Signs over Ten (10) sq ft shall be mounted on two post and signs over Twenty (20) sq ft shall be mounted on at least three post.
- Signs shall have a minimum of Two (2) bolts per post.
- Permanent signs no longer applicable or in conflict shall be removed or covered with a strong, lightweight, opaque material.
- Warning signs used for temporary traffic controls shall meet the following guidelines unless otherwise noted in the plans: (A) size shall be Forty–Eight (48) ft X Forty–Eight (48) ft, (B) see the Departments Standard Specifications and the C–P QPL for sheeting information, (C) a minimum of a Two (2) lb U–Channel post may be used driven to a minimum depth of Three (3) ft, (D) sign height shall be a minimum of Five (5) ft above the roadway surface unless there is a concern for pedestrians or bicycle traffic in which it shall be a minimum of Seven (7) ft, (E) lateral distance of signs shall be a minimum of Six (6) ft from the edge of shoulder or edge of pavement if no shoulder exist and Two (2) ft from the back of curb in urban areas.
- Vinyl Roll Up signs will be allowed for short term (less than Twelve (12) hours) daytime work provided that they meet all size, color, retroreflectivity requirements, and NCHRP 350.
- Mesh rollup signs shall not be allowed on any project.
- All signs shall be removed or covered when no longer applicable.
- Contractor shall use caution not to damage existing signs which remain in place. Any signs damaged by work operations shall be replaced at the Contractor's expense.

CHANNELIZING DEVICES

- The following devices may be used: Tubular Markers, Vertical panels, Cones, Drums, and Super Cones. Drums (at standard spacing) and Super Cones (at 1/2 Standard spacing) are the only devices allowed to be used in taper area on the interstate system during daylight hours. Only drums can be used in tapers during night operations.
- Retroreflective material pattern used on super cones shall match that used on drums and conform to Section 1020–1.2(C) of the Standard Specifications.
- Spacing of channelizing devices such as cones, panels, drums, and Type I or II barricades shall not exceed a distance in feet equal to the speed limit when used for taper channelization and a distance in feet of twice the speed limit when used for tangent channelization.
- Twenty–Eight (28) inch traffic cones are not allowed on: 1) interstates, 2) Highways with speeds greater than Forty (40) mph.
- During night time operations: 1) Twenty–Eight (28) inch and Thirty–Six (36) inch cones are not allowed, 2) drums are the only device allowed in the taper.

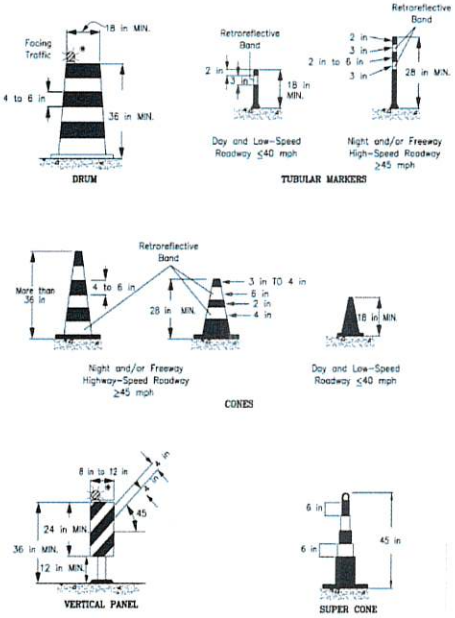

* Warning light (optional)

BARRICADES

- Barricades shall be designed and applied in accordance with these Standard Plans and the current MUTCD guidance. Generally three types of barricades are used as below. Specific project applications shall be reviewed and approved by the City–Parish Traffic Engineer and shall not deployed without such approval.
- Steady burn lights shall be used when barricades are used in a series for channelization.
- Type I barricades shall be used on low speed roads or urban streets.
- Type II barricades shall be used on high speed roads.
- Type III barricades shall be used to close a road section to traffic and shall extend completely across a roadway and its shoulders or from curb to curb.
- When signs and lights are to be mounted to a barricade, they must meet NCHRP 350 requirements.

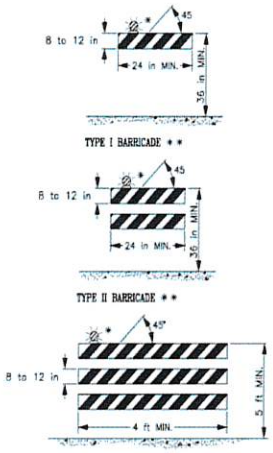

* Warning light (optional)

** Rail stripe widths shall be Six (6) inch, except that Four (4) inch wide stripes may be used if rail lengths are less than Thirty–Six (36) inch. The sides of barricades facing traffic shall have retroreflective rail faces.

ADDENDUM 1,
ATTACHMENT "BB"

CAPITAL AREA TRANSIT SYSTEM
CATS
2250 FLORIDA BLVD.
BATON ROUGE, LA
70802

CATS ADA ACCESSIBLE BUS STOP IMPROVEMENT PROJECT

BATON ROUGE, LOUISIANA
SOLICITATION # 2026-ADABUSPADS-001

ISSUE	
DATE	FOR
05-19-2026	PERMIT SUBMITTAL
6-29-2026	PERMIT RESUBMITTAL
7-7-2026	BID DOCUMENTS

PROJECT NO:
DATE: 05-19-2026
BY:
CHECKED:

☐ PROGRESS PRINT
NOT FOR CONSTRUCTION

☒ FULL RELEASE
THIS DRAWING IS FULLY RELEASED BY THE ARCHITECT FOR CONSTRUCTION OF THIS PROJECT ONLY

COPYRIGHT ©
CAPITAL AREA TRANSIT SYSTEM

ALL RIGHTS RESERVED
NOT TO BE COPIED OR REPRODUCED WITHOUT EXPRESSED WRITTEN CONSENT OF CAPITAL AREA TRANSIT SYSTEM

SHEET NO.
17
SHEET OF

LIGHTING

- All temporary lighting shall be LED.
- Lighting shall supplement barricades that close one or more lanes or that extends across the roadway. A minimum of two lights will be used, but where a travel way ends immediately after a barricade, a minimum of Four (4) lights shall be used. Lighting shall be by approved electrical installations. Battery operated equipment shall conform to NCHRP 350.
- High intensity flashing lights shall be used to mark the first advance warning sign.
- Low intensity flashing lights shall be used to mark all other hazards off the travel way.
- Steady burning lights shall be used on all traffic control devices used for channelizations.
- Flashing units will be mounted as high as possible and battery compartments shall be mounted Six (6) inches from the ground.

PORTABLE CHANGEABLE MESSAGE SIGNS

- When working within the traveled way, including shoulders and auxiliary lanes. Changeable Message Signs (CMS) shall be used on all Interstate Highways and on all other roadways (where space is available) with an ADT greater than Twenty Thousand (20,000) and should be delineated with retroreflective TTC devices.
- When used in advance of a lane closure or a lane shift, the CMS should be placed on the right hand side of the road a minimum distance of Two (2) miles in advance of the taper for Interstates and to be determined by the City-Parish Traffic Engineer on other roadways.
- CMS messages shall be approved by the City-Parish Traffic Engineer.
- When Portable Changeable Message signs are not being used, they should be removed; if not removed, they should be shielded by guardrail or barriers; or if the previous Two (2) options are not feasible, they should be delineated with retroreflective TTC devices.

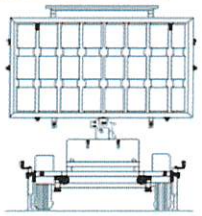

FLAGGERS

- All flaggers must be qualified. The contractor shall be responsible for training or assuring that all flaggers are qualified to perform flagging duties. A certificate indicating completion of a flagger training course shall be available to the engineer if requested. A Qualified Flagger is one that has attended courses such as those offered by the American Traffic Safety Services Association (ATSSA) or other courses approved by the City-Parish.
- When utilized, a flagger shall use a minimum Eighteen (18) inch sign on a minimum Six (6) ft stop/slow paddle and wear ANSI Class 2 vest during day time operations and ANSI Class 3 ensemble during night operations. In all flagging operations, the flagger must be visible from flagger advance warning sign.
- Flagger stations shall be in a highly visible location far enough in advance of the work site so that approaching traffic will have sufficient distance to reduce speed before entering the project. 200-300 feet is desirable. In urban areas, the advances distance may be decreased.

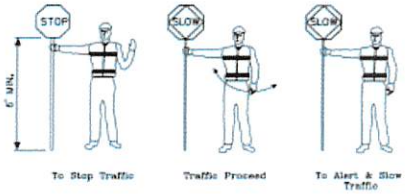

USE OF HAND SIGN

FLASHING ARROW PANELS

- Flashing Arrow Panels shall be used for lane closures on all facilities with Two (2) or more lanes in a single direction and a speed limit greater than Thirty-Five (35) mph.
- When used, flashing arrow panels should be located on the shoulder at the beginning of the taper.
- Where the shoulder width is limited, the flashing arrow panel should be placed within the closed lane as close to the beginning of the taper as practical.
- All Flashing Arrow Panels shall be Four (4) ft x Eight (8) ft Type C with LED lighting.
- When Flashing Arrow Panels signs are not being used, they should be removed; if not removed, they should be shielded by guardrail or barriers; or if the previous two options are not feasible, they should be delineated with retroreflective TTC devices.

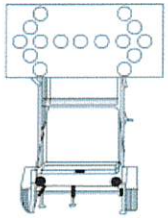

ALLOWABLE LAP SPLICE FOR U-CHANNELL POST

U-channel posts may be spliced where long length are required. The upper section shall overlap the lower section by at least Twenty-Four (24) inches. The bottom edge of the upper section of the splice shall be a minimum of Twenty-Four (24) inches above the ground. The spliced sections shall be secured with at least Four (4) 5/16 inch diameter hexhead bolts spaced equally along the splice.

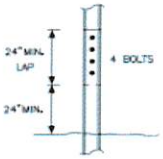

Front View

HIGHWAY-RAIL GRADE CROSSING

1. When a highway-rail grade crossing exists within or upstream of the merging taper and it is anticipated that backups resulting from the lane closure might extend through the highway-rail grade crossing, the TTC zone should be extended so that the merging taper precedes the highway-rail grade crossing.
2. When a highway-rail grade crossing exists within the activity area, provisions should be made to provide road users operating on the left side of the normal centerline with comparable warning devices as supplied for road users operating on the right side of the normal centerline.
3. When a highway-rail grade crossing exists within the activity area, early coordination with the railroad company should occur before work starts.
4. When a highway-rail grade crossing exists within the activity area, a flagger may be used at the highway-rail grade crossing to minimize the probability that vehicles are stopped within fifteen (15) ft of the highway-rail grade crossing, measured from both sides of the outside rails.
5. A truck-mounted attenuator may be used on the work vehicle and/or the shadow vehicle.

ADDENDUM 1,
ATTACHMENT "CC"

CAPITAL AREA TRANSIT SYSTEM
CATS
2350 FLORIDA BLVD
BATON ROUGE, LA
70802

CATS ADA ACCESSIBLE BUS STOP IMPROVEMENT PROJECT
BATON ROUGE, LOUISIANA
SOLICITATION # 2026-ADABUSPADS-001

ISSUE	
DATE	FOR
05-18-2026	ADDENDUM 1

PROJECT NO:
DATE: 05-18-2026
BY:
CHECKED:

☐ PROGRESS PRINT
NOT FOR CONSTRUCTION

☒ FULL RELEASE
THE DRAWINGS ARE FULLY REVIEWED BY THE ARCHITECT FOR CONSTRUCTION OF THE PROJECT ONLY

COPYRIGHT © CAPITAL AREA TRANSIT SYSTEM

ALL RIGHTS RESERVED
NO PART OF THIS DOCUMENT MAY BE REPRODUCED WITHOUT EXPRESSED WRITTEN CONSENT OF CAPITAL AREA TRANSIT SYSTEM

SHEET NO.
18
SHEET OF

Suggested Advance Warning Sign Spacing

Road Types	Distance Between Signs*		
	A	B	C
Urban (40 mph or less)	100	100	100
Urban (45 mph or more)	350	350	350
Rural	500	500	500

* Distances are shown in feet. The column headings A, B, and C are the dimensions shown in Typical Application Figures. The A dimension is the distance from the transition or point of restriction to the first sign. The B dimension is the distance between the first and second signs. The C dimension is the distance between the second and third signs. (The third sign is the first one in a three-sign series encountered by a driver approaching a TTC zone.)

Formulas for Determining Taper Lengths

Speed Limit (S)	Taper Length (L) Feet
40 mph or less	$L = \frac{WS^2}{60}$
45 mph or more	$L = WS$

Where:
L = taper length in feet
W = width of offset in feet
S = posted speed limit in mph.

Meaning of Symbols on Typical Application Diagrams

- Arrow panel
- Arrow panel support or trailer (shown facing down)
- Changeable message sign or support trailer
- Channelizing device
- Crash Cushion
- Direction of temporary traffic detour
- Direction of traffic
- Flagger
- High level warning device (Flag tree)
- Luminaire
- Pavement markings that should be removed for a long term project
- Sign (shown facing left)
- Surveyor
- Temporary barrier
- Temporary barrier with warning lights
- Traffic or Pedestrian signal
- Truck mounted attenuator
- Type III Barricade
- Warning lights
- Work space
- Work vehicle

Index to Typical Applications

Typical Application Description	Typical Application Number	Standard Plan Number
Work Outside of Shoulder		
Work Beyond the Shoulder	TA-1	905-03
Work on the Shoulder		
Work on Shoulders	TA-3	905-03
Shoulder Work with Minor Encroachment	TA-6	905-04
Work Within the Traveled Way of Two-Lane Highways		
Road Closed with Diversion	TA-7	905-04
Road Closed with Off-Site Detour	TA-8	905-05
Lane Closure on Two-Lane Road Using Flaggers	TA-10	905-05
Lane Closure on Two-Lane Road with Low Traffic Volumes	TA-11	905-06
Temporary Road Closure	TA-13	905-06
Mobile Operations on Two-Lane Road	TA-17	905-07
Work Within the Traveled Way of Urban Streets		
Lane Closure on Minor Street	TA-18	905-07
Detour for One Travel Direction	TA-19	905-08
Detour for Closed Street	TA-20	905-08
Work Within the Traveled Way at an Intersection and Sidewalks		
Multiple Lane Closures at Intersection	TA-25	905-09
Crosswalk Closures and Pedestrian Detours	TA-29	905-09
Work Within the Traveled Way of Multi-lane, Non-access Controlled Highways		
Interior Lane Closure on Multi-lane Street	TA-30	905-10
Half Road Closure on Multi-lane, High-Speed Highway	TA-32	905-10
Lane Closure on Divided Highway	TA-33	905-11
Work in the Vicinity of Highway-Rail Grade Crossings		
Work in Vicinity of Highway-Rail Grade Crossing	TA-46	905-11

Information contained herewith was taken directly from the MUTCD 2003 version.

ADDENDUM 1,
ATTACHMENT "DD"

CAPITAL AREA TRANSIT SYSTEM
CATS
2350 FLORIDA BLVD.
BATON ROUGE, LA

CATS ADA ACCESSIBLE BUS STOP IMPROVEMENT PROJECT
BATON ROUGE, LOUISIANA
SOLICITATION # 2026-ADABUSPADS-001

ISSUE	
DATE	FOR
03-18-2026	ADDENDUM 1

PROJECT NO:
DATE: 03-18-2026
BY:
CHECKED:

☐ PROGRESS PRINT
NOT FOR CONSTRUCTION

☒ FULL RELEASE
THIS DRAWING IS FULLY RELEASED FOR THE INDICATED PURPOSE(S) OF CONSTRUCTION OF THIS PROJECT ONLY

COPYRIGHT © CAPITAL AREA TRANSIT SYSTEM
ALL RIGHTS RESERVED
NOTICE: THIS DOCUMENT IS THE PROPERTY OF THE CAPITAL AREA TRANSIT SYSTEM. REPRODUCTION OR TRANSMITTAL IN WHOLE OR IN PART, WITHOUT THE WRITTEN PERMISSION OF THE CAPITAL AREA TRANSIT SYSTEM IS PROHIBITED.

SHEET NO.
19
SHEET OF

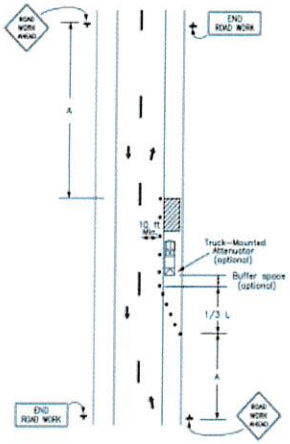

Figure TA-6
Shoulder Work with Minor Encroachment

NOTES:

1. All lanes should be a minimum of Ten (10) ft in width as measured to the near face of the channelizing devices.
2. The treatment shown should be used on a minor road having low speeds. For higher-speed traffic conditions, a lane closure should be used.
3. For short-term use on low-volume, low-speed roadways with vehicular traffic that does not include longer and wider heavy commercial vehicles, a minimum lane width of Nine (9) ft may be used.
4. Where the opposite shoulder is suitable for carrying vehicular traffic and of adequate width, lanes may be shifted by use of closely spaced channelizing devices, provided that the minimum lane width of Ten (10) ft is maintained.
5. Additional advance warning may be appropriate, such as a ROAD NARROWS sign.
6. Temporary traffic barriers may be used along the work space.
7. The shadow vehicle may be omitted if a taper and channelizing devices are used.
8. A truck-mounted attenuator may be used on the shadow vehicle.
9. For short-duration work, the taper and channelizing devices may be omitted if a shadow vehicle with activated high-intensity rotating, flashing, oscillating, or strobe lights is used.
10. Vehicle hazard warning signals may be used to supplement high-intensity rotating, flashing, oscillating, or strobe lights.
11. Vehicle hazard warning signals shall not be used instead of the vehicle's high-intensity rotating, flashing, oscillating, or strobe lights.

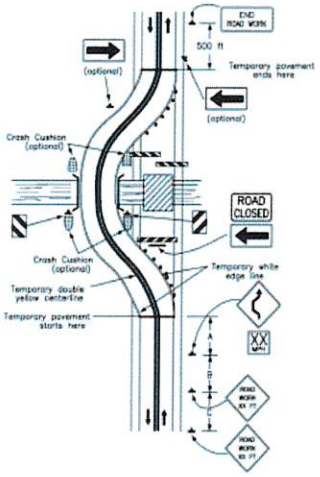

Figure TA-7
Road Closed with Diversion

NOTES:

1. Sign and object markers are shown for one direction of travel only.
2. Devices similar to those depicted shall be placed for the opposite direction of travel.
3. Pavement markings no longer applicable shall be removed or obliterated as soon as practicable.
4. Temporary barriers and end treatments shall be crashworthy.
5. If the tangent distance along the temporary diversion is more than Six Hundred (600) ft, a Reverse Curve sign, left first, should be used instead of the Double Reverse Curve sign, and a second Reverse Curve sign, right first, should be placed in advance of the second reverse curve back to the original alignment.
6. When the tangent section of the diversion is more than Six Hundred (600) ft, and the diversion has sharp curves with recommended speeds of Thirty (30) mph or less, Reverse Turn signs should be used.
7. Where the temporary pavement and old pavement are different colors, the temporary pavement should start on the tangent of the existing pavement and end on the tangent of the existing pavement.
8. Flashing warning lights and/or flags may be used to call attention to the warning signs.
9. On sharp curves, large arrow signs may be used in addition to other advance warning signs.
10. Delineators or channelizing devices may be used along the diversion.

ADDENDUM 1,
ATTACHMENT "EE"

CAPITAL AREA TRANSIT SYSTEM
CATS
2100 FLORIDA BLVD
BATON ROUGE LA
70806

CATS ADA ACCESSIBLE BUS STOP IMPROVEMENT PROJECT
BATON ROUGE, LOUISIANA
SOLICITATION # 2026-ADABUSPADS-001

ISSUE	
DATE	FOR
03-18-2026	ADDENDUM 1

PROJECT NO:
DATE 05-19-2026
BY:
CHECKED:

☐ PROGRESS PRINT
NOT FOR CONSTRUCTION

☒ FULL RELEASE
THIS DRAWING IS FULLY RELEASED BY THE ARCHITECT FOR CONSTRUCTION OF THE PROJECT ONLY

COPYRIGHT © CAPITAL AREA TRANSIT SYSTEM

ALL RIGHTS RESERVED
NOTICE: THIS DOCUMENT IS PROPRIETARY AND CONFIDENTIAL. COPYING OR DISTRIBUTION OUTSIDE OF CAPITAL AREA TRANSIT SYSTEM IS PROHIBITED

SHEET NO. 20
SHEET OF