ST. TAMMANY PARISH

MICHAEL B. COOPER
PARISH PRESIDENT

NOTICE TO BIDDERS

ST. TAMMANY PARISH

Sealed bids will be received by the Department of Procurement, until 2:00 p.m., **Wednesday, August 21, 2024,** and then opened and read publicly at that time by the Procurement Staff for the following project:

Bid # 24-31-2– West St. Tammany Regional Sewer Treatment Facility

Each paper bid must be submitted in a sealed envelope. The outside of the envelope shall show the Name and Address of the Bidder, the State Contractor's License Number of the Bidder (if the work is estimated at $50k or more), the Bid Name and the Bid Number.

The project classification is:

Municipal & Public Work Construction

This bid package is available online at www.bidexpress.com or LaPAC https://wwwcfprd.doa.louisiana.gov/osp/lapac/pubmain.cfm. It is the Vendor's responsibility to check Bid Express, or LaPAC frequently for any possible addenda that may be issued. The Parish is not responsible for a Vendor's failure to download any addenda documents required to complete a submission.

Bids will be received at 21454 Koop Dr., Suite 2F, Mandeville, LA 70471 from each bidder or his agent and given a written receipt, by certified mail with return receipt requested, or electronically at www.bidexpress.com.

A Non-Mandatory pre-bid meeting will be held at St. Tammany Parish Government Office Complex, Building "B" 21454 Koop Dr. Mandeville, LA 70471, 3rd Floor Staff Conference Room on Wednesday, July 31, 2024, from 2:00 PM to 4:00 PM. Attendance is strongly encouraged.

Procurement Department

BID PROPOSAL

ST. TAMMANY PARISH
GOVERNMENT

BID PACKAGE FOR

WEST ST. TAMMANY REGIONAL SEWER TREATMENT FACILITY

BID NO.: 24-31-2

JUNE 2024

Section 01

Table of Contents

Section 01	Table of Contents
Section 02	Instructions to Bidders
Section 03	Summary of Work
Section 04	LA Uniform Public Work Bid Form/ Unit Price Form
Section 05	Affidavits, Louisiana (Pursuant to LSA-R.S. 38:2224, 38:2227 and 38:2212.10)
Section 06	Insurance Requirements
Section 07	Project Sign
Section 08	General Conditions
Section 09	Sample Corporate Resolution
Section 10	Sample Certificate of Insurance
Section 11	Sample Contract
Section 12	Federal Clauses
Section 13	Technical Specifications
Section 14	Construction Drawings

Section 02

Instructions to Bidders

Bidders are urged to promptly review the requirements of this specification and submit questions for resolution as early as possible during the bid period. Questions or concerns must be submitted in writing to the Procurement Department no later than 2:00 CST seven (7) working days prior to the bid opening date. Otherwise, this will be construed as acceptance by the bidders that the intent of the specifications is clear and that competitive bids may be obtained as specified herein. Protests with regard to the specification documents will not be considered after bids are opened.

1. Bid security is required. Be sure that your bid includes such security as is necessary to meet Parish requirements and is properly signed. The bid must be fully completed. All applicable Louisiana license numbers must be affixed.

2. The Owner is the St. Tammany Parish Government (the "Parish").

3. The terms "he/his" and "it/its" may be used interchangeably.

4. The terms "Owner," the "Parish," and "St. Tammany Parish" may be used interchangeably.

5. The successful Bidder understands the limited contract time in the contract is **two hundred-seventy (270) calendar days**, and shall submit any request for an extension of time in accordance with the General and Supplementary Conditions. Said request will reflect the days requested and the reason for same. No extension request is guaranteed or absolute.

6. Bidder specifically understands that acknowledgment of the General Conditions is required. Bidder specifically understands that signature of receipt of the General Conditions is mandated. **The Bidder's signature on the "Louisiana Uniform Public Work Bid Form" will serve as acknowledgment of the Bidder's receipt and understanding of the General Conditions as well as any Supplementary Conditions.**

7. ***If any additional work*** **is performed by the contractor without *written* *approval* by owner, the cost of the work will be borne by the contractor and will not be reimbursed by the Parish.**

8. **Only** the Louisiana Uniform Public Bid Form, the Unit Price Form (if necessary), the bid security, and written evidence of authority of person signing the bid shall be submitted on or before the bid opening time and date provided for in the Bid Documents. Necessary copies of the Louisiana Uniform Public Work Forms and Unit Price Forms (if necessary) will be furnished for Bidding. Bound sets of the Contract Documents are for Bidder's information and should not be used in submitting Bids.

9. All other documents and information required are to be submitted by the low Bidder within ten (10) days after the opening of the bids, and at the same time of day and location as given for the opening of the bids in the Bid Documents.

10. Each Bid must be submitted in a sealed envelope, unless submitted electronically. The outside of the envelope shall show the name and address of the Bidder, the State Contractor's License Number of the Bidder (if work requires contractor's license), and the Project name and the Bid number. In the case of an electronic bid proposal, a contractor may submit an authentic digital signature on the electronic bid proposal accompanied by the contractor's license number, Project name and the Bid number.

11. The price quoted for the Work shall be stated in words and figures on the Bid Form, and in figures only on the Unit Price Form. The price in the Bid shall include all costs necessary for the complete performance of the Work in full conformity with the conditions of the Contract Documents, and shall include all applicable Federal, State, Parish, Municipal or other taxes. The price bid for the items listed on the Unit Price Form will include the cost of all related items not listed, but which are normally required to do the type of Work bid.

12. The Bid shall be signed by the Bidder. The information required on the Louisiana Uniform Public Work Bid Form must be provided. Evidence of agency, corporate, or partnership authority is required and shall be provided in conformance with LSA-R.S. 38:2212(B).

13. Only a Contractor licensed by the State to do the type of Work as indicated on the Notice to Bidders can submit a Bid. The Bidder's signature on the Bid Form certifies that he holds an active license under the provisions of Chapter 24 of Louisiana Revised Statutes Title 37. Failure to be properly licensed constitutes authority for the Owner to reject the Bid.

14. Bidders shall not attach any conditions or provisions to the Bid. Any conditions or provisions so attached may, at the sole option of the Owner, cause rejection of the Bid.

15. A Bid Guarantee of five percent (5%) of the amount of the total Bid, including Alternates, must accompany the Proposal and, at the option of the Bidder, may be a cashier's check, certified check or a satisfactory Bid Bond. The Bid Guarantee must be attached to the Louisiana Uniform Public Work Bid Form. No Bid will be considered unless it is so guaranteed. Cashier's check or certified check must be made payable to the order of the Owner. Cash deposits will not be accepted. The Owner reserves the right to cash or deposit the cashier's check or certified check. Such guarantees shall be made payable to the Parish of St. Tammany. In accordance with LSA-R.S. 38:2218(C), if a bid bond is used, it shall be written by a surety or insurance company currently on the U.S. Department of the Treasury Financial Management Service list of approved bonding companies which is published annually in the Federal Register, or by a Louisiana domiciled insurance company with at least an A- rating in the latest printing of the A.M. Best's Key Rating Guide to write individual bonds up to ten percent of policyholders' surplus as shown in the A.M. Best's Key Rating Guide or by an insurance company in good standing licensed to write bid bonds which is either domiciled in Louisiana or owned by Louisiana residents. It is **not** required to be on any AIA form.

16. Bid securities of the three (3) lowest Bidders will be retained by the Owner until the Contract is executed or until final disposition is made of the Bids submitted. Bid securities of all other Bidders will be returned promptly after the canvas of Bids. Bids shall remain binding for forty-five (45) days after the date set for Bid Opening. The Parish shall act within the forty-five (45) days to award the contract to the lowest responsible bidder or reject all bids. However, the Parish and the lowest responsible bidder, by mutual written consent, may agree to extend the deadline for award by one or more extensions of thirty (30) calendar days. In the event the Owner issued the Letter of Award during this period, or any extension thereof, the Bid accepted shall continue to remain binding until the execution of the Contract.

17. A Proposal may be withdrawn at any time prior to the scheduled closing time for receipt of Bids, provided the request is in writing, executed by the Bidder or its duly authorized representative and is filed with the Owner prior to that time. When such a request is received, the Proposal will be returned to the Bidder unopened. A bid withdrawn under the provisions of LSA-R.S. 38:2214(C) cannot be resubmitted.

18. Written communications, over the signature of the Bidder, to modify Proposals will be accepted and the Proposal corrected in accordance therewith if received by the Owner prior to the scheduled closing time for receipt of Bids. Oral, telephonic or telegraphic Modifications will not be considered.

19. No oral interpretation obligating the Owner will be made to any Bidder as to the meaning of the Drawings, Specifications and Contract Documents. Every request for such an interpretation shall be made in writing and addressed and forwarded to the Owner. Inquiries received within seven (7) days prior to the day fixed for opening of the Bids may not be given consideration. Every interpretation made to the Bidder shall be in the form of an addendum to the Specifications. All such Addenda shall become part of the Contract Documents. Failure of the Owner to send or failure of Bidder to receive any such interpretation shall not relieve any Bidder from any obligation under this Bid as submitted without Modification. All Addenda shall be issued in accordance with the Public Bid Law, LSA-R.S. 38:2212(O).

20. The Owner reserves the right to reject any or all Bids for just cause in accordance with the Public Bid Law, LSA-R.S. 38:2214(B). Incomplete, informal, illegible, or unbalanced Bids may be rejected. Reasonable grounds for belief that any one Bidder is concerned directly or indirectly with more than one Bid will cause rejection of all Bids wherein such Bidder is concerned. If required, a Bidder shall furnish satisfactory evidence of its competence and ability to perform the Work stipulated in its Proposal. Incompetence will constitute cause for rejection. If the Parish determines that the bidder is not responsive or responsible for any reason whatsoever, the bid may be rejected in accordance with State law.

21. Contractor shall be liable without limitation to the Parish for any and all injury, death, damage, loss, destruction, damages, costs, fines, penalties, judgments, forfeitures, assessments, expenses (including attorney fees), obligations, and other liabilities of every name and description, which may occur or in any way arise out of any act or omission of Contractor, its owners, agents, employees, partners or subcontractors.

22. Upon notice of any claim, demand, suit, or cause of action against the Parish, alleged to arise out of or be related to this Contract, Contractor shall investigate, handle, respond to, provide defense for, and defend at its sole expense, even if the claim, demand, suit, or cause of action is groundless, false, or fraudulent. The Parish may, but is not required to, consult with or assist the Contractor, but this assistance shall not affect the Contractor's obligations, duties, and responsibilities under this section. Contractor shall obtain the Parish's written consent before entering into any settlement or dismissal.

23. It is understood and agreed that neither party can foresee the exigencies beyond the control of each party which arise by reason of an Act of God or force majeure; therefore, neither party shall be liable for any delay or failure in performance beyond its control resulting from an Act of God or force majeure. The Parish shall determine whether a delay or failure results from an Act of God or force majeure based on its review of all facts and circumstances. The parties shall use reasonable efforts, including but not limited to, use of continuation of operations plans (COOP), business continuity plans, and disaster recovery plans, to eliminate or minimize the effect of such events upon the performance of their respective duties under this Contract.

24. Contractor shall fully indemnify and hold harmless the Parish, without limitation, for any and all injury, death, damage, loss, destruction, damages, costs, fines, penalties, judgments, forfeitures, assessments, expenses (including attorney fees), obligations, and other liabilities of every name and description, which may occur or in any way arise out of any act or omission of Contractor, its owners, agents, employees, partners or subcontractors. The Contractor shall not indemnify for the portion of any loss or damage arising from the Parish's act or failure to act.

25. Contractor shall fully indemnify and hold harmless the Parish, without limitation, from and against damages, costs, fines, penalties, judgments, forfeitures, assessments, expenses (including attorney fees), obligations, and other liabilities in any action for infringement of any intellectual property right, including but not limited to, trademark, trade-secret, copyright, and patent rights.

    When a dispute or claim arises relative to a real or anticipated infringement, the Contractor, at its sole expense, shall submit information and documentation, including formal patent attorney opinions, as required by the Parish.

    If the use of the product, material, service, or any component thereof is enjoined for any reason or if the Contractor believes that it may be enjoined, Contractor, while ensuring appropriate migration and implementation, data integrity, and minimal delays of performance, shall at its sole expense and in the following order of precedence: (i) obtain for the Parish the right to continue using such product, material, service, or component thereof; (ii) modify the product, material, service, or component thereof so that it becomes a non-infringing product, material, or service of at least equal quality and performance; (iii) replace the product, material, service, or component thereof so that it becomes a non-infringing product, material, or service of at least equal quality and performance; or, (iv) provide the Parish monetary compensation for all payments made under the Contract related to the infringing product, material, service, or component, plus for all costs incurred to procure and implement a non-infringing product, material, or service of at least equal quality and performance. Until this obligation has been satisfied, the Contractor remains in default.

    The Contractor shall not be obligated to indemnify that portion of a claim or dispute based upon the Parish's unauthorized: i) modification or alteration of the product, material or service; ii) use of the product, material or service in combination with other products not furnished by Contractor; or, iii) use of the product, material or service in other than the specified operating conditions and environment.

26. Bidders shall familiarize themselves with and shall comply with all applicable Federal and State Laws, municipal ordinances and the rules and regulations of all authorities having jurisdiction over construction of the Project, which may directly or indirectly affect the Work or its prosecution. These laws and/or ordinances will be deemed to be included in the Contract, as though herein written in full.

27. Each Bidder shall visit the site of the proposed Work and fully acquaint itself with all surface and subsurface conditions as they may exist so that it may fully understand this Contract. Bidder shall also thoroughly examine and be familiar with drawings, Specifications and Contract Documents. The failure or omission of any Bidder to receive or examine any form, instrument, Drawing or document or to visit the site and acquaint itself with existing conditions shall in no way relieve any Bidder from any obligation with respect to its Bid and the responsibility in the premises.

28. The standard contract form enclosed with the Proposal documents is a prototype. It is enclosed with the Contract Documents for the guidance of the Owner and the Contractor. It has important legal consequences in all respects and consultation with an attorney is encouraged. Contractor shall be presumed to have consulted with its own independent legal counsel.

29. When one set of Contract plans show the Work to be performed by two or more prime Contractors, it is the responsibility of each Bidder to become knowledgeable of the Work to be performed by the other where the Work upon which this bid is submitted is shown to come into close proximity or in conflict with the Work of the other. In avoiding conflicts, pressure pipe lines must be installed to avoid conflict with gravity pipe lines and the Bidder of the smaller gravity pipe line in conflict with the larger gravity pipe line must include in his Bid the cost of a conflict box at these locations. The location of and a solution to the conflicts do not have to be specifically noted as such on the plans.

30. Bidder shall execute affidavit(s) attesting compliance with LSA-R.S. 38:2212.10, 38:2224, 38:2227, each as amended, and other affidavits as required by law, prior to execution of the contract.

31. In accordance with Louisiana Law, all Corporations (See LA R.S. 12:26.1) and Limited Liability Companies (See LA R.S. 12:1308.2) must be registered and in good standing with the Louisiana Secretary of State in order to hold a contract.

32. Sealed Bids shall be delivered to St. Tammany Parish Government at the office of **St. Tammany Parish Government, Department of Procurement, 21454 Koop Drive, Suite 2-F, Mandeville, LA 70471**, and a receipt given, until the time and date denoted in Notice to Bidders, at which time and place the Bids shall be publicly opened and read aloud to those present. In accordance with LSA-R.S. 38:2212(H), the designer's final estimated cost of construction shall be read aloud upon opening bids. Sealed Bids may also be mailed by certified mail to **St. Tammany Parish Government, Department of Procurement, 21454 Koop Drive, Suite 2-F, Mandeville, LA 70471**, and must be received before the bid opening. Bids may also be submitted electronically. Information concerning links for electronic bidding is contained in the Notice to Bidders. It is the responsibility of the Bidders to ensure that bids are delivered in a timely fashion. **Late bids, regardless of reason, will not be considered, and will be returned to bidder.**

33. Paper bids shall be placed in a sealed envelope, marked plainly and prominently as indicated in the Notice to Bidders, and these Instructions, and addressed:

St. Tammany Parish Government
Department of Procurement
21454 Koop Drive, Suite 2-F
Mandeville, LA 70471

34. See Notice to Bidders for availability of Drawings, Specifications and Contract Documents via electronic methods.

35. The successful Bidder shall be required to post in each direction a public information sign, 4' x 4' in size, at the location of the project containing information required by the Owner. The Owner shall supply this information.

36. The award of the Contract, if it is awarded, will be to the lowest responsible Bidder, in accordance with State Law. No award will be made until the Owner has concluded such investigations as it deems necessary to establish the responsibility and qualifications of the Bidder to do the Work in accordance with the Contract Documents to the satisfaction of the Owner within the time prescribed as established by the Department based upon the amount of work to be performed and the conditions of same. The written contract and bond shall be issued in conformance with LSA-R.S. 38:2216. If the Contract is awarded, the Owner shall give the successful Bidder written notice of the award within forty-five (45) calendar days after the opening of the Bids in conformance with LSA-R.S. 38:2215(A), or any extension as authorized thereunder.

37. At least three days prior to the execution of the Contract, the Contractor shall deliver to the Owner the required Bonds.

38. Failure of the successful Bidder to execute the Contract and deliver the required Bonds within ten (10) days of the Notice of the Award shall be just cause for the Owner to annul the award and declare the Bid and any guarantee thereof forfeited. Award may then be made to the next lowest responsible bidder.

39. In order to ensure the faithful performance of each and every condition, stipulation and requirement of the Contract and to indemnify and hold harmless the Owner from any and all damages, either directly or indirectly arising out of any failure to perform same, the successful Bidder to whom the Contract is awarded shall furnish a Performance and Payment Bond in an amount of at least equal to one hundred percent (100%) of the Contract Price. The Contract shall not be in force or binding upon the Owner until such satisfactory Bond has been provided to and approved by the Parish. The cost of the Bond shall be paid for by the Contractor unless otherwise stipulated in the Special Provisions.

40. No surety Company will be accepted as a bondsman which has no permanent agent or representative in the State upon whom notices referred to in the General Conditions of these Specifications may be served. Service of said notice on said agent or representative in the State shall be equal to service of notice on the President of the Surety Company, or such other officer as may be concerned.

41. In conformance with LSA-R.S. 38:2219(A)(1)(a), (b), and (c):

> Any surety bond written for a public works project shall be written by a surety or insurance company currently on the U.S. Department of the Treasury Financial Management Service list of approved bonding companies which is published annually in the Federal Register, or by a Louisiana domiciled insurance company with at least an A- rating in the latest printing of the A.M. Best's Key Rating Guide, to write individual bonds up to ten percent of policyholders' surplus as shown in the A.M. Best's Key Rating Guide or by an insurance company that is either domiciled in Louisiana or owned by Louisiana residents and is licensed to write surety bonds.
>
> For any public works project, no surety or insurance company shall write a bond which is in excess of the amount indicated as approved by the U.S. Department of the Treasury Financial Management Service list or by a Louisiana domiciled insurance company with an A- rating by A.M. Best up to a limit of ten percent of policyholders' surplus as shown by A.M. Best; companies authorized by this Paragraph who are not on the treasury list shall not write a bond when the penalty exceeds fifteen percent of its capital and surplus, such capital and surplus being the amount by which the company's assets exceed its liabilities as reflected by the most recent financial statements filed by the company with the Department of Insurance.
>
> In addition, any surety bond written for a public works project shall be written by a surety or insurance company that is currently licensed to do business in the state of Louisiana. All contractors must comply with any other applicable provisions of LSA-R.S. 38:2219.

42. Should the Contractor's Surety, even though approved and accepted by the Owner, subsequently remove its agency or representative from the State or become insolvent, bankrupt, or otherwise fail, the Contractor shall immediately furnish a new Bond in another company approved by the Owner, at no cost to the Owner. The new Bond shall be executed under the same terms and conditions as the original Bond. The new bond shall be submitted within thirty (30) days of such time as the Owner notifies Contractor or from the time

Contractor learns or has reason to know that the original surety is no longer financially viable or acceptable to the Parish, whichever occurs first. In the event that Contractor fails or refuses to timely secure additional surety, then the Owner may secure such surety and thereafter deduct such cost or expense from any sum due, or to become due to Contractor.

43. The Contractor's bondsman shall obligate itself to all the terms and covenants of these Specifications and of contracts covering the Work executed hereunder. The Owner reserves the right to do Extra Work or make changes by altering, adding to deducting from the Work under the conditions and in the manner herein before described without notice to the Contractor's surety and without in any manner affecting the liability of bondsman or releasing it from any of its obligations hereunder.

44. The Bond shall also secure for the Owner the faithful performance of the Contract in strict accordance with plans, specifications, and other Contract Documents. It shall protect the Owner against all lien laws of the State and shall provide for payment of reasonable attorney's fees for enforcement of Contract and institution or concursus proceedings, if such proceedings become necessary. Likewise, it shall provide for all additional expenses of the Owner occurring through failure of the Contractor to perform.

45. The surety of the Contractor shall be and does hereby declare and acknowledge itself by acceptance to be bound to the Owner as a guarantor, jointly and in solido, with the Contractor, for fulfillment of terms of the Contract.

46. The performance Bond and Labor and Material Bond forming part of this Contract shall be continued by Contractor and its Surety for a period of one (1) year from date of acceptance of the Work/Project by Owner to assure prompt removal and replacement of all defective material, equipment, components thereof, workmanship, etc., and to assure payment of any damage to property of Owner or others as a result of such defective materials, equipment, workmanship, etc.

47. Contractor authorizes Parish to deduct from any payment due herein costs and service fees for recordation of this Contract in full or an excerpt hereof, or any revisions or modifications thereof as required by law. Contractor agrees to execute an excerpt or extract of this agreement for recordation purposes. If Contractor fails to execute such an excerpt, then the Parish shall file and record the entire Contract and all attachments at the expense of Contractor and Parish is hereby authorized to deduct all related costs from any proceeds due to the Contractor.

48. Contractor shall secure and maintain at its expense such insurance that will protect it and the Parish from claims for injuries to persons or damages to property which may arise from or in connection with the performance of Services or Work hereunder by the Contractor, his agents, representatives, employees, and/or subcontractors. The cost of such insurance shall be included in Contractor’s bid.

49. The Contractor shall not commence work until it has obtained all insurance as required for the Parish Project. If the Contractor fails to furnish the Parish with the insurance protection required and begins work without first furnishing Parish with a currently dated certificate of insurance, the Parish has the right to obtain the insurance protection required and deduct the cost of insurance from the first payment due the Contractor. Further deductions are permitted from future payments as are needed to protect the interests of the Parish including, but not limited to, renewals of all policies.

50. Payment of Premiums: The insurance companies issuing the policy or policies shall have no recourse against the Parish of St. Tammany for payment of any premiums or for assessments under any form of policy.

51. Deductibles: Any and all deductibles in the described insurance policies shall be assumed by and be at the sole risk of the Contractor.

52. Authorization of Insurance Company(ies) and Rating: All insurance companies must be authorized to do business in the State of Louisiana and shall have an A.M. Best rating of no less than A-, Category VII.

53. Policy coverages and limits must be evidenced by Certificates of Insurance issued by Contractor’s carrier to the Parish and shall reflect:

Date of Issue: Certificate must have current date.

Named Insured: The legal name of Contractor under contract with the Parish and its principal place of business shall be shown as the named insured on all Certificates of Liability Insurance.

Name of Certificate Holder: St. Tammany Parish Government, Office of Risk Management, P. O. Box 628, Covington, LA 70434

Project Description: A brief project description, including Project Name, Project Number and/or Contract Number, and Location.

Endorsements and Certificate Reference: All policies must be endorsed to provide, and certificates of insurance must evidence the following:

Waiver of Subrogation: The Contractor's insurers will have no right of recovery or subrogation against the Parish of St. Tammany, it being the intention of the parties that all insurance policy(ies) so affected shall protect both parties and be the primary coverage for any and all losses covered by the below described insurance. *Policy endorsements required for all coverages*.

Additional Insured: The Parish of St. Tammany shall be named as additional named insured with respect to general liability, marine liability, pollution/environmental liability, automobile liability and excess liability coverages. *Policy endorsements required.*

Hold Harmless: Contractor's liability insurers shall evidence their cognizance of the Hold Harmless and Indemnification in favor of St. Tammany Parish Government by referencing same on the face of the Certificate(s) of Insurance.

Cancellation Notice: Producer shall provide thirty (30) days prior written notice to the Parish of policy cancellation or substantive policy change.

54. The types of insurance coverage the Contractor is required to obtain and maintain throughout the duration of the Contract shall be designated by a separate document issued by the Office of Risk Management.

55. It is the intent of these instructions that they are in conformance with State Bid Laws. Should there be any discrepancy or ambiguity in these provisions, the applicable State Bid Law shall apply.

56. The letting of any public contract in connection with funds that are granted or advanced by the United States of America shall be subject to the effect, if any, of related laws of said United States and valid rules and regulations of federal agencies in charge, or governing use and payment of such federal funds.

57. Protests based on alleged solicitation improprieties that are apparent before bid opening, or the time set for receipt of initial proposals must be filed with and received by the Procurement Department BEFORE these times. Any other protest shall be filed no later than ten (10) calendar days after: the opening of the bid; the basis of the protest is known; or the basis of the protest should have been known (whichever is earlier).

58. It is the Parish's policy to provide a method to protest exclusion from a competition or from the award of a contract, or to challenge an alleged solicitation irregularity. It is always better to seek a resolution within the Parish system before resorting to outside agencies and/or litigation to resolve differences. All protests must be made in writing, and shall be concise and logically presented to facilitate review by the Parish. The written protest shall include:

The protester's name, address, and fax and telephone numbers and the solicitation, bid, or contract number;

A detailed statement of its legal and factual grounds, including a description of the resulting prejudice to the protester;

Copies of relevant documents;

All information establishing that the protester is an interested party and that the protest is timely; and

A request for a ruling by the agency; and a statement of the form of relief requested.

The protest shall be addressed to St. Tammany Parish Government Department of Procurement, P.O. Box 628, Covington, LA 70434

The protest review shall be conducted by the Parish Legal Department.

Only protests from interested parties will be allowed. Protests based on alleged solicitation improprieties that are apparent before bid opening, or the time set for receipt of initial proposals, must be filed with and received by the Department of Procurement BEFORE those deadlines.

Any other protest shall be filed no later than ten (10) calendar days after the basis of the protest is known, or should have been known (whichever is earlier).

The Parish will use its best efforts to resolve the protest within thirty (30) days of the date that it is received by the Parish. The written response will be sent to the protestor via mail and fax, if a fax number has been provided by the protestor. The protester can request additional methods of notification.

59. The last day to submit questions and/or verification on comparable products will be no later than 2:00 pm CST, seven (7) working days prior to the opening date of the bid/proposal due date. Further, any questions or inquires must be submitted via fax to 985-898-5227, or via email to Procurement@stpgov.org. Any questions or inquiries received after the required deadline to submit questions or inquiries will not be answered.

Schedule of Events

	Date	Time (CT)
Bid Due Date	August 21, 2024	2:00 PM
Inquiry Deadline	August 12, 2024	2:00 PM
Addendum Deadline	August 16, 2024	2:00 PM

NOTE: The Parish reserves the right to revise this schedule. Any such revision will be formalized by the issuance of an addendum to the Bid Request.

60. St. Tammany Parish Government contracts to be awarded are dependent on the available funding and/or approval by members designated and/or acknowledged by St. Tammany Parish Government. At any time, St. Tammany Parish Government reserves the right to cancel the award of a contract if either or both of these factors is deficient.

61. Any action by the Parish to disqualify any Bidder on the grounds that they are not a responsible Bidder shall be conducted in accordance with LSA-R.S. 38:2212(X).

62. Failure to complete or deliver within the time specified or to provide the services as specified in the bid or response will constitute a default and may cause cancellation of the contract. Where the Parish has determined the contractor to be in default. The Parish reserves the right to purchase any or all products or services covered by the contract on the open market and to charge the contractor with the cost in excess of the contract price. Until such assessed charges have been paid, no subsequent bid or response from the defaulting contractor will be considered.

63. If any part of the provisions contained herein and/or in the Specifications and Contract for the Work shall for any reason be held invalid, illegal or unenforceable in any respect, such invalidity, illegality or unenforceability shall not affect any other provisions of this Agreement or attachment, but it shall be construed as if such invalid, illegal, or unenforceable provision or part of a provision had never been contained herein.

Section 03

Summary of Work

I. Work to Include:

The work of this contract comprises the construction and installation of a new influent pump station for the existing West St. Tammany Wastewater Treatment Plant, including, but not limited to, wet well, pumps, electrical panels, pump building, open channel with bar screen, and a generator sized to run not only the pump station, but also the treatment plant in the event of power outage.

II. Location of Work:

LA-1085, just west of LA-1077. Across LA-1085 from Diversified Blvd. located in Covington, LA.

III. Documents: Bid Documents dated June, 2024, and entitled:

West St. Tammany Regional Sewer Treatment Facility

Bid No. 24-31-2

IV. OTHER REQUIREMENTS (as applicable)

The Contractor shall perform all his work in a way that minimizes interferences with the Department of Utility's (DU) operation of the facility and the public. All schedules and methods or work are subject to approval by the Engineer.

It will be assumed that all prospective bidders have inspected the site(s) and have anticipated themselves with the local conditions.

Because the location of the job site is on the grounds of the West St. Tammany Wastewater Treatment Plant, it is imperative that the Contractor schedule and conduct his work in such a manner so as not to interfere in any way with the operation of the facility. Trucking through the facility, delivery and storing materials and equipment, and parking shall be done with the approval of the Engineer. The Contactor's personnel will be allowed to enter the facility and park private vehicles on the site; however, he will be allowed to bring equipment and company vehicles only into the facility as necessary in the execution of this Contract but may be required to remove them if their presence interferes with the operations of the Department of Utilities, all at the discretion of the Engineer. The locations of all utilities shown on the plans are approximate. Contractor shall field verify all utilities and their tie-in prior to any work commencing.

Contractor must comply and assures compliance with Section 12 Federal Clauses.

When not otherwise specified herein, all work and materials shall conform to the requirements of the Louisiana Department of Transportation and Development hereafter called LDOTD (2016 Edition of Louisiana Standard Specifications for Roads and Bridges).

This project is federally grant funded and therefore requires the Contractor to have a Unique Entity Identification number (UEI). The Contractor should submit with their response their UEI number. If the Contractor does not have a UEI already, then they must register at the below link before an award can be made.

https://sam.gov/content/entity-registration

Table 3.1

Liquidated Damages	
Original Contract Amount	**Daily Charge**
Dollars	Dollars
0 - 250,000	500
250,000 – 1 Million	1,000
> 1 Million – 5 Million	1,500
> 5 Million – 10 Million	2,000
> 10 Million	3,000

- Parish reserves the right to increase the Daily charge rate due to additional provisions required in order to complete the project as described in the specifications

LOUISIANA UNIFORM PUBLIC WORK BID FORM

TO: St. Tammany Parish Government
21454 Koop Dr., Suite 2F
Mandeville, La 70471

(Owner to provide name and address of owner)

BID FOR:
West St. Tammany Regional Sewer Treatment Facility
Bid No.: 24-31-2

(*Owner to provide name of project and other identifying information.)*

The undersigned bidder hereby declares and represents that she/he; a) has carefully examined and understands the Bidding Documents, b) has not received, relied on, or based his bid on any verbal instructions contrary to the Bidding Documents or any addenda, c) has personally inspected and is familiar with the project site, and hereby proposes to provide all labor, materials, tools, appliances and facilities as required to perform, in a workmanlike manner, all work and services for the construction and completion of the referenced project, all in strict accordance with the Bidding Documents prepared by:
Kyle Associates, L.L.C. and dated: June 2024
(Owner to provide name of entity preparing bidding documents.)

Bidders must acknowledge all addenda. The Bidder acknowledges receipt of the following **ADDENDA:** (Enter the number the Designer has assigned to each of the addenda that the Bidder is acknowledging) _____ .

TOTAL BASE BID: For all work required by the Bidding Documents (including any and all unit prices designated "Base Bid" * but not alternates) the sum of:

_____Dollars ($ _____)

ALTERNATES: For any and all work required by the Bidding Documents for Alternates including any and all unit prices designated as alternates in the unit price description.

Alternate No. 1 *(Owner to provide description of alternate and state whether add or deduct)* for the lump sum of:
N/A Dollars ($ _____)

Alternate No. 2 *(Owner to provide description of alternate and state whether add or deduct)* for the lump sum of:
N/A Dollars ($ _____)

Alternate No. 3 *(Owner to provide description of alternate and state whether add or deduct)* for the lump sum of:
N/A Dollars ($_____)

NAME OF BIDDER: _____

ADDRESS OF BIDDER: _____

_____

LOUISIANA CONTRACTOR'S LICENSE NUMBER: _____

NAME OF AUTHORIZED SIGNATORY OF BIDDER: _____

TITLE OF AUTHORIZED SIGNATORY OF BIDDER: _____

SIGNATURE OF AUTHORIZED SIGNATORY OF BIDDER **: _____

DATE: _____

THE FOLLOWING ITEMS ARE TO BE INCLUDED WITH THE SUBMISSION OF THIS LOUISIANA UNIFORM PUBLIC WORK BID FORM:

* The Unit Price Form shall be used if the contract includes unit prices. Otherwise it is not required and need not be included with the form. The number of unit prices that may be included is not limited and additional sheets may be included if needed.

**** A CORPORATE RESOLUTION OR WRITTEN EVIDENCE** of the authority of the person signing the bid for the public work as prescribed by LA R.S. 38:2212(B)(5).

BID SECURITY in the form of a bid bond, certified check or cashier's check as prescribed by LA R.S. 38:2218(A) attached to and made a part of this bid.

AFFIDAVIT PURSUANT TO LSA-R.S. 38:2224 and 38:2227 FOR BIDDERS FOR PUBLIC WORKS CONTRACTS

STATE OF _____

PARISH/COUNTY OF _____

BEFORE ME, the undersigned authority, in and for the above stated State and Parish (or County), personally came and appeared:

_____

Print Name

who, after first being duly sworn, did depose and state:

1. That affiant is appearing on behalf of _____, who is seeking a public contract with St. Tammany Parish Government.

2. That affiant employed no person, corporation, firm, association, or other organization, either directly or indirectly, to secure the public contract under which he received payment, other than persons regularly employed by the affiant whose services in connection with the construction, alteration or demolition of the public building or project or in securing the public contract were in the regular course of their duties for affiant; and

3. That no part of the contract price received by affiant was paid or will be paid to any person, corporation, firm, association, or other organization for soliciting the contract, other than the payment of their normal compensation to persons regularly employed by the affiant whose services in connection with the construction, alteration or demolition of the public building or project were in the regular course of their duties for affiant.

4. If affiant is a sole proprietor, that after July 2, 2010, he/she has not been convicted of, or has not entered a plea of guilty or nolo contendere to any of the crimes or equivalent federal crimes listed in LSA-R.S. 38:2227(B).

5. If affiant is executing this affidavit on behalf of a juridical entity such as a partnership, corporation, or LLC, etc., that no individual partner, incorporator, director, manager, officer, organizer, or member, who has a minimum of a ten percent ownership in the bidding entity, has been convicted of, or has entered a plea of guilty or *nolo contendere* to any

of the crimes or equivalent federal crimes listed in LSA-R.S. 38:2227(B).

6. If affiant is a sole proprietor, that neither affiant, nor his/her immediate family is a public servant of St. Tammany Parish Government or the Contract is not under the supervision or jurisdiction of the public servant's agency.

7. If affiant is executing this affidavit on behalf of a juridical entity such as a partnership, corporation, or LLC, etc., that no public servant of St. Tammany Parish Government, or his/her immediate family, either individually or collectively, has more than a 25% ownership interest in the entity seeking the Contract with St. Tammany Parish Government if the Contract will be under the supervision or jurisdiction of the public servant's agency.

_____

Printed Name: _____

Title: _____

Entity name: _____

THUS SWORN TO AND SUBSCRIBED BEFORE ME,

THIS_____, DAY OF _____, 202__.

_____

Notary Public

Print Name: _____

Notary I.D./Bar No.: _____

My commission expires: _____

AFFIDAVIT PURSUANT TO LSA-R.S. 38:2212.10 CONFIRMING REGISTRATION AND PARTICIPATION IN A STATUS VERIFICATION SYSTEM

STATE OF _____

PARISH/COUNTY OF _____

BEFORE ME, the undersigned authority, in and for the above stated State and Parish (or County), personally came and appeared:

_____

Print Name

who, after first being duly sworn, did depose and state:

1. That affiant is appearing on behalf of _____, a private employer seeking a bid or a contract with St. Tammany Parish Government for the physical performance of services within the State of Louisiana.

2. That affiant is registered and participates in a status verification system to verify that all employees in the state of Louisiana are legal citizens of the United States or are legal aliens; and

3. That affiant shall continue, during the term of the contract, to utilize a status verification system to verify the legal status of all new employees in the state of Louisiana.

4. That affiant shall require all subcontractors to submit to the affiant a sworn affidavit verifying compliance with this law.

_____

Printed Name: _____

Title: _____

Name of Entity: _____

THUS SWORN TO AND SUBSCRIBED BEFORE ME,
THIS_____, DAY OF _____, 202__.

_____

Notary Public

Print Name: _____

Notary I.D./Bar No.: _____

My commission expires: _____

INSURANCE REQUIREMENTS*

Construction Project: West St. Tammany Regional Sewer Treatment Facility

Project/Quote/Bid#: 24-31-2

IMPORTANT – PLEASE READ

Prior to submitting your quote or bid, it is recommended that you review these insurance requirements with your insurance broker/agent.

These requirements modify portions of the insurance language found in the General Conditions and/or* Supplementary *General Conditions; however, there is no intention to remove all sections pertaining to insurance requirements and limits set forth in the General Conditions and/or Supplementary General Conditions, only to amend and specify those items particular for this Project.

A. The Provider shall secure and maintain at its expense such insurance that will protect it and St. Tammany Parish Government (the "Parish") from claims for bodily injury, death or property damage as well as from claims under the Workers' Compensation Acts that may arise from the performance of services under this agreement. All certificates of insurance shall be furnished to the Parish and provide thirty (30) days prior notice of cancellation to the Parish, in writing, on all of the required coverage.

B. All policies shall provide for and certificates of insurance shall indicate the following:

1. Waiver of Subrogation: The Provider's insurers will have no right of recovery or subrogation against the Parish of St. Tammany, it being the intention of the parties that all insurance policy(ies) so affected shall protect both parties and be the primary coverage for any and all losses covered by the below described insurance.

2. Additional Insured: St. Tammany Parish Government shall be named as Additional Insured with respect to general liability, automobile liability and excess liability coverages, as well as marine liability and pollution/environmental liability, when those coverages are required or necessary.

3. Payment of Premiums: The insurance companies issuing the policy or policies will have no recourse against St. Tammany Parish Government for payment of any premiums or for assessments under any form of policy.

4. Project Reference: The project(s) and location(s) shall be referenced in the Comment or Description of Operations section of the Certificate of Insurance (Project ##-###, or Bid # if applicable, Type of Work, Location).

C. Coverage must be issued by insurance companies authorized to do business in the State of Louisiana. Companies must have an A.M. Best rating of no less than A-, Category VII. St. Tammany Parish Risk Management Department may waive this requirement only for Workers Compensation coverage at their discretion.

Provider shall secure and present proof of insurance on forms acceptable to St. Tammany Parish Government, Office of Risk Management no later than the time of submission of the Contract to the Parish. However, should any work performed under this Contract by or on behalf of Provider include exposures that are not covered by those insurance coverages, Provider is not relieved of its obligation to maintain appropriate levels and types of insurance necessary to protect itself, its agents and employees, its subcontractors, St. Tammany Parish Government (Owner), and all other interested third parties, from any and all claims for damage or injury in connection with the services performed or provided throughout the duration of this Project, as well as for any subsequent periods required under this Contract.

The insurance coverages checked (✓) below are those required for this Contract.

☑ 1. **Commercial General Liability*** insurance – **Occurrence Form** - with a Combined Single Limit for bodily injury and property damage of at least $1,000,000 per Occurrence / $2,000,000 General Aggregate and $2,000,000 Products-Completed Operations. Contracts over $1,000,000 may require higher limits. The insurance shall provide for and the certificate(s) of insurance shall indicate the following coverages:

a) Premises - operations;
b) Broad form contractual liability;
c) Products and completed operations;
d) Personal/Advertising Injury;
e) Broad form property damage (for Projects involving work on Parish property);
f) Explosion, Collapse and Damage to underground property.
g) Additional Insured forms CG 2010 and CG 2037 in most current edition are required.

☑ 2. **Business Automobile Liability*** insurance with a Combined Single Limit of $1,000,000 per Occurrence for bodily injury and property damage, and shall include coverage for the following:

a) Any auto;
or
b) Owned autos; **and**
c) Hired autos; **and**
d) Non-owned autos.

☑ 3. **Workers' Compensation/Employers Liability insurance*** - Workers' Compensation coverage as required by State law. Employers' liability limits shall be a minimum of $1,000,000 each accident, $1,000,000 each disease, $1,000,000 disease policy aggregate. When water activities are expected to be performed in connection with this project, coverage under the USL&H Act, Jones Act and/or Maritime Employers Liability (MEL) must be included. **Coverage for owners, officers and/or partners in any way engaged in the Project shall be included in the policy.** The names of any excluded individual must be shown in the Description of Operations/Comments section of the Certificate**.**

☑ 4. **Pollution Liability and Environmental Liability*** insurance in the minimum amount of $1,000,000 per occurrence / $2,000,000 aggregate including full contractual liability and third party claims for bodily injury and/or property damage, for all such hazardous waste, pollutants and/or environmental exposures that may be affected by this project stemming from pollution/environmental incidents as a result of Contractor's operations.

If coverage is provided on a claims-made basis, the following conditions apply:

1) the retroactive date must be prior to or coinciding with the effective date of the Contract, or prior to the commencement of any services provided by the Contractor on behalf of the Parish, whichever is earlier; AND
2) continuous coverage must be provided to the Parish with the same retro date for 24 months following acceptance or termination of the Project by the Parish either by
    a) continued renewal certificates **OR**
    b) a 24 month Extended Reporting Period

*The Certificate must indicate whether the policy is written on an occurrence or claims-made basis and, if claims-made, the applicable retro date must be stated.

☑ 5. **Contractor's Professional Liability/Errors and Omissions*** insurance in the sum of at least $1,000,000 per claim / $2,000,000 aggregate is required when work performed by Contractor or on behalf of Contractor includes professional or technical services including, but not limited to, construction administration and/or management, engineering services such as design, surveying, and/or inspection, technical services such as testing and laboratory analysis, and/or environmental assessments. An occurrence basis policy is preferred.

If coverage is provided on a claims-made basis, the following conditions apply:

1) the retroactive date must be prior to or coinciding with the effective date of the Contract, or prior to the commencement of any services provided by the Contractor on behalf of the Parish, whichever is earlier; AND
2) continuous coverage must be provided to the Parish with the same retro date for 24 months following acceptance or termination of the Project by the Parish either by
    a) continued renewal certificates **OR**
    b) a 24 month Extended Reporting Period

*The Certificate must indicate whether the policy is written on an occurrence or claims-made basis and, if claims-made, the applicable retro date must be stated.

☐ 6. **Marine Liability/Protection and Indemnity*** insurance is required for any and all vessel and/or marine operations in the minimum limits of $1,000,000 per occurrence / $2,000,000 per project general aggregate. The coverage shall include, but is not limited to, the basic coverages found in the Commercial General Liability insurance and coverage for third party liability

***Excess/Umbrella Liability** insurance may be provided to meet the limit requirements for any Liability coverage. For example: if the General Liability requirement is $3,000,000 per occurrence, but the policy is only $1,000,000 per occurrence, then the excess policy should be at least $2,000,000 per occurrence thereby providing a combined per occurrence limit of $3,000,000.)

☑ 7. **Owners Protective Liability (OPL)** shall be furnished by the Contractor and shall provide coverage in the minimum amount of $3,000,000 CSL each occurrence / $3,000,000 aggregate. **St. Tammany Parish Government, ATTN: Risk Management Department, P. O. Box 628, Covington, LA 70434 shall be the first named insured on the policy**.

☑ 8. **Builder's Risk Insurance** written as an "all-risk" policy providing coverage in an amount at or greater than one hundred percent (100%) of the completed value of the contracted project. Any contract modifications increasing the contract cost will require an increase in the limit of the Builder's Risk policy. Deductibles should not exceed $5,000 and Contractor shall be responsible for all policy deductibles. This insurance shall cover materials at the site, stored off the site, and in transit. The Builder's Risk Insurance shall include the interests of the Owner, Contractor and Subcontractors and shall terminate only when the Project is accepted in writing. **St. Tammany Parish Government, ATTN: Risk Management Department, P. O. Box 628, Covington, LA 70434 shall be named as a Loss Payee on the policy**.

☐ 9. **Installation Floater Insurance**, on an "all-risk" form, shall be furnished by Contractor and carried for the full value of the materials, machinery, equipment and labor for each location. The Contractor shall be responsible for all policy deductibles. The Installation Floater Insurance shall provide coverage for property owned by others and include the interests of the Owner, Contractor and Subcontractors and shall terminate only when the Project is accepted in writing. **St. Tammany Parish Government, ATTN: Risk Management Department, P. O. Box 628, Covington, LA 70434 shall be named as a Loss Payee on the policy**.

D. All policies of insurance shall meet the requirements of the Parish prior to the commencing of any work. The Parish has the right, but not the duty, to approve all insurance coverages prior to commencement of work. If any of the required policies are or become unsatisfactory to the Parish as to form or substance; or if a company issuing any policy is or becomes unsatisfactory to the Parish, the Provider shall promptly obtain a new policy, timely submit same to the Parish for approval, and submit a certificate thereof as provided above. The Parish agrees not to unreasonably withhold approval of any insurance carrier selected by Provider. In the event that Parish cannot agree or otherwise authorize a carrier, Provider shall have the option of selecting and submitting a new insurance carrier within 30 days of said notice by the Parish. In the event that the second submission is insufficient or is not approved, then the Parish shall have the unilateral opportunity to thereafter select a responsive and responsible insurance carrier all at the cost of Provider and thereafter deduct from Provider's fee the cost of such insurance.

E Upon failure of Provider to furnish, deliver and/or maintain such insurance as above provided, this contract, at the election of the Parish, may be declared suspended, discontinued or terminated. Failure of the Provider to maintain insurance shall not relieve the Provider from any liability under the contract, nor shall the insurance requirements be construed to conflict with the obligation of the Provider concerning indemnification.

F. Provider shall maintain a current copy of all annual insurance policies and agrees to provide a certificate of insurance to the Parish on an annual basis or as may be reasonably requested for the term of the contract or any required Extended Reporting Period. Provider further shall ensure that all insurance policies are maintained in full force and effect throughout the duration of the Project and shall provide the Parish with annual renewal certificates of insurance evidencing continued coverage, without any prompting by the Parish.

G. It shall be the responsibility of Provider to require that these insurance requirements are met by all contractors and sub-contractors performing work for and on behalf of Provider. Provider shall further ensure the Parish is named as an additional insured on all insurance policies provided by said contractor and/or sub-contractor throughout the duration of the project.

H. Certificates of Insurance shall be issued as follows:

St. Tammany Parish Government
Attn: Risk Management
P O Box 628
Covington, LA 70434

To avoid contract processing delays, be certain the project name/number is included on all correspondence including Certificates of Insurance.

***NOTICE*: St. Tammany Parish Government reserves the rights to remove, replace, make additions to and/or modify any and all of the insurance requirements at any time.**

Any inquiry regarding these insurance requirements should be addressed to:

St. Tammany Parish Government
Office of Risk Management
P O Box 628
Covington, LA 70434
Telephone: 985-898-5226
Email: riskman@stpgov.org

Section 07

Project Signs

1. General

a. Work to include providing and installing project sign(s) at the beginning of the project. Some projects may require multiple signs. Should more than one sign be required, it will be reflected in the bidding documents.

2. Materials

a. The printed project sign(s) shall be 3/8" primed Medium Density Overlay (MDO) **OR** 3-millimeter corrugated plastic secured to exterior plywood (4' x 4').

b. Contractor shall not use previously provided templates and/or fonts.

3. Execution

a. The sign(s) shall be printed on a project-by-project basis in black and white, using the template and font provided to the Contractor by the St. Tammany Parish Government Project Manager.

b. All signage proofed and approved by State Tammany Parish Government before project sign(s) are to be produced by the Contractor.

c. Exact placement of the project sign(s) must be coordinated with, and approved by, the St. Tammany Parish Government Project Manager prior to sign installation.

d. The sign(s) is to be installed such that the bottom of the sign is a minimum of 5' above the existing ground elevation.

e. Sign(s) is to be maintained throughout the period of construction. If sign(s) is damaged or destroyed, repair and/or replacement of sign(s) will be at Contractor's expense.

f. Contractor is responsible for the removal of all project signs upon issuance of final acceptance by the St. Tammany Parish Government Project Manager at no direct pay.

g. Cost to be included in "Temporary Signs and Barricades" bid item

Blank Template of Parish Project Sign:

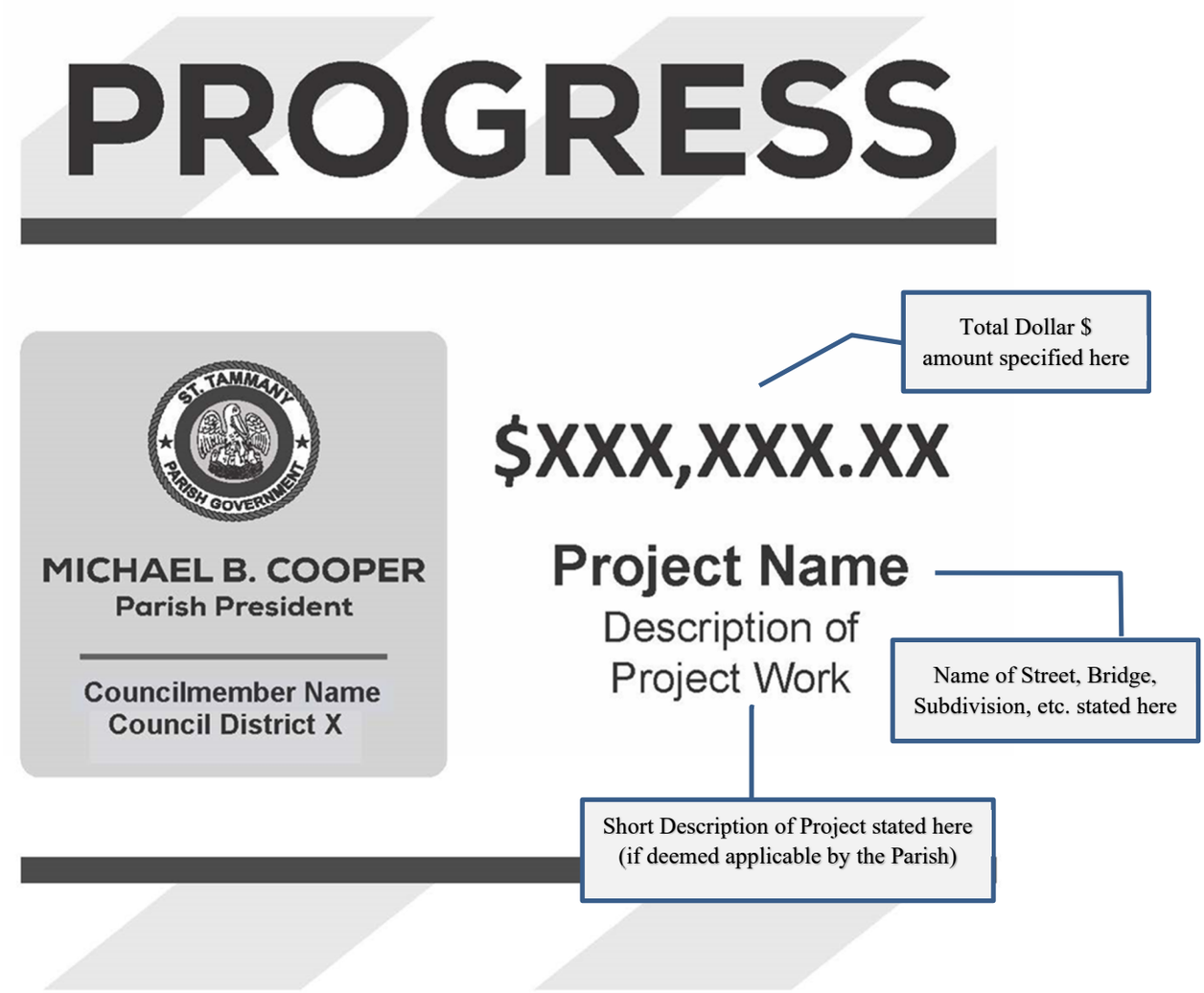

Example of a Completed Parish Project Sign:

PROGRESS

MICHAEL B. COOPER
Parish President

RYKERT O. TOLEDANO, JR
Council District 5

$514,444.40

Dove Park
Subdivision Drainage
Drainage Improvements along
Swallow St., Sparrow St.,
Partridge St. and Egret St.

Section 08

General Conditions for St. Tammany Parish Government

This index is for illustrative purposes only and is not intended to be complete nor exhaustive.

All bidders/contractors are presumed to have read and understood the entire document. Some information contained in these conditions may not be applicable to all projects.

GENERAL CONDITIONS INDEX

A.A.S.H.T.O	01.01
A.C.I.	01.02
ADDENDA	01.03, 01.05, 01.12, 02.13, 02.13, 06.02, 06.03
ADVERTISEMENT	01.04, 01.12, 02.21, 02.22, 02.23
AGREEMENT	01.05, 01.11, 01.12, 01.14, 01.15, 01.19, 03.02, 03.03, 03.04, 06.01, 06.02, 10.01, 11.03, 12.01, 14.02, 29.06, 32.01, 32.02, 33.06, 33.07
APPLICATION FOR PAYMENT	01.06, 29.07
A.S.T.M.	01.07
AWARD	03.00, 03.01, 03.04, 03.05
BID	01.08, 01.12, 01.26, 02.02, 02.04, 02.08, 02.09, 02.10, 02.13, 02.14, 02.17, 02.19, 02.21, 03.01, 03.04, 04.02, 14.03, 22.01, 23.01, 28.08
BIDDER	01.04, 01.08, 01.09, 01.26, 01.28, 02.02, 02.04, 02.06, 02.08, 02.09, 02.10, 02.12, 03.13, 02.14, 02.16, 02.17, 02.19, 02.20, 02.21, 02.24, 03.01, 03.04, 03.05, 23.01
BONDS	01.10, 01.12 02.02, 02.09, 03.00, 03.03, 03.04, 03.05, 03.07, 03.08, 03.10, 03.12, 03.13, 27.06
CHANGE ORDER	01.11, 01.19, 04.01, 09.04, 11.07, 16.02, 16.06, 16.07, 21.06, 21.08, 21.10, 21.11, 29.06, 33.07
CLAIMS	02.15, 04.05, 09.05, 14.01, 16.04, 16.05, 21.16, 24.01
CLOSING ROADS	16.06, 16.07, 16.15
COMMENCE WORK	04.04, 07.04, 09.02, 11.02, 14.02, 16.13, 24.02
COMPLETION OF WORK OR PROJECT	01.14, 02.15, 08.03, 09.01, 09.04, 11.00, 11.03, 12.01, 13.01, 13.11, 20.01, 25.01, 28.02, 29.04
CONDITIONS AT JOB SITE	16.17
CONTRACT DOCUMENTS	01.03, 01.03, 01.10, 01.12, 01.13, 01.16, 01.17, 01.18, 01.19, 01.29, 01.22, 01,25, 01.30, 01.33, 02.02, 02.05, 02.13, 02.17, 02.18, 02.23, 03.01, 03.02, 04.01, 04.02, 04.03, 04.04, 04.05, 06.00, 06.01, 06.02, 06.03, 07.02, 07.03, 07.05, 08.01, 10.06, 11.03, 13.01, 13.02, 21.01, 21.09, 21.10, 21.11, 28.01, 28.04, 33.01
CONTRACT PRICE	01.11, 01.13, 03.05, 04.01, 12.01, 14.02, 21.06, 21.10, 21.11, 27.05, 28.01, 28.02, 28.03, 28.08

CONTRACT TIME	01.11, 01.14, 01.22, 10.06, 11.01, 21.06, 29.04
CONTRACTOR - (Defined)	01.15
DAMAGE	02.15, 03.05, 03.12, 04.05, 09.05, 11.09, 13.11, 14.01, 14.02, 16.01, 16.02, 16.03, 16.04, 16.05, 19.01, 19.03, 20.01, 20.08, 23.03, 24.01, 24.07, 24.12, 26.03, 28.05, 28.01, 28.10, 33.07
DEFECTIVE WORK	01.16, 10.03, 21.00, 21.01, 21.07, 21.08, 21.09, 21.10, 28.03
DELAYS	07.02, 11.05, 11.09, 12.01, 16.07, 18.02, 19.01, 28.04
DRAWINGS	01.12, 01.17, 02.13, 02.17, 02.23, 06.01, 06.02, 06.03, 13.15, 22.02, 01.27, 01.33, 03.12, 04.01, 06.02, 09.01, 10.01, 10.02, 11.07, 13.00, 13.01, 13.03, 13.05, 13.11, 13.12, 13.15, 14.02, 14.07, 14.08, 14.09, 16.09, 16.13, 21.01, 21.06, 21.07, 21,14, 24.07, 27.05, 27.07, 28.01, 28.05, 28.10, 29.03, 13.00, 13.11
ENGINEER STATUS (NOT APPLICABLE)	15.00
EXTRA WORK	03.09, 14.00, 14.03, 14.04, 14.05, 14.08, 14.09, 14.10, 14.11, 14.12, 16.01, 22.02
FAILURE OF CONTRACTOR	03.10, 04.05, 06.02, 09.05, 10.01, 10.03, 13.10, 16.03, 20.01, 24.09, 27.02, 28.10
FAILURE OF OWNER	02.13
FAILURE OF SUCCESSFUL BIDDER	02.13, 02.17, 03.04
FIELD ORDER	01.18
FORCE ACCOUNT	14.04, 14.05, 14.11, 14.12
FUNDING	33.09
INDEMNIFY / HOLD HARMLESS	02.15, 03.05, 04.05, 13.11, 16.04, 16.05, 20.02, 24.06, 24.09
INDEMNIFYING INFRINGEMENT CLAUSE	02.15
INJURIES	16.00, 16.01, 16.02, 19.01, 19.03, 20.01, 24.02, 24.07
INSPECTION FEES	13.12
INSPECTIONS, GENERALLY	01.16, 13.05, 16.13, 21.00, 21.03, 21.04, 21.05, 21.06, 21.14, 21.15, 28.04, 29.02, 29.03
INSURANCE	01.05, 14.05, 16.13, 24.00 - 12, 27.07, 28.05
INTENTION OF CONTRACT DOCUMENTS	06.00, 06.01
INTENTION OF GENERAL CONDITIONS	31.00

LABOR	01.33, 03.12, 09.01, 13.00, 13.01, 13.02, 13.08, 13.10, 13.11, 13.12, 14.05, 16.06, 16.07, 21.06, 21.07, 21.15, 27.01, 28.10, 29.03
LAWS	01.10, 01.20, 02.06, 02.13, 02.14, 02.16, 02.20, 03.01, 03.10, 13.12, 16.06, 16.07, 20.02, 21.02, 21.09, 27.01, 29.06, 33.00, 33.01, 33.08
LIQUIDATED DAMAGES	11.03, 12.00, 12.01, 29.04
MATERIALS	01.33, 03.12, 04.01, 06.02, 07.01, 09.01, 10.01, 10.02, 13.00, 13.01, 13.03, 13.04, 13.05, 13.12, 13.13, 13.15, 14.01, 14.11, 20.01, 12.01, 21.07, 21.14, 21.15, 23.03, 27.01, 27.05, 27.07, 28.01, 28.05, 28.07, 28.08, 28.10
MODIFICATIONS	01.12, 01.19, 02.12, 02.13, 06.01, 06.02, 24.07, 32.02
NOTICE OF AWARD	01.20, 03.01, 03.04, 04.01
NOTICE OF DEFAULT	12.01, 33.08
NOTICE TO BIDDER	2.21
NOTICE TO CONTRACTOR	01.12, 01.21, 21.11, 30.01
NOTICE TO OWNER	13.07, 24.06, 27.07
NOTICE TO PROCEED	01.22, 09.02, 11.01, 11.03
OBSTRUCTIONS	16.09, 16.11, 16.15, 23.00, 23.01, 23.02
OCCUPANCY	25.00
ORAL INTERPRETATIONS	02.13
OWNER - (Defined)	01.23
PAYMENT	01.30,.03,10, 03.12, 03.13, 04.12, 09.03, 11.04, 11.09, 14.04, 14.12, 16.02, 16.16, 19.02, 21.07, 21.08, 21.09, 21.10, 21.11, 21.16, 24.02, 24.03, 24.12, 27.01, 27.07, 28.00, 28.01, 28.02, 28.03, 28.04, 28.05, 28.06, 28.08, 28.09, 28.10, 29.00, 29.03, 29.05, 29.07
PERMITS	13.00, 13.12, 16.13, 28.08
PRICE	02.05, 14.02, 14.03, 14.04, 14.05, 22.01
PROGRESS PAYMENT	01.06, 28.06
PROGRESS SCHEDULE	09.03, 09.05, 21.11
PROGRESS OF WORK	09.00, 11.09, 13.07, 16.01, 16.12, 21.11, 21.12, 22.02, 27.02
PROJECT	01.24, 01.29, 01.30, 02.04, 03.07, 06.01, 07.03, 10.02, 11.04, 11.06, 13.08, 13.13, 14.08, 14.11, 16.15, 24.07, 24.11, 28.07, 29.03, 29.07

PROJECT REPRESENTATIVE	01.23, 21.16
PROPERTY	16.00, 16.01, 16.02, 16.03, 16.12, 16,13, 16.17, 18.01, 19.00, 19.01, 19.02, 19.03, 23.03, 24.0124.07, 26.03, 28.10, 29,08, 33.05
PROPOSAL	01.26, 02.00, 02.01, 02.03, 02.05,.02.06, 02.07, 02.08, 02.09, 02.10, 02.11, 02.12, 02.14, 02.18, 02.21, 02.22, 11.03, 12.01, 14.01, 14.02, 14.03, 19.02, 23.02, 28.08
PROTESTS	33.10
PUNCH LIST	29.03, 29.04
QUANTITIES OF ESTIMATES	14.00, 14.01, 14.02, 14.04
RAILROADS	16.13, 19.01
RECORD DRAWINGS	08.00, 18.01, 18.02, 18.03
RECORDATION OF DOCUMENTS	03.13, 28.03, 29.05, 29.06
REJECTION OF BIDS	02.03, 02.07, 02.08, 02.10, 02.14, 03.01
RENTAL OF EQUIPMENT	14.07, 14.09
RIGHTS OF WAY	18.00
SAFETY	16.01, 16.07, 16.14, 16.17
SANITARY PROVISIONS	13.01, 17.00
SCHEDULE OF WORK	09.03, 09.04, 9.05, 11.06, 13.09
SEVERABILITY	32.01, 32.02
SHOP DRAWINGS	01.27, 06.03, 07.00, 07.01, 07.02, 07.03, 07.04, 07.05
SITE	02.17, 7.04, 13.05, 13.07, 13.11, 14.06, 16.09, 21.08, 21.09, 21.12, 22.02, 23.01, 24.07
SOLICITATION OF EMPLOYMENT	13.14
SPECIFICATIONS	01.01, 01.02, 01.05, 01.07, 01.12, 01.28, 02.13, 02.17, 02.23, 03.06, 03.09, 03.10, 03.13, 06.01, 06.02, 06.03, 07.04, 07.05, 11.03, 13.05, 13.15, 20.01, 21.12, 22.02, 28.01, 28.04, 32.01
SUBCONTRACTOR	01.27, 01.29, 04.01, 04.02, 04.03, 04.04, 04.05, 16.02, 16.04, 16.05, 20.01, 20.02, 21.07, 24.01, 24.07, 27.01, 28.07
SUBCONTRACTS	04.00, 13.09
SUBSURFACE CONDITIONS	02.17, 22.00, 22.01, 22.02
SUBSTANTIAL COMPLETION	01.30, 11.04, 21.09, 28.04, 29.01, 29.02, 29.03, 29.04, 29.06
SUPERINTENDENT	01.21, 01.31, 13.07, 14.05

SUPERVISION	13.01, 13.06
SURETY	01.05, 01.10, 02.09, 03.05, 03.06, 03.07, 03.08, 03.09, 03.11, 03.12, 04.05, 05.01, 14.03, 27.03, 27.05
SURVEY	13.02, 26.00, 26.01
TAXES	02.05, 13.00, 13.12, 13.13, 14.05, 28.07, 28.08, 28.10
TERMINATION OF CONTRACT	13.10, 24.09, 27.00, 27.01, 27.02, 27.03, 27.04, 27.05, 27.06, 27.07
TESTS, GENERALLY	21.00, 21.02, 21.03, 21.04, 21.05, 21.06
TIME	01.32
TRAFFIC	16.06, 16.07, 16.10, 16.15, 16.16
TRAFFIC HAZARDS	16.16
TREES AND SHRUBS	19.02
VERBAL INSTRUCTIONS	21.16
WAIVERS	24.06, 29.03, 33.08
WARNING DEVICES	16.13, 16.14, 16.15
WARRANTY	21.01, 21.08, 21.09, 33.04, 33.06
WORK	01.31, 20.01
WORK BY OTHERS	10.03, 10.04, 10.05
WORK BY OWNER	10.02, 10.04, 10.05
WORK FOR OTHER, RESTRICTIONS	16.12
WORK ORDER	28.01

01.00 DEFINITIONS OF TERMS

Whenever used in these General Conditions or in other Contract Documents, the following terms shall have the meanings indicated, and these shall be applicable to both the singular and plural thereof.

01.01 A.A.S.H.T.O American Association of State Highway and Transportation Officials. When A.A.S.H.T.O. is referred to in these Specifications it takes the meaning of the specification for materials and methods of testing specified by this association and the specification stated is considered to be a part of the Specifications as if written herein in full.

01.02 A.C.I American Concrete Institute. When A.C.I. is referred to in these Specifications it takes the meaning of the specification for materials and methods of testing specified by this institute and the specification stated is considered to be a part of the Specifications as if written herein in full.

01.03 Addenda Written or graphic instruments issued prior to the opening of bids which clarify, correct, modify or change the bidding or Contract Documents.

01.04 Advertisement The written instrument issued by the Owner at the request of the Owner used to notify the prospective bidder of the nature of the Work. It becomes part of the Contract Documents.

01.05 Agreement The written agreement or contract between the Owner and the Contractor covering the Work to be performed and the price that the Owner will pay. Other documents, including the Proposal, Addenda, Specifications, plans, surety, insurance, etc., are made a part thereof.

01.06 Application for Payment The form furnished by the Owner which is to be used by the Contractor in requesting incremental (progress) payments and which is to include information required by Section 28.01 and an affidavit of the Contractor. The affidavit shall stipulate that progress payments theretofore received from the Owner on account of the Work have been applied by Contractor to discharge in full of all Contractor's obligations reflected in prior applications for payment.

01.07 A.S.T.M. American Society of Testing Materials. When A.S.T.M. is referred to in these Specifications it takes the meaning of the specification for materials and methods of testing specified by this society and the specification stated is considered to be a part of the Specifications as if written herein in full.

01.08 Bid The offer or Proposal of the Bidder submitted on the prescribed form setting forth all the prices for the Work to be performed.

01.09 Bidder Any person, partnership, firm or corporation submitting a Bid for the Work.

01.10 Bonds Bid, performance and payment bonds and other instruments of security, furnished by the Contractor and its surety in accordance with the Contract Documents and Louisiana law.

01.11 Change Order A written order to the Contractor signed by the Owner authorizing an addition, deletion or revision in the Work, or an adjustment in the Contract Price or the Contract Time after execution of the Agreement.

01.12 Contract Documents The Agreement, Addenda, Contractor's Bid and any documentation accompanying or post-bid documentation when attached as an exhibit, the Bonds, these General Conditions, the Advertisement for Bid, Notice to Contractor, all supplementary conditions, the Specifications, the Drawings, together with all Modifications issued after the execution of the Agreement.

01.13 Contract Price The total monies payable to the Contractor under the Contract Documents.

01.14 Contract Time The number of consecutive calendar days stated in the Agreement for the completion of the Work.

01.15 Contractor The person, firm, corporation or provider with whom the Owner has executed the Agreement.

01.16 Defective Work When work which is unsatisfactory, faulty or deficient for any reason whatsoever, or does not conform to the Contract Documents, or does not meet the requirements of any inspection, test or approval referred to in the Contract Documents, or has been damaged prior to the Owner's recommendation or acceptance.

01.17 Drawings The Drawings and plans which show the character and scope of the Work to be performed and which have been prepared or approved by the Owner and are referred to in the Contract Documents.

01.18 Field Order A written order issued by the Owner or his agent which clarifies or interprets the Contract Documents.

01.19 Modification (a) A written amendment of the Contract Documents signed by both parties, (b) A Change Order, (c) A written clarification or interpretation issued by the Owner or his agent. Modification may only be issued after execution of the Agreement.

01.20 Notice of Award The written notice by Owner to the lowest responsible Bidder stating that upon compliance of the conditions enumerated in the Notice of Award, or enumerated in the Bid documents, the Owner will deliver the Contract Documents for signature. The time for the delivery of the Contract Documents can be extended in conformance with Louisiana Law.

01.21 Notice to Contractor Instructions, written or oral given by Owner to Contractor and deemed served if given to the Contractor's superintendent, foreman or mailed to Contractor at his last known place of business.

01.22 Notice to Proceed A written notice given by the Owner fixing the date on which the Contract Time will commence, and on which date the Contractor shall start to perform his obligation under the Contract Documents. Upon mutual consent by both parties, the Notice to Proceed may be extended.

01.23 Owner St. Tammany Parish Government, acting herein through its duly constituted and authorized representative, including but not limited to the Office of the Parish President or its designee, its Chief Administrative Officer, and/or Legal Counsel. St. Tammany Parish Government (hereinafter, the “Parish”) and Owner may be used interchangeably.

01.24 Project The entire construction to be performed as provided in the Contract Documents.

01.25 Project Representative The authorized representative of the Owner who is assigned to the Project or any parts thereof.

01.26 Proposal The Bid submitted by the Bidder to the Owner on the Proposal form setting forth the Work to be done and the price for which the Bidder agrees to perform the Work.

01.27 Shop Drawings All drawings, diagrams, illustrations, brochures, schedules and other data which are prepared by the Contractor, Subcontractor, Manufacturer, Supplier or Distributor and which illustrate the equipment, material or some portion of the Work.

01.28 Specifications The Instructions to Bidders, these General Conditions, the Special Conditions and the Technical Provisions. All of the documents listed in the "Table of Contents."

01.29 Subcontractor An individual, firm or corporation having a direct Contract with the Contractor or with any other Subcontractor for the performance of a part of the Project Work.

01.30 Substantial Completion The date as certified by the Owner or its agent when the construction of the Project or a specified part thereof is sufficiently complete in accordance with the Contract Documents so that the Project or specified part can be utilized for the

purposes for which it was intended; or if there is no such certification, the date when final payment is due in accordance with Section 28.

01.31 Superintendent Contractor's site representative. The person on the site who is in full and complete charge of the Work.

01.32 Time Unless specifically stated otherwise, all time delays shall be calculated in calendar days.

01.33 Work Any and all obligations, duties and responsibilities necessary to the successful completion of the Project assigned to or undertaken by the Contractor under the Contract Documents, usually including the furnishing of all labor, materials, equipment and other incidentals.

01.34 The terms “he/himself” may be used interchangeably with “it/itself.”

02.00 PROPOSAL

02.01 All papers bound with or attached to the Proposal Form are a necessary part thereof and must not be detached.

02.02 For submitting Bids, the only forms allowed shall be the “Louisiana Uniform Public Work Bid Form”, “Louisiana Uniform Public Works Bid Form Unit Price Form” (if necessary), the Bid Bond, and written evidence of authority of person signing the bid. Necessary copies of the Louisiana Uniform Public Work Forms will be furnished for Bidding. Bound sets of the Contract Documents are for Bidder's information and should not be used in submitting Bids.

02.03 Proposal forms must be printed in ink or typed, unless submitted electronically. Illegibility or ambiguity therein may constitute justification for rejection of the Bid.

02.04 Each Bid must be submitted in a sealed envelope, unless submitted electronically. The outside of the envelope shall show the name and address of the Bidder, the State Contractor’s License Number of the Bidder (if work requires contractor’s license), and the Project name and number for which the Bid is submitted, along with the Bid number.

02.05 The price quoted for the Work shall be stated in words and figures on the Bid Form, and in numbers only on the Unit Price Form. The price in the Proposal shall include all costs necessary for the complete performance of the Work in full conformity with the conditions of the Contract Documents, and shall include all applicable Federal, State, Parish, Municipal or other taxes. The price bid for the items listed on the Unit Price Form will include the cost of all related items not listed, but which are normally required to do the type of Work bid.

02.06 The Bid shall be signed by the Bidder. The information required on the Louisiana Uniform Public Work Bid Form must be provided. Evidence of agency, corporate, or partnership authority is required and shall be provided in conformance with LSA-R.S. 38:2212(B).

02.07 Only the Contractors licensed by the State to do the type of Work involved can submit a Proposal for the Work. The envelope containing the Proposal shall have the Contractor's license number on it. Failure to be properly licensed constitutes authority by the Owner for rejection of Bid.

02.08 Bidders shall not attach any conditions or provisions to the Proposal. Any conditions or provisions so attached may, at the sole option of the Owner, cause rejection of the Bid or Proposal.

02.09 A Bid Guarantee of five percent (5%) of the amount of the total Bid, including Alternates, must accompany the Proposal and, at the option of the Bidder, may be a cashier's check, certified check or a satisfactory Bid Bond. The Bid Guarantee must be attached to the Louisiana Uniform Public Work Bid Form. No Bid will be considered unless it is so guaranteed. Cashier's check or certified check must be made payable to the order of the Owner. Cash deposits will not be accepted. The Owner reserves the right to cash or deposit the cashier's check or certified check. Such guarantees shall be made payable to the Parish

of St. Tammany. In accordance with LSA-R.S. 38:2218(C), if a bid bond is used, it shall be written by a surety or insurance company currently on the U.S. Department of the Treasury Financial Management Service list of approved bonding companies which is published annually in the Federal Register, or by a Louisiana domiciled insurance company with at least an A- rating in the latest printing of the A.M. Best's Key Rating Guide to write individual bonds up to ten percent of policyholders' surplus as shown in the A.M. Best's Key Rating Guide, or by an insurance company in good standing licensed to write bid bonds which is either domiciled in Louisiana or owned by Louisiana residents. It is **not** required to be on any AIA form.

02.10 Bid securities of the three (3) lowest Bidders will be retained by the Owner until the Contract is executed or until final disposition is made of the Bids submitted. Bid securities of all other Bidders will be returned promptly after the canvas of Bids. Bids shall remain binding for forty-five (45) days after the date set for Bid Opening. The Parish shall act within the forty-five (45) days to award the contract to the lowest responsible bidder or reject all bids as permitted by Public Bid Law. However, the Parish and the lowest responsible bidder, by mutual written consent, may agree to extend the deadline for award by one or more extensions of thirty (30) calendar days. In the event the Owner issued the Letter of Award during this period, or any extension thereof, the Bid accepted shall continue to remain binding until the Execution of the Contract.

02.11 A Proposal may be withdrawn at any time prior to the scheduled closing time for receipt of Bids, provided the request is in writing, executed by the Bidder or its duly authorized representative and is filed with the Owner prior to that time. When such a request is received, the Proposal will be returned to the Bidder unopened.

02.12 Written communications, over the signature of the Bidder, to modify Proposals will be accepted and the Proposal corrected in accordance therewith if received by the Owner prior to the scheduled closing time for receipt of Bids. Oral, telephonic or telegraphic Modifications will not be considered.

02.13 No oral interpretation obligating the Owner will be made to any Bidder as to the meaning of the Drawings, Specifications and Contract Documents. Every request for such an interpretation shall be made in writing and addressed and forwarded to the Owner. No inquiry received within seven (7) days prior to the day fixed for opening of the Bids shall be given consideration. Every interpretation made to the Bidder shall be in the form of an addendum to the Specifications. All such Addenda shall become part of the Contract Documents. Failure of Bidder to receive any such interpretation shall not relieve any Bidder from any obligation under this Bid. All Addenda shall be issued in accordance with the Public Bid Law, LSA-R.S. 38:2212(O)(2)(a) and (b).

02.14 The Owner reserves the right to reject any or all Bids for just cause in accordance with the Public Bid Law, LSA-R.S. 38:2214(B). Incomplete, informal or unbalanced Bids may be rejected. Reasonable grounds for belief that any one Bidder is concerned directly or indirectly with more than one Bid will cause rejection of all Bids wherein such Bidder is concerned. If required, a Bidder shall furnish satisfactory evidence of its competence and ability to perform the Work stipulated in its Proposal. Incompetence will constitute cause for rejection. If the Parish determines that the bidder is not responsive or responsible for any reason whatsoever, the bid may be rejected in accordance with State law.

02.15 The Contractor shall indemnify and hold harmless the Owner from any and all suits, costs, penalties or claims for infringement by reason of use or installation of any patented design, device, material or process, or any trademark and copyright in connection with the Work agreed to be performed under this Contract, and shall indemnify and hold harmless the Owner for any costs, expenses and damages which it may be obliged to pay by reason of any such infringement at any time during the prosecution or after completion of the Work.

02.16 Bidders shall familiarize themselves with and shall comply with all applicable Federal and State Laws, municipal ordinances and the rules and regulations of all authorities having jurisdiction over construction of the Project, which may directly or indirectly affect the Work or its prosecution. These laws and/or ordinances will be deemed to be included in the Contract, as though herein written in full.

02.17 Each Bidder shall visit the site of the proposed Work and fully acquaint itself with all surface and subsurface conditions as they may exist so that it may fully understand this

Contract. Bidder shall also thoroughly examine and be familiar with drawings, Specifications and Contract Documents. The failure or omission of any Bidder to receive or examine any form instrument, Drawing or document or to visit the site and acquaint itself with existing conditions, shall in no way relieve any Bidder from any obligation with respect to its Bid and the responsibility in the premises.

02.18 The standard contract form enclosed with the Proposal documents is a prototype. It is enclosed with the Contract Documents for the guidance of the Owner and the Contractor. It has important legal consequences in all respects and consultation with an attorney is encouraged. Contractor shall be presumed to have consulted with its own independent legal counsel.

02.19 When one set of Contract plans show the Work to be performed by two or more prime Contractors, it is the responsibility of each Bidder to become knowledgeable of the Work to be performed by the other where the Work upon which this bid is submitted is shown to come into close proximity or into conflict with the Work of the other. In avoiding conflicts, pressure pipe lines must be installed to avoid conflict with gravity pipe lines and the Bidder of the smaller gravity pipe line in conflict with the larger gravity pipe line must include in his Bid the cost of a conflict box at these locations. The location of and a solution to the conflicts do not have to be specifically noted as such on the plans.

02.20 Bidder shall execute affidavit(s) attesting compliance with LSA-R.S. 38:2212.10, 38:2224, 38:2227, each as amended, and other affidavits as required by law, prior to execution of the contract.

02.21 Sealed Proposals (Bid) shall be received by St. Tammany Parish Government at the office of St. Tammany Parish Government, Department of Procurement, 21454 Koop Drive, Suite 2-F, Mandeville, LA 70471, until the time and date denoted in Notice to Bidders, at which time and place the Proposals (Bids), shall be publicly opened and read aloud to those present. In accordance with LSA-R.S. 38-2212(A)(3)(c)(i), the designer's final estimated cost of construction shall be read aloud upon opening bids. Sealed Proposals (Bids) may also be mailed by certified mail to St. Tammany Parish Government, Department of Procurement, 21454 Koop Drive, Suite 2-F, Mandeville, LA 70471, and must be received before the bid opening. Bids may also be submitted electronically. Information concerning links for electronic bidding is contained in the Notice to Bidders.

02.22 Proposals (Bids) shall be executed on Forms furnished and placed in a sealed envelope, marked plainly and prominently as indicated in the Notice to Bidders, and these General Conditions, and addressed:

St. Tammany Parish Government
Department of Procurement
21454 Koop Drive, Suite 2-F
Mandeville, LA 70471

03.00 <u>AWARD, EXECUTION OF DOCUMENTS, BONDS, ETC.</u>

03.01 The award of the Contract, if it is awarded, will be to the lowest responsible Bidder, in accordance with State Law. No award will be made until the Owner has concluded such investigations as it deems necessary to establish the responsibility, qualifications and financial ability and stability of the Bidder to do the Work in accordance with the Contract Documents to the satisfaction of the Owner within the time prescribed as established by the Department based upon the amount of work to be performed and the conditions of same. The written contract and bond shall be issued in conformance with LSA-R.S. 38:2216. The Owner reserves the right to reject the Bid of any Bidder in accordance with the Public Bid Law, LSA-R.S. 38:2214. If the Contract is awarded, the Owner shall give the successful Bidder written notice of the award within forty-five (45) calendar days after

the opening of the Bids in conformance with LSA-R.S. 38:2215(A), or any extension as authorized thereunder.

03.02 At least three counterparts of the Agreement and of such other Contract Documents as practicable shall be signed by the Owner and the Contractor. The Owner shall identify those portions of the Contract Documents not so signed and such identification shall be binding on both parties. The Owner and the Contractor shall each receive an executed counterpart of the Contract Documents.

03.03 Prior to the execution of the Agreement, the Contractor shall deliver to the Owner the required Bonds.

03.04 Failure of the successful Bidder to execute the Agreement and deliver the required Bonds within twenty (20) days of the Notice of the Award shall be just cause for the Owner to annul the award and declare the Bid and any guarantee thereof forfeited.

03.05 In order to ensure the faithful performance of each and every condition, stipulation and requirement of the Contract and to indemnify and save harmless the Owner from any and all damages, either directly or indirectly arising out of any failure to perform same, the successful Bidder to whom the Contract is awarded shall furnish a surety Bond in an amount of at least equal to one hundred percent (100%) of the Contract Price. The Contract shall not be in force or binding upon the Owner until such satisfactory Bond has been provided to and approved by the Parish. The cost of the Bond shall be paid for by the Contractor unless otherwise stipulated in the Special Provisions.

03.06 No surety Company will be accepted as a bondsman who has no permanent agent or representative in the State upon whom notices referred to in the General Conditions of these Specifications may be served. Services of said notice on said agent or representative in the State shall be equal to service of notice on the President of the Surety Company, or such other officer as may be concerned.

03.07 In conformance with LSA-R.S. 38:2219(A)(1)(a), (b), and (c):

> Any surety bond written for a public works project shall be written by a surety or insurance company currently on the U.S. Department of the Treasury Financial Management Service list of approved bonding companies which is published annually in the Federal Register, or by a Louisiana domiciled insurance company with at least an A- rating in the latest printing of the A.M. Best's Key Rating Guide, to write individual bonds up to ten percent of policyholders' surplus as shown in the A.M. Best's Key Rating Guide or by an insurance company that is either domiciled in Louisiana or owned by Louisiana residents and is licensed to write surety bonds.
>
> For any public works project, no surety or insurance company shall write a bond which is in excess of the amount indicated as approved by the U.S. Department of the Treasury Financial Management Service list or by a Louisiana domiciled insurance company with an A- rating by A.M. Best up to a limit of ten percent of policyholders' surplus as shown by A.M. Best; companies authorized by this Paragraph who are not on the treasury list shall not write a bond when the penalty exceeds fifteen percent of its capital and surplus, such capital and surplus being the amount by which the company's assets exceed its liabilities as reflected by the most recent financial statements filed by the company with the Department of Insurance.
>
> In addition, any surety bond written for a public works project shall be written by a surety or insurance company that is currently licensed to do business in the state of Louisiana. All contractors must comply with any other applicable provisions of LSA-R.S. 38:2219.

03.08 Should the Contractor's Surety, even though approved and accepted by the Owner, subsequently remove its agency or representative from the State or become insolvent, bankrupt, or otherwise fail, the Contractor shall immediately furnish a new Bond in another company approved by the Owner, at no cost to the Owner. The new Bond shall be executed under the same terms and conditions as the original Bond. The new bond shall be submitted within thirty (30) days of such time as the Owner notifies Contractor or from the time Contractor learns or has reason to know that the original surety is no longer financially viable or acceptable to the Parish, whichever occurs first. In the event that Contractor fails

or refuses to timely secure additional surety, then the Owner may secure such surety and thereafter deduct such cost or expense from any sum due or to become due Contractor.

03.09 The Contractor's bondsman shall obligate itself to all the terms and covenants of these Specifications and of contracts covering the Work executed hereunder. The Owner reserves the right to do Extra Work or make changes by altering, adding to deducting from the Work under the conditions and in the manner herein before described without notice to the Contractor's surety and without in any manner affecting the liability of bondsman or releasing it from any of its obligations hereunder.

03.10 The Bond shall also secure for the Owner the faithful performance of the Contract in strict accordance with plans and Specifications. It shall protect the Owner against all lien laws of the State and shall provide for payment of reasonable attorney fees for enforcement of Contract and institution or concursus proceedings, if such proceedings become necessary. Likewise, it shall provide for all additional expenses of the Owner occurring through failure of the Contractor to perform.

03.11 The surety of the Contractor shall be and does hereby declare and acknowledge itself by acceptance to be bound to the Owner as a guarantor, jointly and in solido, with the Contractor, for fulfillment of terms of Section 03.00.

03.12 The performance Bond and Labor and Material Bond forming part of this Contract shall be continued by Contractor and its Surety for a period of one (1) year from date of acceptance of this Contract by Owner to assure prompt removal and replacement of all defective material, equipment, components thereof, workmanship, etc., and to assure payment of any damage to property of Owner or others as a result of such defective materials, equipment, workmanship, etc.

03.13 Contractor shall pay for the cost of recording the Contract and Bond and the cost of canceling same. Contractor shall also secure and pay for all Clear Lien and Privilege Certificates (together with any updates) which will be required before any final payment is made, and that may be required before any payment, at the request of the Owner, its representative, agent, architect, engineer and the like. All recordation and Clear Lien and Privilege Certificate requirements shall be in accordance with those requirements noted herein before in contract Specifications.

04.00 SUBCONTRACTS

04.01 Contractor shall be fully responsible for all acts and omissions of its Subcontractors and of persons and organizations for whose acts any of them may be liable to the same extent that it is responsible for the acts and omissions of persons directly employed by it. Nothing in the Contract Documents shall create any contractual relationship between Owner and any Subcontractor or other person or organization having a direct Contract with Contractor, nor shall it create any obligation on the part of the Owner to pay or to see to the payment of any monies due any Subcontractor.

04.02 Nothing in the Contract Documents shall be construed to control the Contractor in dividing the Work among approved Subcontractors or delineating the Work to be performed by any trade.

04.03 The Contractor agrees to specifically bind every Subcontractor to all of the applicable terms and conditions of the Contract Documents prior to commencing Work. Every Subcontractor, by undertaking to perform any of the Work, shall thereby automatically be deemed bound by such terms and conditions.

04.04 The Contractor shall indemnify and hold harmless the Owner and their agents and employees from and against all claims, damages, losses and expenses including Attorney's fees arising out of or resulting from the Contractor's failure to bind every Subcontractor and Contractor's surety to all of the applicable terms and conditions of the Contract Documents.

05.00 ASSIGNMENT

05.01 Neither party to this Contract shall assign or sublet its interest in this Contract without prior written consent of the other, nor shall the Contractor assign any monies due or to become due to it under this Contract without previous written consent of the Owner, nor without the consent of the surety unless the surety has waived its right to notice of assignment.

06.00 CORRELATION, INTERPRETATION AND INTENT OF CONTRACT DOCUMENTS.

06.01 It is the intent of the Specifications and Drawings to describe a complete Project to be constructed in accordance with the Contract Documents. The Contract Documents comprise the entire Agreement between Owner and Contractor. Alterations, modifications and amendments shall only be in writing between these parties.

06.02 The Contract Documents are intended to be complimentary and to be read *in pari materii*, and what is called for by one is as binding as if called for by all. If Contractor finds a conflict, error or discrepancy in the Contract Documents, it shall call it to the Owner's attention, in writing, at once and before proceeding with the Work affected thereby; however, it shall be liable to Owner for its failure to discover any conflict, error or discrepancy in the Specifications or Drawings. In resolving such conflicts, errors and discrepancies, the documents shall be given precedence in the following order: Agreement, Modifications, Addenda, Special Conditions, General Conditions, Construction Specifications and Drawings. The general notes on the plans shall be considered special provisions. Figure dimensions on Drawings shall govern over scale dimensions and detail Drawings shall govern over general Drawings. Where sewer connections are shown to fall on a lot line between two lots, the Contractor shall determine this location by measurement not by scale. Any Work that may reasonably be inferred from the Specifications or Drawings as being required to produce the intended result shall be supplied whether or not it is specifically called for. Work, materials or equipment described herein which so applied to this Project are covered by a well-known technical meaning or specification shall be deemed to be governed by such recognized standards unless specifically excluded.

06.03 Unless otherwise provided in the Contract Documents, the Owner will furnish to the Contractor (free of charge not to exceed ten (10) copies) Drawings and Specifications for the execution of Work. The Drawings and Specifications are the property of the Owner and are to be returned to it when the purpose for which they are intended have been served. The Contractor shall keep one copy of all Drawings and Specifications, including revisions, Addenda, details, Shop Drawings, etc. on the Work in good order and available to the Owner or the regulatory agency of the governmental body having jurisdiction in the area of the Work.

07.00 SHOP DRAWINGS, BROCHURES AND SAMPLES

07.01 After checking and verifying all field measurements, Contractor shall submit to Owner for approval, five copies (or at Owner's option, one reproducible copy) of all Shop Drawings, which shall have been checked by and stamped with the approval of Contractor and identified as Owner may require. The data shown on the Shop Drawings will be complete with respect to dimensions, design criteria, materials of construction and the like to enable Owner to review the information as required.

07.02 Contractor shall also submit to Owner, for review with such promptness as to cause no delay in Work, all samples as required by the Contract Documents. All samples will have been checked by and stamped with the approval of Contractor identified clearly as to material, manufacturer, any pertinent catalog numbers and the use for which intended. At the time of each submission, Contractor shall in writing call Owner's attention to any deviations that the Shop Drawings or samples may have from the requirements of the Contract Documents.

07.03 Owner will review with reasonable promptness Shop Drawings and samples, but its review shall be only for conformance with the design concept of the Project and for compliance with the information given in the Contract Documents. The review of a separate item as such will not indicate approval of the assembly in which the item functions. Contractor shall make any corrections required by Owner and shall return the required number of

corrected copies of Shop Drawings and resubmit new samples for review. Contractor shall direct specific attention in writing or on resubmitted Shop Drawings to revisions other than the corrections called for by Owner on previous submissions. Contractor's stamp of approval on any Shop Drawing or sample shall constitute a representation to Owner that Contractor has determined and verified all quantities, dimensions, field construction criteria, materials catalog numbers and similar data and thereafter assumes full responsibility for doing so, and that it has reviewed or coordinated each Shop Drawing or sample with the requirements of the Work and the Contract Documents.

07.04 Where a Shop Drawing or sample submission is required by the Specifications, no related Work shall be commenced until the submission has been reviewed by Owner. A copy of each reviewed shop Drawing and each inspected sample shall be kept in good order by Contractor at the site and shall be available to Owner.

07.05 Owner's review of Shop Drawings or samples shall not relieve Contractor from its responsibility for any deviations from the requirements of the Contract Documents unless Contractor has in writing called Owner's attention to such deviation at the time of submission and Owner has given written approval to the specific deviation, nor shall any review by Owner relieve Contractor from responsibility for errors or omissions in the Shop Drawings. The mere submittal of shop drawings which contain deviations from the requirements of plans, specifications and/or previous submittals in itself does not satisfy this requirement.

08.00 RECORD DRAWINGS

08.01 The Contractor shall keep an accurate record in a manner approved by the Owner of all changes in the Contract Documents during construction. In Work concerning underground utilities, the Contractor shall keep an accurate record in a manner approved by the Owner of all valves, fittings, etc. Before the Work is accepted by the Owner, and said acceptance is recorded, the Contractor shall furnish the Owner a copy of this record.

08.02 Contractor shall keep an accurate drawing measured in the field to the nearest 0.1' of the location of all sewer house connections. The location shown shall be the end of the connection at the property line measured along the main line of pipe from a manhole.

08.03 Contractor shall keep an accurate drawing of the storm water drainage collection system. Inverts to the nearest 0.01' and top of castings shall be shown as well as location of all structures to the nearest 0.1'. Upon completion of the Work, the plan will be given to the Owner.

09.00 PROGRESS OF WORK

09.01 Contractor shall conduct the Work in such a professional manner and with sufficient materials, equipment and labor as is considered necessary to ensure its completion within the time limit specified.

09.02 The Owner shall issue a Notice to Proceed to the Contractor within twenty (20) calendar days from the date of execution of the Contract. Upon mutual consent by both parties, the Notice to Proceed may be extended. The Contractor is to commence Work under the Contract within ten (10) calendar days from the date the Notice to Proceed is issued by the Owner.

09.03 The Contractor, immediately after being awarded the Contract, shall prepare and submit for the Owner's approval an estimated progress schedule for the work to be performed, as well as a construction signing layout for all roads within the project area. The Contractor shall not start work or request partial payment until the work schedule has been submitted to the Owner for approval.

09.04 Revisions to the original schedule will be made based on extension of days granted for inclement weather or change orders issued under the contract. No other revision shall be made which affects the original completion or updated completion date, whichever is applicable.

09.05 Failure of the Contractor to submit an estimated progress schedule or to complete timely and on schedule the Work shown on the progress schedule negates any and all causes or claims by the Contractor for accelerated completion damages. These accelerated damage claims shall be deemed forfeited.

09.06 Meetings will be held as often as necessary to expedite the progress of the job. Meetings will be held during normal working hours at the jobsite and shall be mandatory for the Contractor and all Sub-Contractors working on the project. Meetings may be requested by the Owner at any time and at the discretion of the Owner.

10.00 OWNER'S RIGHT TO PROCEED WITH PORTIONS OF THE WORK

10.01 Upon failure of the Contractor to comply with any notice given in accordance with the provisions hereof, the Owner shall have the alternative right, instead of assuming charge of the entire Work, to place additional forces, tools, equipment and materials on parts of the Work. The cost incurred by the Owner in carrying on such parts of the Work shall be payable by the Contractor. Such Work shall be deemed to be carried on by the Owner on account of the Contractor. The Owner may retain all amounts of the cost of such Work from any sum due Contractor or those funds that may become due to Contractor under this Agreement.

10.02 Owner may perform additional Work related to the Project by itself or it may let any other direct contract which may contain similar General Conditions. Contractor shall afford the other contractors who are parties to such different contracts (or Owner, if it is performing the additional Work itself) reasonable opportunity for the introduction and storage of materials and equipment and the execution of Work, and shall properly connect and coordinate its Work with the subsequent work.

10.03 If any part of Contractor's Work depends upon proper execution or results upon the Work of any such other contractor (or Owner), Contractor shall inspect and promptly report to Owner in writing any defects or deficiencies in such Work that render it unsuitable for such proper execution and results. Failure to so report shall constitute an acceptance of the other Work as fit and proper for the relationship of its Work except as to defects and deficiencies which may appear in the other Work after the execution of its Work.

10.04 Whatever Work is being done by the Owner, other Contractors or by this Contractor, the parties shall respect the various interests of the other parties at all times. The Owner may, at its sole discretion, establish additional rules and regulations concerning such orderly respect of the rights of various interests.

10.05 Contractor shall do all cutting, fitting and patching of its Work that may be required to integrate its several parts properly and fit to receive or be received by such other Work. Contractor shall not endanger any Work of others by cutting, excavating or otherwise altering Work and will only alter Work with the written consent of Owner and of the other contractors whose Work will be affected.

10.06 If the performance of additional Work by other contractors or Owner is not noted in the Contract Documents, written notice thereof shall be given to Contractor prior to starting any such additional Work. If Contractor believes that the performance of such additional Work by Owner or others may cause additional expense or entitles an extension of the Contract Time, the Contractor may make a claim therefor. The claim must be in writing to the Owner within thirty (30) calendar days of receipt of notice from the Owner of the planned additional Work by others.

11.00 TIME OF COMPLETION

11.01 The Notice to Proceed will stipulate the date on which the Contractor shall begin work. That date shall be the beginning of the Contract Time charges.

11.02 Contractor shall notify the Owner through its duly authorized representative, in advance, of where Contractor’s work shall commence each day. A daily log shall be maintained by Contractor to establish dates, times, persons contacted, and location of work. Specific notice shall be made to the Owner if the Contractor plans to work on Saturday, Sunday, or

a Parish approved holiday. If notice is not received, no consideration will be given for inclement weather and same shall be considered a valid work day.

11.03 The Work covered by the Plans, Specifications and Contract Documents must be completed sufficiently for acceptance within the number of calendar days specified in the Proposal and/or the Contract, commencing from the date specified in the Notice to Proceed. It is hereby understood and mutually agreed, by and between the Contractor and the Owner, that the time of completion is an essential condition of this Contract, and it is further mutually understood and agreed that if the Contractor shall neglect, fail or refuse to complete the Work within the time specified, or any proper extension thereof granted by the Owner, then the Contractor does hereby agree, as partial consideration for the awarding of this Contract, to pay the Owner based on **Table 3.1** as specified in the Contract, not as a penalty, but as liquidated damages for such breach of contract for each and every calendar day that the Contractor shall be in default after the time stipulated in the Contract for completing the Work. It is specifically understood that the Owner shall also be entitled to receive a reasonable attorney fee and all costs in the event that Contractor fails to adhere to this agreement and this contract is referred to counsel for any reason whatsoever. Reasonable attorney fees shall be the prevailing hourly rate of the private sector, and in no event shall the hourly rate be less than $175.00 per hour. All attorney fees shall be paid to the operating budget of the Office of the Parish President.

11.04 Prior to final payment, the Contractor may, in writing to the Owner, certify that the entire Project is substantially complete and request that the Owner or its agent issue a certificate of Substantial Completion. See Section 29.00.

11.05 The Owner may grant an extension(s) of time to the Contractor for unusual circumstances which are beyond the control of the Contractor and could not reasonably be foreseen by the Contractor prior to Bidding. Any such request must be made in writing to the Owner within seven (7) calendar days following the event occasioning the delay. The Owner shall have the exclusive and unilateral authority to determine, grant, and/or deny the validity of any such claim.

11.06 Extensions of time for inclement weather shall be processed as follows:

Commencing on the start date of each job, the Parish Inspector assigned to same shall keep a weekly log, indicating on each day whether inclement weather has prohibited the Contractor from working on any project within the specific job, based upon the following:

1. Should the Contractor prepare to begin work on any day in which inclement weather, or the conditions resulting from the weather, prevent work from beginning at the usual starting time, and the crew is dismissed as a result, the Contractor will not be charged for a working day whether or not conditions change during the day and the rest of the day becomes suitable for work.

2. If weather conditions on the previous day prevent Contractor from performing work scheduled, provided that no other work can be performed on any project within the package. The Parish Inspector shall determine if it is financially reasonable to require the Contractor to deviate from the schedule and relocate to another location.

3. If the Contractor is unable to work at least 60% of the normal work day due to inclement weather, provided that a normal working force is engaged on the job.

Any dispute of weather conditions as related to a specific job shall be settled by records of the National Weather Service.

11.07 Extensions of time for change orders

When a change order is issued, the Owner and Contractor will agree on a reasonable time extension, if any, to implement such change. Consideration shall be given for, but not limited to, the following:

1. If material has to be ordered;
2. Remobilization and or relocation of equipment to perform task; and
3. Reasonable time frame to complete additional work.

Time extensions for change orders shall be reflected on the official document signed by the Owner and Contractor.

11.08 At the end of each month, the Owner or its agent will furnish to the Contractor a monthly statement which reflects the number of approved days added to the contract. The Contractor will be allowed fourteen (14) calendar days in which to file a written protest setting forth in what respect the monthly statement is incorrect; otherwise, the statement shall be considered accepted by the Contractor as correct.

11.09 Apart from extension of time for unavoidable delays, no payment or allowance of any kind shall be made to the Contractor as compensation for damages because of hindrance or delay for any cause in the progress of the Work, whether such delay be avoidable or unavoidable.

12.00 LIQUIDATED DAMAGES

12.01 In case the Work is not completed in every respect within the time that may be extended, it is understood and agreed that per diem deductions per **Table 3.1** for liquidated damages, as stipulated in the Proposal and/or Contract, shall be made from the total Contract Price for each and every calendar day after and exclusive of the day on which completion was required, and up to the completion of the Work and acceptance thereof by the Owner. It is understood and agreed that time is of the essence to this Contract, and the above sum being specifically herein agreed upon in advance as the measure of damages to the Owner on account of such delay in the completion of the Work. It is further agreed that the expiration of the term herein assigned or as may be extended for performing the Work shall, *ipso facto*, constitute a putting in default, the Contractor hereby waiving any and all notice of default. The Contractor agrees and consents that the Contract Price, reduced by the aggregate of the entire damages so deducted, shall be accepted in full satisfaction of all Work executed under this Contract. It is further understood and agreed that Contractor shall be liable for a reasonable attorney fee and all costs associated with any breach of this agreement, including but not limited to this subsection. In the event that any dispute or breach herein causes referrals to counsel, then Contractor agrees to pay a reasonable attorney fee at the prevailing hourly rate of the private sector. In no event shall the hourly rate be less than $175.00 per hour.

13.00 LABOR, MATERIALS, EQUIPMENT, SUPERVISION, PERMITS AND TAXES

13.01 The Contractor shall provide and pay for all labor, materials, equipment, supervision, subcontracting, transportation, tools, fuel, power, water, sanitary facilities and all incidentals necessary for the completion of the Work in substantial conformance with the Contract Documents.

13.02 The Contractor shall provide competent, suitably qualified personnel to survey and lay out the Work and perform construction as required by the Contract Documents. It shall at all times maintain good discipline and order at the site.

13.03 Unless otherwise specifically provided for in the Specifications, all workmanship, equipment, materials, and articles incorporated in the Work covered by this Contract are to be new and of the best grade of their respective kinds for the purpose intended. Samples of materials furnished under this Contract shall be submitted for approval to the Owner when and as directed.

13.04 Whenever a material or article required is specified or shown on the plans by using the name of a proprietary product or of a particular manufacturer or vendor, any material or article which shall perform adequately the duties imposed by the general design will be considered equal, and satisfactory, providing the material or article so proposed is of equal substance and function and that all technical data concerning the proposed substitution be approved by the Owner prior to the Bidding. The Owner shall have the exclusive and unilateral discretion to determine quality and suitability in accordance with LSA-R.S. 38:2212(T)(2).

13.05 Materials shall be properly and securely stored so as to ensure the preservation of quality and fitness for the Work, and in a manner that leaves the material accessible to inspection. Materials or equipment may not be stored on the site in a manner such that it will interfere with the continued operation of streets and driveways or other contractors working on the site.

13.06 The Contractor, by entering into the Contract for this Work, sets itself forth as an expert in the field of construction and it shall supervise and direct the Work efficiently and with its best skill and attention. It shall be solely responsible for the means, methods, techniques, sequences and procedures of construction.

13.07 Contractor shall keep on the Work, at all times during its progress, a competent resident Superintendent, who shall not be replaced without written Notice to Owner except under extraordinary circumstances. The Superintendent will be Contractor's representative at the site and shall have authority to act on behalf of Contractor. All communications given to the Superintendent shall be as binding as if given to the Contractor. Owner specifically reserves the right to approve and/or disapprove the retention of a new superintendent, all to not be unreasonably withheld.

13.08 Any foreman or workman employed on this Project who disregards orders or instructions, does not perform his Work in a proper and skillful manner, or is otherwise objectionable, shall, at the written request of the Owner, be removed from the Work and shall be replaced by a suitable foreman or workman.

13.09 The Contractor and/or its assigned representative shall personally ensure that all subcontracts and divisions of the Work are executed in a proper and workmanlike manner, on scheduled time, and with due and proper cooperation.

13.10 Failure of the Contractor to keep the necessary qualified personnel on the Work shall be considered cause for termination of the Contract by the Owner.

13.11 Only equipment in good working order and suitable for the type of Work involved shall be brought onto the job and used by the Contractor. The Contractor is solely responsible for the proper maintenance and use of its equipment and shall hold the Owner harmless from any damages or suits for damages arising out of the improper selection or use of equipment. No piece of equipment necessary for the completion of the Work shall be removed from the job site without approval of the Owner.

13.12 All Federal, State and local taxes due or payable during the time of Contract on materials, equipment, labor or transportation, in connection with this Work, must be included in the amount bid by the Contractor and shall be paid to proper authorities before acceptance. The Contractor shall furnish all necessary permits and certificates and comply with all laws and ordinances applicable to the locality of the Work. The cost of all inspection fees levied by any governmental entity whatsoever shall be paid for by the Contractor.

13.13 In accordance with St. Tammany Police Jury Resolution 86-2672, as amended, the Contractor must provide in a form suitable to the Owner an affidavit stating that all applicable sales taxes for materials used on this project have been paid.

13.14 During the period that this Contract is in force, neither party to the Contract shall solicit for employment or employ an employee of the other.

13.15 All materials or equipment shown on the Drawings or included in these specifications shall be furnished unless written approval of a substitute is obtained from the Designer, or Owner if no separate designer.

13.16 If a potential supplier wishes to submit for prior approval a particular product other than a product specified in the contract documents, he shall do so no later than seven working days prior to the opening of bids. Within three days, exclusive of holidays and weekends, after such submission, the prime design professional shall furnish to both the public entity and the potential supplier written approval or denial of the product submitted. The burden of proof of the equality of the proposed substitute is upon the proposer and only that information formally submitted shall be used by the Designer in making its decision.

13.17 The decision of the Designer/Owner shall be given in good faith and shall be final.

14.00 QUANTITIES OF ESTIMATE, CHANGES IN QUANTITIES, EXTRA WORK

14.01 Whenever the estimated quantities of Work to be done and materials to be furnished under this Contract are shown in any of the documents, including the Proposal, such are given for use in comparing Bids and the right is especially reserved, except as herein otherwise specifically limited, to increase or diminish same not to exceed twenty-five percent (25%) by the Owner to complete the Work contemplated by this Contract. Such increase or diminution shall in no way vitiate this Contract, nor shall such increase or diminution give cause for claims or liability for damages.

14.02 The Owner shall have the right to make alterations in the line, grade, plans, form or dimensions of the Work herein contemplated, provided such alterations do not change the total cost of the Project, based on the originally estimated quantities, and the unit prices bid by more than twenty-five percent (25%) and provided further that such alterations do not change the total cost of any major item, based on the originally estimated quantities and the unit price bid by more than twenty-five (25%). (A major item shall be construed to be any item, the total cost of which is equal to or greater than ten percent (10%) of the total Contract Price, computed on the basis of the Proposal quantity and the Contract unity price). Should it become necessary, for the best interest of the Owner, to make changes in excess of that herein specified, the same shall be covered by supplemental agreement either before or after the commencement of the Work and without notice to the sureties. If such alterations diminish the quantity of Work to be done, such shall not constitute a claim for damages for anticipated profits for the Work dispensed with, but when the reduction in amount is a material part of the Work contemplated, the Contractor shall be entitled to only reasonable compensation as determined by the Owner for overhead and equipment charges which it may have incurred in expectation of the quantity of Work originally estimated, unless specifically otherwise provided herein; if the alterations increase the amount of Work, the increase shall be paid according to the quantity of Work actually done and at the price established for such Work under this Contract except where, in the opinion of the Owner, the Contractor is clearly entitled to extra compensation.

14.03 Without invalidating the Contract, the Owner may order Extra Work or make changes by altering, adding to, or deducting from the Work, the Contract sum being adjusted accordingly. The consent of the surety must first be obtained when necessary or desirable, all at the exclusive discretion of the Owner. All the Work of the kind bid upon shall be paid for at the price stipulated in the Proposal, and no claims for any Extra Work or material shall be allowed unless the Work is ordered in writing by the Owner.

14.04 Extra Work for which there is no price or quantity included in the Contract shall be paid for at a unit price or lump sum to be agreed upon in advance in writing by the Owner and Contractor. Where such price and sum cannot be agreed upon by both parties, or where this method of payment is impracticable, the Owner may, at its exclusive and unilateral discretion, order the Contractor to do such Work on a Force Account Basis.

14.05 In computing the price of Extra Work on a Force Account Basis, the Contractor shall be paid for all foremen and labor actually engaged on the specific Work at the current local rate of wage for each and every hour that said foremen and labor are engaged in such Work, plus ten percent (10%) of the total for superintendence, use of tools, overhead, direct & indirect costs/expenses, pro-rata applicable payroll taxes, pro-rata applicable workman compensation benefits, pro-rata insurance premiums and pro-rata reasonable profit. The Contractor shall furnish satisfactory evidence of the rate or rates of such insurance and tax. The Contractor will not be able to collect any contribution to any retirement plans or programs.

14.06 For all material used, the Contractor shall receive the actual cost of such material delivered at the site of the Work, as shown by original receipted bill, to which shall be added five percent (5%). There will be absolutely no additional surcharges or additional fees attached hereto with respect to this subsection.

14.07 For any equipment used that is owned by the Contractor, the Contractor shall be allowed a rental based upon the latest prevailing rental price, but not to exceed a rental price as determined by the Associated Equipment Distributors (A.E.D. Green Book).

14.08 The Contractor shall also be paid the actual costs of transportation for any equipment which it owns and which it has to transport to the Project for the Extra Work. There will be absolutely no additional surcharges or additional fees attached hereto with respect to this subsection.

14.09 If the Contractor is required to rent equipment for Extra Work, but not required for Contract items, it will be paid the actual cost of rental and transportation of such equipment to which no percent shall be added. The basis upon which rental cost are to be charged shall be agreed upon in writing before the Work is started. Actual rental and transportation costs shall be obtained from receipted invoices and freight bills.

14.10 No compensation for expenses, fees or costs incurred in executing Extra Work, other than herein specifically mentioned herein above, will be allowed.

14.11 A record of Extra Work on Force Account basis shall be submitted to the Owner on the day following the execution of the Work, and no less than three copies of such record shall be made on suitable forms and signed by both the Owner or his representative on the Project and the Contractor. All bids for materials used on extra Work shall be submitted to the Owner by the Contractor upon certified statements to which will be attached original bills covering the costs of such materials.

14.12 Payment for Extra Work of any kind will not be allowed unless the same has been ordered in writing by the Owner.

15.00 STATUS OF THE ENGINEER (NOT APPLICABLE)

16.00 INJURIES TO PERSONS AND PROPERTY

16.01 The Contractor shall be held solely and exclusively responsible for all injuries to persons and for all damages to the property of the Owner or others caused by or resulting from the negligence of itself, its employees or its agents, during the progress of or in connection with the Work, whether within the limits of the Work or elsewhere under the Contract proper or as Extra Work. This requirement will apply continuously and not be limited to normal working hours or days. The Owner's construction review is for the purpose of checking the Work product produced and does not include review of the methods employed by the Contractor or to the Contractor's compliance with safety measures of any nature whatsoever. The Contractor agrees to pay a reasonable attorney fee and other reasonable attendant costs of the Owner in the event it becomes necessary for the Owner to employ an attorney to enforce this section or to protect itself against suit over the Contractor's responsibilities. Attorney fees shall be at the prevailing hourly rate of the private sector. The attorney fee hourly rate shall not be less than $175.00 per hour. All attorney fees collected shall be paid to the operating budget of the Office of the Parish President.

16.02 The Contractor must protect and support all utility infrastructures or other properties which are liable to be damaged during the execution of its Work. It shall take all reasonable and proper precautions to protect persons, animals and vehicles or the public from the injury, and wherever necessary, shall erect and maintain a fence or railing around any excavation, and place a sufficient number of lights about the Work and keep same burning from twilight until sunrise, and shall employ one or more watchmen as an additional security whenever needed. The Contractor understands and agrees that the Owner may request that security be placed on the premises to ensure and secure same. The Owner shall exclusive authority to request placement of such security. Contractor agrees to retain and place security as requested, all at the sole expense of Contractor. Additional security shall not be considered a change order or reason for additional payment by the Owner. The Contractor must, as far as practicable and consistent with good construction, permit access to private and public property and leave fire hydrants, catch basins, streets, etc., free from encumbrances. The Contractor must restore at its own expense all injured or damaged property caused by any negligent act of omission or commission on its part or on the part of its employees or subcontractors, including, but not limited to, sidewalks, curbing, sodding, pipes conduits, sewers, buildings, fences, bridges, retaining walls, tanks, power lines, levees or any other building or property whatsoever to a like condition as existed prior to such damage or injury.

16.03 In case of failure on the part of the Contractor to restore such property or make good such damage, the Owner may upon forty-eight (48) hours' notice proceed to repair or otherwise restore such property as may be deemed necessary, and the cost thereof will be deducted from any monies due or which may become due under its Contract.

16.04 Contractor agrees to protect, defend, indemnify, save, and hold harmless St. Tammany Parish Government, its elected and appointed officials, departments, agencies, boards and commissions, their officers, agents servants, employees, including volunteers, from and against any and all claims, demands, expense and liability arising out of injury or death to any person or the damage, loss or destruction of any property to the extent caused by any negligent act or omission or willful misconduct of Contractor, its agents, servants, employees, and subcontractors, or any and all costs, expense and/or attorney fees incurred by St. Tammany Parish Government as a result of any claim, demands, and/or causes of action that results from the negligent performance or non-performance by Contractor, its agents, servants, employees, and subcontractors of this contract. Contractor agrees to investigate, handle, respond to, provide defense for and defend any such claims, demand, or suit at its sole expense and agrees to bear all other costs and expenses related thereto caused by any negligent act or omission or willful misconduct of Contractor, its agents, servants, employees, and subcontractors.

16.05 As to any and all claims against Owner, its agents, assigns, representatives or employees by any employee of Contractor, any Subcontractor, anyone directly or indirectly employed by any of them or anyone for whose acts as may be liable, the indemnification obligation under Paragraph 16.04 shall not be limited in any way or by any limitation on the amount or type of damages, compensation or benefits payable by or for Contractor or any Subcontractor under workmen's compensation acts, disability benefit acts or other employee benefit acts.

16.06 No road shall be closed by the Contractor to the public except by written permission of the Owner. If so closed, the Contractor shall maintain traffic over, through and around the Work included in his Contract, with the maximum practical convenience, for the full twenty-four hours of each day of the Contract, whether or not Work has ceased temporarily. The Contractor shall notify the Owner at the earliest possible date after the Contract has been executed and, in any case, before commencement of any construction that might in any way inconvenience or endanger traffic, in order that necessary and suitable arrangements may be determined. Any and all security, maintenance, labor or costs associated with traffic control herein shall be at the sole expense of Contractor. This expense shall be paid directly by the Contractor. This expense shall not be considered as a change order nor shall it allow the Contractor any additional cost reimbursement whatsoever. All traffic deviations herein shall be coordinated with the appropriate law enforcement officials of this Parish.

16.07 The convenience of the general public and residents along the Works shall be provided for in a reasonable, adequate and satisfactory manner. Where existing roads are not available as detours, and unless otherwise provided, all traffic shall be permitted to pass through the Work. In all such cases, the public shall have precedence over Contractor's vehicles insofar as the traveling public's vehicles shall not be unduly delayed for the convenience of the Contractor. In order that all unnecessary delay to the traveling public may be avoided, the Contractor shall provide and station competent flagmen whose sole duties shall consist of directing and controlling the movement of public traffic either through or around the Work. Any and all security, maintenance, labor or costs associated with traffic control herein shall be at the sole expense of Contractor. This expense shall be paid directly by the Contractor. This expense shall not be considered as a change order nor shall it allow the Contractor any additional cost reimbursement whatsoever. All traffic deviations herein shall be coordinated with the appropriate law enforcement officials of this Parish.

16.08 The Contractor shall arrange its Work so that no undue or prolonged blocking of business establishments will occur.

16.09 Material and equipment stored on the right of way or work site shall be so placed and the Work at times shall be so conducted as to ensure minimum danger and obstruction to the traveling public.

16.10 During grading operations when traffic is being permitted to pass through construction, the Contractor shall provide a smooth, even surface that will provide a satisfactory passageway

for use of traffic. The road bed shall be sprinkled with water if necessary to prevent a dust nuisance, provided the dust nuisance is a result of the Work.

16.11 Fire hydrants shall be accessible at all times to the Fire Department. No material or other obstructions shall be placed closer to a fire hydrant than permitted by ordinances, rules or regulations or within fifteen (15) feet of a fire hydrant, in the absence of such ordinance, rules or regulations.

16.12 The Contractor shall not, without the written permission of the Owner, do Work for a resident or property owner abutting the Work at the time that this Work is in progress.

16.13 No Work of any character shall be commenced on railroad right-of-way until the Railroad Company has issued a permit to the Owner and has been duly notified by the Contractor in writing (with a copy forwarded to the Owner) of the date it proposes to begin Work, and until an authorized representative of the Railroad Company is present, unless the Railroad Company waives such requirements. All Work performed by the Contractor within the right-of-way limits of the railroad shall be subject to the inspection and approval of the chief engineer of the Railroad Company or its authorized representative. Any precautions considered necessary by said chief engineer to safeguard the property, equipment, employees and passengers of the Railroad Company shall be taken by the Contractor without extra compensation. The Contractor shall, without extra compensation, take such precautions and erect and maintain such tell-tale or warning devices as the Railroad Company considers necessary to safeguard the operation of its trains. The temporary vertical and horizontal clearance specified by the chief engineer of the Railroad Company in approving these shall be maintained at all times. No steel, brick, pipe or any loose material shall be left on the ground in the immediate vicinity of the railway track. Before any Work is done within Railroad right of way, the Contractor shall provide and pay all costs of any special insurance requirements of the Railroad.

16.14 The Contractor, shall, without extra compensation, provide, erect, paint and maintain all necessary barricades. Also, without extra compensation, the Contractor shall provide suitable and sufficient lights, torches, reflectors or other warning or danger signals and signs, provide a sufficient number of watchmen and flagmen and take all the necessary precautions for the protection of the Work and safety of the Public.

16.15 The Contractor shall erect warning signs beyond the limits of the Project, in advance of any place on the Project where operations interfere with the use of the road by traffic, including all intermediate points where the new Work crosses or coincides with the existing road. All barricades and obstructions shall be kept well painted and suitable warning signs shall be placed thereon. All barricades and obstructions shall be illuminated at night and all lights or devices for this purpose shall be kept burning from sunset to sunrise.

16.16 Whenever traffic is maintained through or over any part of the Project, the Contractor shall clearly mark all traffic hazards. No direct payment will be made for barricades, signs and illumination therefore or for watchmen or flagmen.

16.17 The Contractor will be solely and completely responsible for conditions on the job site, including safety of all persons and property during performance of the Work. This requirement will apply continuously and not be limited to normal working hours. The duty of the Owner to conduct construction review of the Contractor's performance is not intended to include review of the adequacy of the Contractor's safety measures, in, or near the construction site.

17.00 SANITARY PROVISIONS

17.01 The Contractor shall provide and maintain in a neat, sanitary condition such accommodations for the use of its employees as may be necessary to comply with the rules and regulations of the State Health Agency or of the other authorities having jurisdiction and shall permit no public nuisance.

18.00 RIGHTS OF WAY

18.01 The Owner will furnish the Contractor with all necessary rights-of-way for the prosecution of the Work. The rights of way herein referred to shall be taken to mean only permission to use or pass through the locations or space in any street, highway, public or private property in which the Contractor is to prosecute the Work.

18.02 It is possible that all lands and rights of way may not be obtained as herein contemplated before construction begins, in which event the Contractor shall begin its Work upon such land and rights of way as the Owner may have previously acquired. Any delay in furnishing these lands by the Owner can be deemed proper cause for adjustment in the Contract amount and/or in the time of completion.

19.00 PROTECTION AND RESTORATION OF PROPERTY AND LANDSCAPE

19.01 The Contractor shall not enter upon private property for any purpose without first obtaining permission from the Owner, as well as the private property owner and/or and private property Lessees. The Contractor shall use every precaution necessary for the preservation of all public and private property, monuments, highway signs, telephone lines, other utilities, etc., along and adjacent to the Work; the Contractor shall use every precaution necessary to prevent damage to pipes, conduits, and other underground structures; and shall protect carefully from disturbance or damage all land monuments and property marks until an authorized agent has witnessed or otherwise referenced their location and shall not remove them until directed. The street and highway signs and markers that are to be affected by the Work shall be carefully removed when the Work begins and stored in a manner to keep them clean and dry. The Contractor must obtain all necessary information in regard to existing utilities and shall give notice in writing to the owners or the proper authorities in charge of streets, gas, water, pipes, electric, sewers and other underground structures, including conduits, railways, poles and pole lines, manholes, catch basins, fixtures, appurtenances, and all other property that may be affected by the Contractor's operations, at least forty-eight (48) hours before its operations will affect such property. The Contractor shall not hinder or interfere with any person in the protection of such Work or with the operation of utilities at any time. When property, the operation of railways, or other public utilities are endangered, the Contractor shall at its own expense, maintain flagmen or watchmen and any other necessary precautions to avoid interruption of service or damage to life or property, and it shall promptly repair, restore, or make good any injury or damage caused by its negligent operations in an acceptable manner. The Contractor must also obtain all necessary information in regard to the installation of new cables, conduits, and transformers, and make proper provisions and give proper notifications, in order that same can be installed at the proper time without delay to the Contractor or unnecessary inconvenience to the Owner.

19.02 The Contractor shall not remove, cut or destroy trees, shrubs, plants, or grass that are to remain in the streets or those which are privately owned, without the proper authority. Unless otherwise provided in the Special Provisions or the Proposal, the Contractor shall replace and replant all plants, shrubs, grass and restore the grounds back to its original good condition to the satisfaction of the Owner and/or the property owner. The Contractor shall assume the responsibility of replanting and guarantees that plants, shrubs, grass will be watered, fertilized and cultivated until they are in a growing condition. No direct payment will be made for removing and replanting of trees, shrubs, plants or grass unless such items are set forth in the Proposal.

19.03 When or where direct damage or injury is done to public or private property by or on account of any negligent act, omission, neglect or otherwise of the Contractor, it shall make good such damage or injury in an acceptable manner.

20.00 CONTRACTORS RESPONSIBILITY FOR WORK

20.01 Until final acceptance of the Work by the Owner as evidence by approval of the final estimate, the Work shall be in the custody and under the charge and care of the Contractor and it shall take every necessary precaution against injury or damage to any part thereof by the action of the elements or from the non-execution of the Work; unless otherwise provided for elsewhere in the Specifications or Contract. The Contractor shall rebuild, repair, restore and make good, without extra compensation, all injuries or damages to any portion of the Work occasioned by any of the above causes before its completion and

acceptance, and shall bear the expenses thereof. In case of suspension of the Work from any cause whatever, the Contractor shall be responsible for all materials and shall properly and securely store same, and if necessary, shall provide suitable shelter from damage and shall erect temporary structures where necessary. If in the exclusive discretion of the Owner, any Work or materials shall have been damaged or injured by reason of failure on the part of the Contractor or any of its Subcontractors to so protect the Work, such materials shall be removed and replaced at the sole expense of the Contractor. Such amount shall be deducted from any sum due or to be due Contractor.

20.02 The Contractor shall give all notice and comply with all Federal, State, and local laws, ordinances, and regulations in any manner affecting the conduct of the Work, and all such orders and decrees as exist, or may be enacted by bodies or tribunals having any jurisdiction or authority over the Work, and shall indemnify and hold harmless the Owner against any claim or liability arising from, or based on, the violation of any such law, ordinance, regulation, order or decree, whether by itself, its employees or Subcontractors.

21.00 TESTS AND INSPECTIONS CORRECTION & REMOVAL OF DEFECTIVE WORK

21.01 Contractor warrants and guarantees to Owner that all materials and equipment will be new unless otherwise specified and that all Work will be of good quality and free from faults or defects and in accordance with the requirements of the Contract Documents. All unsatisfactory Work, all faulty or Defective Work and all Work not conforming to the requirements of the Contract Documents at the time of acceptance shall be considered Defective. Prompt and reasonable notice of all defects shall be given to the Contractor.

21.02 If the Contract Documents, laws, ordinances, rules, regulations or orders of any public authority having jurisdiction require any Work to specifically be inspected, tested or approved by some public body, Contractor shall assume full responsibility therefor, pay all costs in connection therewith and furnish Owner the required certificates of inspection, testing or approval. All other inspections, tests and approval required by the Contract Documents shall be performed by organizations acceptable to Owner and Contractor and the costs thereof shall be borne by the Contractor unless otherwise specified.

21.03 Contractor shall give Owner timely notice of readiness of the Work for all inspections, tests or approvals. If any such Work required to be inspected, tested or approved is covered without written approval of Owner, it must, if requested by Owner, be uncovered for observation, and such uncovering shall be at Contractor's expense unless Contractor has given Owner timely notice of its intention to cover such Work and Owner has not acted with reasonable promptness in response to such notice.

21.04 Neither observations by Owner nor inspections, tests or approvals shall relieve Contractor from its obligations to perform the Work in accordance with the requirements of the Contract Document.

21.05 Owner and its representatives will at reasonable times have access to the Work. Contractor shall provide proper and safe facilities for such access and observation of the Work and also for any inspection or testing thereof by others.

21.06 If any Work is covered contrary to the written request of Owner, it must, be uncovered for Owner’s observation and replaced at Contractor's expense. If any Work has been covered which Owner has not specifically requested to observe prior to its being covered, or if Owner considers it necessary or advisable that covered Work be inspected or tested by others, the Contractor, at Owner's request, shall uncover, expose or otherwise make available for observations, inspections or testing as Owner may require, that portion of the Work in question, furnishing all necessary labor, material and equipment. If it is found that such Work is Defective, Contractor shall bear all the expenses of such uncovering, exposure, observation, inspection and testing and of satisfactory reconstruction, including compensation for additional professional services, and an appropriate deductive Change Order shall be issued. If, however, such Work is not found to be Defective, Contractor shall be allowed an increase in the Contract Price or an extension of the Contract Time, or both, directly attributable to such uncovering, exposure, observation, inspection, testing and reconstruction.

21.07 If the Work is Defective, or Contractor fails to supply sufficient skilled workmen or suitable materials or equipment, or if the Contractor fails to make prompt payments to Subcontractors or for labor, materials or equipment, Owner may order Contractor to stop the Work, or any portion thereof, until the cause of such order has been eliminated; however, this right of Owner to stop the Work shall not give rise to any duty on the part of Owner to exercise this right for the benefit of Contractor or any other party.

21.08 Prior to approval of final payment, Contractor shall promptly, without cost to Owner and as specified by Owner, either correct any Defective Work, whether or not fabricated, installed or completed, or if the Work has been rejected by Owner, remove it from the site and replace it with non-defective Work. If Contractor does not correct such Defective Work or remove and replace such rejected Work within a reasonable time, all as specified in a written notice from Owner, Owner may have the deficiency corrected or the rejected Work removed and replaced. All direct or indirect costs of such correction or removal and replacement including compensation for additional professional services shall be paid by Contractor, and an appropriate deductive Change Order shall be issued. Contractor shall also bear the expense of making good all Work of others destroyed or damaged by its correction, removal or replacement of its Defective Work.

21.09 If, after the approval of final payment and prior to the expiration of one year after the date of Substantial Completion or such longer period of time as may be prescribed by law or by the terms of any applicable special guarantee required by the Contract Documents, any Work is found to be Defective, Contractor shall promptly, without cost to Owner and in accordance with Owner's written instructions, either correct such Defective Work or if it has been rejected by Owner, remove it from the site and replace it with non-defective Work. If Contractor does not promptly comply with the terms of such instructions, Owner may have the Defective Work corrected or the rejected Work removed and replaced, and all direct and indirect costs of such removal and replacement, including compensation for additional professional services, shall be paid by Contractor. The Contractor agrees to pay a reasonable attorney fee and other reasonable attendant costs of the Owner in the event it becomes necessary for the Owner to employ an attorney to enforce this section or to protect itself against suit over the Contractor's responsibilities. Attorney fees shall be at the prevailing hourly rate of the private sector. The attorney fee hourly rate shall not be less than $175.00 per hour. All attorney fees collected shall be paid to the operating budget of the Office of the Parish President.

21.10 If, instead of requiring correction or removal and replacement of Defective Work, Owner (and prior to approval of final payment) prefers to accept it, the Owner may do so. In such case, if acceptance occurs prior to approval of final payment, a Change Order shall be issued incorporating the necessary revisions in the Contract Documents, including appropriate reduction in the Contract Price, or, if the acceptance occurs after approval of final payment, an appropriate amount shall be paid by Contractor to Owner.

21.11 If Contractor should fail to progress the Work in accordance with the Contract Documents, including any requirements of the Progress Schedule, Owner, after seven (7) days written Notice to Contractor, may, without prejudice to any other remedy Owner may have, make good such deficiencies and the cost thereof including compensation for additional professional services shall be charged against Contractor. In such cases, a Change Order shall be issued incorporating the necessary revisions in the Contract Documents including an appropriate reduction in the Contract Price. If the payments then or thereafter due Contractor are not sufficient to cover such amount, Contractor shall pay the difference to Owner.

21.12 The Owner may appoint representatives to make periodic visits to the site and observe the progress and quality of the executed Work. These representatives shall be governed by the same restrictions placed on the Owner by these Specifications. The governing body of the Federal, State or local government exercising authority in the area of the Work may appoint representatives to observe the progress and quality of the Work. Contractor shall cooperate with and assist these representatives in the performance of their duties.

21.13 The Contractor shall be responsible for the faithful execution of its Contract and the presence or absence of the Owner's or Government's Representative is in no way or manner to be presumed or assumed to relieve in any degree the responsibility or obligation of the Contractor.

21.14 The Contractor shall notify the Owner and the Governmental Agency having jurisdiction as to the exact time at which it is proposed to begin Work so the Owner may provide for inspection of all materials, foundations, excavations, equipment, etc., and all or any part of the Work and to the preparation or manufacture of materials to be used whether within the limits of the Work or at any other place.

21.15 The Owner or its representatives shall have free access to all parts of the Work and to all places where any part of the materials to be used are procured, manufactured or prepared. The Contractor shall furnish the Owner all information relating to the Work and the material therefor, which may be deemed necessary or pertinent, and with such samples of materials as may be required. The Contractor, at its own expense, shall supply such labor and assistance as may be necessary in the handling of materials for proper inspection or for inspection of any Work done by it.

21.16 No verbal instructions given to the Contractor by the Owner, Project Representative or any of their agents shall change or modify the written Contract. Contractors shall make no claims for additional payments or time based upon verbal instructions.

22.00 SUBSURFACE CONDITIONS

22.01 It is understood and agreed that the Contractor is familiar with the subsurface conditions that will be encountered and its price bid for the Work includes all of the costs involved for Work in these conditions and it is furthermore agreed that it has taken into consideration, prior to its Bid and acceptance by Owner, all of the subsurface conditions normal or unusual that might be encountered in the location of the Work.

22.02 Should the Contractor encounter during the progress of the Work subsurface conditions at the site materially differing from those shown on the Drawings or indicated in the Specifications, the attention of the Owner shall be directed to such conditions before the conditions are disturbed. If the Owner finds that the conditions materially differ from those shown on the Drawings or indicated in the Specifications, it shall at once make such changes in the Drawings or Specifications as it may find necessary, and any increase or decrease in cost or extension of time resulting from such changes shall be adjusted in the same manner as provided for changes for Extra Work. The Contractor shall submit breakdowns of all costs in a manner as instructed and approved by the Owner.

23.00 REMOVAL AND DISPOSAL OF STRUCTURES AND OBSTRUCTIONS

23.01 Bidder shall thoroughly examine the site of the Work and shall include in its Bid the cost of removing all structures and obstructions in the way of the Work.

23.02 The Contractor shall remove any existing structures or part of structures, fence, building or other encumbrances or obstructions that interfere in any way with the Work. Compensations for the removal of any structure shall be made only if the item(s) to be removed was/were listed as pay item(s) on the Proposal.

23.03 If called for in the Special Conditions, all privately and publicly owned materials and structures removed shall be salvaged without damage and shall be piled neatly and in an acceptable manner upon the premises if it belongs to an abutting property owner, otherwise at accessible points along the improvements. Materials in structures which is the property of the Owner or property of any public body, private body or individual which is fit for use elsewhere, shall remain property of the original Owner. It shall be carefully removed without damage, in sections which may be readily transported; same shall be stored on or beyond the right of way. The Contractor will be held responsible for the care and preservation for a period of ten (10) days following the day the last or final portion of the materials stored at a particular location are placed thereon. When privately owned materials are stored beyond the right of way, the Contractor will be held responsible for such care and preservation for a period of ten (10) days responsibility period for care and preservation of the materials begins. The Contractor must furnish the Owner with evidence satisfactory that the proper owner of the materials has been duly notified by the Contractor that the said owner must assume responsibility for its materials on the date following the Contractor's ten (10) day responsibility.

24.00 INSURANCE

24.01 Contractor shall secure and maintain at its expense such insurance that will protect it and the Parish from claims for injuries to persons or damages to property which may arise from or in connection with the performance of Services or Work hereunder by the Contractor, his agents, representatives, employees, and/or subcontractors. The cost of such insurance shall be included in Contractor's bid.

24.02 The Contractor shall not commence work until it has obtained all insurance as required for the Parish Project. If the Contractor fails to furnish the Parish with the insurance protection required and begins work without first furnishing Parish with a currently dated certificate of insurance, the Parish has the right to obtain the insurance protection required and deduct the cost of insurance from the first payment due the Contractor. Further deductions are permitted from future payments as are needed to protect the interests of the Parish including, but not limited to, renewals of all policies.

24.03 Payment of Premiums: The insurance companies issuing the policy or policies shall have no recourse against the Parish of St. Tammany for payment of any premiums or for assessments under any form of policy.

24.04 Deductibles: Any and all deductibles in the described insurance policies shall be assumed by and be at the sole risk of the Contractor.

24.05 Authorization of Insurance Company(ies) and Rating: All insurance companies must be authorized to do business in the State of Louisiana and shall have an A.M. Best rating of no less than A-, Category VII.

24.06 Policy coverages and limits must be evidenced by Certificates of Insurance issued by Contractor's carrier to the Parish and shall reflect:

Date of Issue: Certificate must have current date.

Named Insured: The legal name of Contractor under contract with the Parish and its principal place of business shall be shown as the named insured on all Certificates of Liability Insurance.

Name of Certificate Holder: St. Tammany Parish Government, Office of Risk Management, P. O. Box 628, Covington, LA 70434

Project Description: A brief project description, including Project Name, Project Number and/or Contract Number, and Location.

Endorsements and Certificate Reference: All policies must be endorsed to provide, and certificates of insurance must evidence the following:

Waiver of Subrogation: The Contractor's insurers will have no right of recovery or subrogation against the Parish of St. Tammany, it being the intention of the parties that all insurance policy(ies) so affected shall protect both parties and be the primary coverage for any and all losses covered by the below described insurance. *Policy endorsements required for all coverages*.

Additional Insured: The Parish of St. Tammany shall be named as additional named insured with respect to general liability, marine liability, pollution/environmental liability, automobile liability and excess liability coverages. *Policy endorsements required.*

Hold Harmless: Contractor's liability insurers shall evidence their cognizance of the Hold Harmless and Indemnification in favor of St. Tammany Parish Government by referencing same on the face of the Certificate(s) of Insurance.

Cancellation Notice: Producer shall provide thirty (30) days prior written notice to the Parish of policy cancellation or substantive policy change.

24.07 The types of insurance coverage the Contractor is required to obtain and maintain throughout the duration of the Contract, include, but is not limited to:

1. Commercial General Liability insurance with a Combined Single Limit for bodily injury and property damage of at least $1,000,000 per Occurrence/$3,000,000 General Aggregate/Products-Completed Operations Per Project. The insurance shall provide for and the certificate(s) of insurance shall indicate the following coverages:

    a) Premises - operations;
    b) Broad form contractual liability;
    c) Products and completed operations;
    d) Personal Injury;
    e) Broad form property damage;
    f) Explosion and collapse.

2. Marine Liability/Protection and Indemnity insurance is required for any and all vessel and/or marine operations in the minimum limits of $1,000,000 per occurrence/$2,000,000 per project general aggregate. The coverage shall include, but is not limited to, the basic coverages found in the Commercial General Liability insurance and coverage for third party liability.

3. Contractors' Pollution Liability and Environmental Liability insurance in the minimum amount of $1,000,000 per occurrence, $2,000,000 general aggregate and include coverage for full contractual liability and for all such environmental and/or hazardous waste exposures affected by this project.

4. Business Automobile Liability insurance with a Combined Single Limit of $1,000,000 per Occurrence for bodily injury and property damage, and shall include coverage for the following:

    a) Any automobiles;
    b) Owned automobiles;
    c) Hired automobiles;
    d) Non-owned automobiles;
    e) Uninsured motorist.

5. Workers' Compensation/Employers Liability insurance: worker's compensation insurance coverage and limits as statutorily required; Employers' Liability Coverage shall be not less than $1,000,000 each accident, $1,000,000 each disease, $1,000,000 disease policy aggregate, except when projects include exposures covered under the United States Longshoremen and Harbor Workers Act, Maritime and/or Jones Act and/or Maritime Employers Liability (MEL) limits shall be not less than $1,000,000/$1,000,000/$1,000,000. *Coverage for owners, officers and/or partners shall be included in the policy and a statement of such shall be made by the insuring producer on the face of the certificate.*

6. Owners Protective Liability (OPL) (formerly Owners and Contractors Protective Liability (OCP) Insurance) shall be furnished by the Contractor naming St. Tammany Parish Government as the Named Insured and shall provide coverage in the minimum amount of $1,000,000 combined single limit (CSL) each occurrence, $2,000,000 aggregate. Any project valued in excess of $3,000,000 shall be set by the Office of Risk Management. The policy and all endorsements shall be addressed to St. Tammany Parish Government, Office of Risk Management, P. O. Box 628, Covington, LA 70434.

7. Builder's Risk Insurance shall be required on buildings, sewage treatment plants and drainage pumping stations, and shall be written on an "all-risk" or equivalent policy form in the amount of the full value of the initial Contract sum, plus value of subsequent Contract modifications and cost of materials supplied or installed by others, comprising 100% total value for the entire project including foundations. Deductibles should not exceed $5,000 and Contractor shall be responsible for any and all policy deductibles. This insurance shall cover portions of the work stored off the site, and also portions of the work in transit. In addition, Installation Floater

Insurance, on an "all-risk" form, will be carried on all pumps, motors, machinery and equipment on the site or installed. Both the Builder's Risk Insurance and the Installation Floater Insurance shall include the interests of the Owner, Contractor, Subcontractors, and Sub-subcontractors and shall terminate only when the Project has been accepted. St. Tammany Parish Government, P. O. Box 628, Covington, LA 70434 shall be the first named insured on the Builder's Risk and Installation Floater Insurance.

8. Professional Liability (errors and omissions) insurance in the sum of at least One Million Dollars ($1,000,000) per claim with Two Million Dollars ($2,000,000) annual aggregate.

9. An umbrella policy or excess policy may be required and/or allowed to meet minimum coverage limits, subject to the review and approval by St. Tammany Parish Government, Office of Risk Management.

24.08 All policies of insurance shall meet the requirements of the Parish of St. Tammany prior to the commencing of any work. The Parish of St. Tammany has the right, but not the duty, to approve all insurance policies prior to commencing of any work. If at any time, it becomes known that any of the said policies shall be or becomes unsatisfactory to the Parish of St. Tammany as to form or substance; or if a company issuing any such policy shall be or become unsatisfactory to the Parish of St. Tammany, the Contractor shall promptly obtain a new policy, timely submit same to the Parish of St. Tammany for approval and submit a certificate thereof as provided above. The Parish agrees to not unreasonably withhold approval of any insurance carrier selected by Contractor. In the event that Parish cannot agree or otherwise authorize said carrier, Contractor shall have the option of selecting and submitting new insurance carrier within 30 days of said notice by the Parish. In the event that the second submission is insufficient or is not approved, then the Parish shall have the unilateral opportunity to thereafter select a responsive and responsible insurance carrier all at the cost of Contractor and thereafter deduct from Contractor's fee the cost of such insurance.

24.09 Upon failure of Contractor to furnish, deliver and/or maintain such insurance as above provided, the contract, at the election of the Parish of St. Tammany, may be forthwith declared suspended, discontinued or terminated. Failure of the Contractor to maintain insurance shall not relieve the Contractor from any liability under the contract, nor shall the insurance requirements be construed to conflict with the obligation of the Contractor concerning indemnification.

24.10 Contractor shall maintain a current copy of all annual insurance policies and provide same to the Parish of St. Tammany as may be reasonably requested.

24.11 It shall be the responsibility of Contractor to require that these insurance requirements are met by all contractors and sub-contractors performing work for and on behalf of Contractor. Contractor shall further ensure the Parish is named as additional insured on all insurance policies provided by said contractor and/or sub-contractor throughout the duration of the project, and that renewal certificates for any policies expiring prior to the Parish's final acceptance of the project shall be furnished to St. Tammany Parish Government, Department of Legal, Office of Risk Management, without prompting.

NOTICE:

These are only an indication of the coverages that are generally required. Additional coverages and/or limits may be required for projects identified as having additional risks or exposures. Please note that some requirements listed may not necessarily apply to your specific services. St. Tammany Parish Government reserves the right to remove, replace, make additions to and/or modify any and all of the insurance requirement language upon review of the final scope of services presented to Office of Risk Management prior to execution of a contract for services.

For inquiries regarding insurance requirements, please contact:
St. Tammany Parish Government
Office of Risk Management
P. O. Box 628
Covington, LA 70434
Telephone: 985-898-5226
Email: riskman@stpgov.org

24.12 Nothing contained in these insurance requirements is to be construed as limiting the extent of the Contractor's Responsibility for payment of damages resulting from its operations under this Contract.

25.00 OWNER'S RIGHT TO OCCUPANCY

25.01 The Owner shall have the right to use, at any time, any and all portions of the Work that have reached such a stage of completion as to permit such occupancy, provided such occupancy does not hamper the Contractor or prevent its efficient completion of the Contract or be construed as constituting an acceptance of any part of the Work.

25.02 The Owner shall have the right to start the construction of houses, structures or any other building concurrent with the Contractor's Work.

26.00 SURVEY HORIZONTAL AND VERTICAL CONTROL

26.01 The Owner shall provide surveys for construction to establish reference points which in its judgment are necessary to enable Contractor to layout and proceed with its Work. Contractor shall be responsible for surveying and laying out the Work and shall protect and preserve the established reference points and shall make no changes or relocations without the prior written approval of the Owner. Contractor shall report to Owner whenever any reference point is lost or destroyed and the Owner shall decide if the reference point shall be replaced by its or the Contractor's forces.

26.02 The Contractor shall establish lines and grades with its own forces in sufficient number and location for the proper execution of the Work.

26.03 If the Contractor, during the construction, damages the established property corners and/or other markers and thereafter requests the Owner to re-stake same in order to complete the project, this expense will be borne solely by the Contractor.

27.00 TERMINATION OF THE CONTRACT, OWNER'S AND CONTRACTORS RIGHT TO STOP WORK.

27.01 If the Contractor should be adjudged bankrupt (voluntarily or involuntarily) or if it should make a general assignment for the benefit of its creditors, or if a receiver should be appointed on account of its insolvency, or if it should persistently or repeatedly refuse or should fail (except in cases for which extension of time is provided) to supply enough properly skilled workmen or proper materials, or if it should fail to make prompt payment to Subcontractors or for material or labor, or persistently disregard laws, ordinances or the instructions of the Owner, or otherwise be guilty of a substantial violation of any provision of the Contract, then the Owner, upon the certificate of the Owner that, in its unilateral

discretion and judgment, believes sufficient cause exists to justify such action, may, without prejudice to any other right or remedy and after giving the Contractor ten (10) calendar days written notice, terminate the employment of the Contractor and take possession of the premises and of all materials, tools and appliances thereon and finish the Work by whatever method the Owner may deem expedient.

27.02 Failure of the Contractor to start the Work within the time limit specified herein or substantial evidence that the progress being made by the Contractor is sufficient to complete the Work within the specified time shall be grounds for termination of the Contract by the Owner.

27.03 Before the Contract is terminated, the Contractor and its surety will first be notified in writing by the Owner of the conditions which make termination of the Contract imminent. When after ten (10) calendar days' notice is given and if satisfactory effort has not been made by the Contractor or its surety to correct the conditions, the Owner may declare, in its exclusive discretion, that the Contract is terminated and so notify the Contractor and its surety accordingly.

27.04 Upon receipt of notice from the Owner that the Contract has been terminated, the Contractor shall immediately discontinue all operations. The Owner may then proceed with the Work in any lawful manner that it may elect until Work is finally completed.

27.05 The exclusive right is reserved to the Owner to take possession of any machinery, implements, tools or materials of any description that shall be found upon the Work, to account for said equipment and materials, and to use same to complete the Project. When the Work is finally completed, the total cost of same will be computed. If the total cost is less than the Contract Price, the difference will not be paid to the Contractor or its surety.

27.06 In case of termination, all expenses incident to ascertaining and collecting losses under the Bond, including legal services, shall be assessed against the Bond.

27.07 If the Work should be stopped under any order of any court or public authority for period of sixty (60) calendar days, through no act or fault of the Contractor or anyone employed by it, or if the Owner shall fail to pay the Contractor within a reasonable time any sum certified by the Owner, then the Contractor may, upon ten (10) calendar days written notice to the Owner, stop Work or terminate this Contract and recover from the Owner payment for all Work properly and professionally executed in a workmanlike manner. This loss specifically includes actual cost of materials and equipment, together with all wages inclusive of all federal, state, and local tax obligations. This loss specifically includes reimbursement of all insurances on a pro-rata basis from the date of termination to date of policy period. This loss excludes and specifically does not include recovery by the Contractor for lost profit, indirect & direct expenses, overhead, and the like.

28.00 PAYMENTS TO THE CONTRACTOR

28.01 Monthly certificates for partial payment, in a form approved by the Owner, shall be transmitted to the Owner upon receipt from the Contractor and acceptance by the Owner. In accordance with LSA-R.S. 38:2248(A), when the Contract Price is less than five hundred thousand dollars, these certificates shall be equal to ninety percent (90%) of both the Work performed and materials stored at the site; and when the Contract Price is five hundred thousand dollars or more, these certificates shall be equal to ninety-five percent (95%) of both the Work performed and materials stored at the site. Partial payment certificates shall include only Work, materials and equipment that are included in official Work Order and which meet the requirements of plans, Specifications and Contract Documents. These monthly estimates shall show the amount of the original estimate for each item, the amount due on each item, the gross total, the retained percentage, the amount previously paid and the net amount of payment due.

28.02 After final completion and acceptance by the Owner of the entire Work, and when the Contract Price is less than five hundred thousand dollars, the Owner shall issue to the Contractor Certificate of Payment in sum sufficient to increase total payments to ninety percent (90%) of the Contract Price. After final completion and acceptance by the Owner of the entire Work, and when the Contract Price is five hundred thousand dollars or more,

the Owner shall issue to the Contractor Certificate of Payment in sum sufficient to increase total payments to ninety-five percent (95%) of the Contract Price.

28.03 When the Contract Price is less than five hundred thousand dollars, the final payment certificate of the remaining ten percent (10%) of the Contract Price, minus any deduction for deficient or Defective Work or other applicable deductions, will be issued by the Owner forty-five (45) days after filing acceptance in the Mortgage Office of the Parish and a Clear Liens and Privilege Certificate has been secured. When the Contract Price is five hundred thousand dollars or more, the final payment certificate of the remaining five percent (5%) of the Contract Price, minus any deduction for deficient or Defective Work or other applicable deductions, will be issued by the Owner forty-five (45) days after filing acceptance in the Mortgage Office of the Parish and a Clear Liens and Privilege Certificate has been secured. Before issuance of the final payment certificate, the Contractor shall deposit with the Owner a certificate from the Clerk of Court and Ex-Officio Recorder of Mortgages from the Parish in which the Work is performed to the effect that no liens have been registered against Contract Work.

28.04 When, in the opinion of the Contractor, the Work provided for and contemplated by the Contract Documents has been substantially completed, the Contractor shall notify the Owner in writing that the Work is substantially complete and request a final inspection. The Owner shall proceed to perform such final inspection accompanied by the Contractor. Any and all Work found by this inspection to be Defective or otherwise not in accordance with the plans and Specifications shall be corrected to the entire satisfaction of the Owner and at the sole expense of the Contractor. If the Contract is found to be incomplete in any of its details, the Contractor shall at once remedy such defects, and payments shall be withheld and formal acceptance delayed until such Work has been satisfactorily completed.

28.05 If payment is requested on the basis of materials and equipment not incorporated in the Work, but delivered and suitably stored and protected from damage and theft at the site, the Request for Payment shall also be accompanied by such data, satisfactory to the Owner, as will establish Owner's title to the material and equipment and protect its interest therein, including applicable insurance.

28.06 Each subsequent Request for Payment shall include an affidavit of Contractor stating that all previous progress payments received on account of the Work have been applied to discharge in full all of Contractor's obligations reflected in prior Request for Payment.

28.07 Each subsequent request for payment shall include an affidavit by Contractor that Contractor, all subcontractors, agents, material suppliers and all other persons supplying material to the project upon which State of Louisiana and/or St. Tammany sales taxes are lawfully due have paid these taxes and that all supplies and materials purchased for this project and for which Contractor has been paid have had all lawfully due State and/or St. Tammany sales taxes paid.

28.08 The Bid Proposal, unless otherwise modified in writing, and the Contract constitute the complete Project. The Contract Prices constitute the total compensation payable to Contractor and the cost of all of the Work and materials, taxes, permits and incidentals must be included into the Bid submitted by the Contractor and included into those items listed on the Proposal.

28.09 Any additional supporting data required by the Owner in order to substantiate Contractor's request for payment shall be furnished by Contractor at no cost to the Owner.

28.10 Owner may withhold from payment to Contractor as may be necessary to protect itself from loss on account of:

(1) Defective and/or inferior work;
(2) Damage to the property of Owner or others caused by Contractor;
(3) Failure by Contractor to make payments properly to sub-contractors or to pay for labor, materials or equipment used on this project;
(4) Failure by Contractor to pay taxes due on materials used on this project;
(5) Damage by Contractor to another Contractor;
(6) Insolvency;
(7) Bankruptcy, voluntary or involuntary;
(8) Revocation of corporate status;

(9) Failure to follow corporate formalities;
(10) Unprofessional activities;
(11) Unworkmanlike performance;
(12) Fraud and/or misrepresentation of any kind.

29.00 ACCEPTANCE AND FINAL PAYMENT(S)

29.01 Upon receipt of written notice from Contractor that the work is substantially complete and usable by Owner or the Pubic in suitable manner, the Owner and the Contractor shall jointly inspect the work.

29.02 If the Owner by inspection determines that the work is not substantially complete in a suitable manner for use by the Owner or the Public, then the Owner shall so notify the Contractor in writing stating such reason. All reasons need not be disclosed unless actually known. The Owner is afforded an opportunity to amend said notices as are reasonably possible.

29.03 If the Owner by its inspection determines that the work is substantially complete, it shall prepare a list of all items not satisfactorily completed and shall notify the Contractor and Owner in writing that the work is substantially complete and subject to satisfactory resolution of those items on the list (punch list). Punch lists may be amended from time to time by Owner in the event that additional deficiencies are discovered. In accordance with LSA-R.S. 38:2248(B), any punch list generated during a construction project shall include the cost estimates for the particular items of work the design professional has developed based on the mobilization, labor, material, and equipment costs of correcting each punch list item. The design professional shall retain his working papers used to determine the punch list items cost estimates should the matter be disputed later. The contract agency shall not withhold from payment more than the value of the punch list. Punch list items completed shall be paid upon the expiration of the forty-five (45) day lien period. The provisions of this Section shall not be subject to waiver.

29.04 Upon determination of substantial completeness with the punch list, the Contract Time is interrupted and the Contractor is given a reasonable time not to exceed thirty (30) consecutive calendar days to effect final completion by correcting or completing all of those items listed on the punch list. If the items on the punch list are not completed in a satisfactory manner within the thirty day period, then the Contract Time will begin to run again and will include for purposes of determining liquidated damages the thirty day period the grace period being withdrawn.

29.05 Upon receipt by Owner of written determination that all work embraced by the contract has been completed in a satisfactory manner, the Owner shall provide a written acceptance to Contractor who shall record Owner's written acceptance with the recorder of Mortgages, St. Tammany Parish. The Contractor shall properly prepare, submit and pay for all costs associated with said Acceptance. The Contractor is also responsible for preparation, re-submission and payment of any and all updated certificates.

29.06 Retainage monies, minus those funds deducted in accordance to the requirements of this agreement including but not limited to Paragraph 28.10, shall be due Contractor not earlier than forty-six (46) calendar days after recordation of certificate of Owner's acceptance provided the following:

(1) Contractor shall prepare, secure, pay for and submit clear lien and privilege certificate, signed and sealed by Clerk of Court or Recorder of Mortgages, Parish of St. Tammany and dated at least forty-six (46) days after recordation of certificate of acceptance;

(2) Ensure that the official representative of the Owner has accepted as per LSA-R.S. 38:2241.1, *et seq*. and that all following sub-sections have been properly satisfied as per law;

(3) Ensure that all signatures are affixed and that there exists the requisite authority for all signatures;

(4) Ensure accurate and proper legal descriptions;

(5) Properly identify all parties and/or signatories;

(6) Properly identify all mailing addresses;

(7) Correctly set for the amount of the contract, together with all change orders;

(8) Set out a brief description of the work performed;

(9) Reference to any previously recorded contract, lien or judgment inscription that may affect the property;

(10) Certification that substantial completion has occurred, together with any applicable date(s);

(11) Certification that no party is in default and/or that the project has been abandoned.

29.07 After securing the clear lien and privilege certificate the Contractor shall prepare its final application for payment and submit to Owner. The Owner shall approve application for payment, or state its objections in writing and forward to Contractor for resolution.

30.00 NOTICE AND SERVICE THEREOF

30.01 Any Notice to Contractor from the Owner relative to any part of this Contract shall be in writing and shall be considered delivered and the service thereof completed when said notice is posted; by certified mail, return receipt requested to the said Contractor at its last given address, or delivered in person to said Contractor or its authorized representative on the Work.

31.00 INTENTION OF THESE GENERAL CONDITIONS

31.01 These General Conditions shall be applicable to all contracts entered into by and between the Owner and Contractors, except as may be altered or amended with the consent of the Owner, and/or provided for in the Special Conditions of each contract. Contractor shall be presumed to have full knowledge of these General Conditions which shall be applicable to all contracts containing these General Conditions, whether Contractor has obtained a copy thereof or not.

32.00 SEVERABILITY

32.01 If any one or more or part of any of the provisions contained herein and/or in the Specifications and Contract for the Work shall for any reason be held invalid, illegal or unenforceable in any respect, such invalidity, illegality or unenforceability shall not affect any other provisions of this Agreement or attachment, but it shall be construed as if such invalid, illegal, or unenforceable provision or part of a provision had never been contained herein.

32.02 CHANGING THESE CONDITIONS: Owner reserves the right to change or modify these General Conditions as it deems best, or as required by law. The General Conditions may also be modified for a particular project by the use of Special Conditions prior to the issuance of the Advertisement for Bid. However, once an advertisement for bid is made for any specific project, any changes to the General Conditions as they affect that specific project must be made in writing and issued via an addendum in accordance with State Law.

33.00 LAW OF THE STATE OF LOUISIANA

33.01 The Contract Documents shall be governed by the Law of the State of Louisiana.

33.02 The Contractor agrees to pay reasonable attorney's fees and other reasonable attendant costs, in the event that it becomes necessary for the Owner to employ an attorney in order to enforce compliance with or any remedy relating to any covenants, obligations, or

conditions imposed upon the Contractor by this Agreement. Attorney fees shall be based upon the prevailing hourly rate of attorney rates in the private sector. In no case shall the hourly rate be less than $175.00 per hour. All attorney fees collected shall be paid the operating budget of the Office of the Parish President.

33.03 The jurisdiction and venue provisions shall apply to all contractors, sureties, and subcontractors. The 22nd Judicial District for the Parish of St. Tammany shall be the court of exclusive jurisdiction and venue for any dispute arising from these General Conditions and/or any contract executed in conjunction with these General Conditions. All parties specifically waive any rights they have or may have for removal of any disputes to Federal Court, or transfers to different State District Court.

33.04 Contractor warrants that it has and/or had received a copy of these General Conditions at all times material hereto; Contractor further agrees that it has read and fully and completely understands each and every condition herein.

33.05 The property description will be more fully set out by an attached exhibit.

33.06 The Contractor warrants that it has the requisite authority to sign and enter this agreement.

33.07 It is specifically understood and agreed that in the event Contractor seeks contribution from the Parish or pursues its legal remedies for any alleged breach of this agreement by the Parish, then the following list of damages SHALL NOT BE RECOVERABLE BY CONTRACTOR. This list includes, but is not limited to:

1. indirect costs and/or expenses;
2. direct costs and/or expenses;
3. time-related costs and/or expenses;
4. award of extra days;
5. costs of salaries or other compensation of Contractor's personnel at Contractor's principal office and branch offices;
6. expenses of Contractor's principal, branch and/or field offices;
7. any part of Contractor's capital expenses, including any interest on Contractor's capital employed for the work;
8. any other charges related to change orders;
9. overhead and general expenses of any kind or the cost of any item not specifically and expressly included in Cost of Work.

33.08 DEFAULT AND WAIVERS

It is understood that time is of the essence. It is specifically understood between the parties that Contractor waives any and all notice to be placed in default by the Owner. This subsection shall supersede and prime any other subsection herein above that is in conflict. The Owner specifically reserves its right and specifically does not waive the requirement to be placed in default by the Contractor as per law.

33.09 St. Tammany Parish Government contracts to be awarded are dependent on the available funding and/or approval by members designated and/or acknowledged by St. Tammany Parish Government. At any time St. Tammany Parish Government reserves the right to cancel the award of a contract if either or both of these factors is deficient.

33.10 It is the Parish's policy to provide a method to protest exclusion from a competition or from the award of a contract, or to challenge an alleged solicitation irregularity. It is always better to seek a resolution within the Parish system before resorting to outside agencies and/or litigation to resolve differences. All protests must be made in writing, and shall be concise and logically presented to facilitate review by the Parish. The written protest shall include:

1. The protester's name, address, and fax and telephone numbers and the solicitation, bid, or contract number;

2. A detailed statement of its legal and factual grounds, including a description of the resulting prejudice to the protester;

3. Copies of relevant documents;

4. All information establishing that the protester is an interested party and that the protest is timely; and

5. A request for a ruling by the agency; and a statement of the form of relief requested.

The protest shall be addressed to Director of Procurement, St. Tammany Parish Government, P.O. Box 628, Covington, LA 70434.

The protest review shall be conducted by the Parish Procurement Department.

Only protests from interested parties will be allowed. Protests based on alleged solicitation improprieties that are apparent before bid opening, or the time set for receipt of initial proposals must be filed with and received by the Procurement Department BEFORE those deadlines.

Any other protest shall be filed no later than ten (10) calendar days after the basis of the protest is known, or should have been known (whichever is earlier).

The Parish will use its best efforts to resolve the protest within thirty (30) days of the date that it is received by the Parish. The written response will be sent to the protestor via mail and, fax, if a fax number has been provided by the protestor. The protester can request additional methods of notification.

Last day to submit questions and/or verification on comparable products will be no later than 2:00 pm CST, seven (7) working days prior to the opening date of the bid/proposal due date. Further any questions or inquires must be submitted via fax to 985-898-5227, or via email to Procurement@stpgov.org. Any questions or inquires received after the required deadline to submit questions or inquires will not be answered.

Section 09

CORPORATE RESOLUTION

EXCERPT FROM MINUTES OF MEETING OF THE BOARD OF DIRECTORS OF INCORPORATED.
AT THE MEETING OF DIRECTORS OF _____ INCORPORATED, DULY NOTICED AND HELD ON _____, A QUORUM BEING THERE PRESENT, ON MOTION DULY MADE AND SECONDED. IT WAS:
RESOLVED THAT _____, BE AND IS HEREBY APPOINTED, CONSTITUTED AND DESIGN ATED AS AGENT AND ATTORNEY-IN-FACT OF THE CORPORATION WITH FU LL POWER AND AUTHORITY TO ACT ON BEHALF OF THIS CORPORATION IN ALL NEGOTIATIONS, BIDDING, CONCERNS AND TRANSACTIONS WITH THE PARISH OF ST. TAMMANY OR ANY OF ITS AGENCIES, DEPARTMENTS, EMPLOYEES OR AGENTS, INCLUDING BUT NOT LIMITED TO, THE EXECUTION OF ALL BIDS, PAPERS, DOCUMENTS, AFFIDAVITS, BONDS, SURETIES, CONTRACTS AND ACTS AND TO RECEIVE ALL PURCHASE ORDERS AND NOTICES ISSUED PURSUANT TO THE PROVISIONS OF ANY SUCH BID OR CONTRACT, THIS CORPORATION HEREBY RATIFYING, APPROVING, CONFIRMING, AND ACCEPTINGEACH AND EVERY SUCH ACT PERFORMED BY SAID AGENT AND ATTORNEY-IN-FACT.

I HEREBY CERTIFY THE FOREGOING TO BE A TRUE AND CORRECT COPY OF AN EXCERPT OF THE MINUTES OF THE ABOVE DATED MEETING OF THE BOARD OF DIRECTORS OF SAID CORPORATION, AND THE SAME HAS NOT BEEN REVOKED OR RESCINDED.

SECRETARY-TREASURER

_____

DATE

_____

Sample

Section 10

Certificate of Insurance Instructions

The below information is intended to guide Contractors on what information is needed to be listed on the Certificate of Insurance. All Insurance limit requirements can be found in Attachment D.

- **Certificate Holder** – STPG must be listed as the certificate holder, and it must include our address of: P.O. Box 628, Covington, LA 70434
    - Reason: the certificate holder is where cancellations of coverage, or updated certificates are mailed. If a vendor terminates a policy, we will be notified.
- **Additional Insured** – We must be named as an additional insured so that if there is a lawsuit against the vendor for a project, their coverage will cover STPG as well if we are named in the lawsuit.
    - We must be named in the Description of Operations box – reason: there could be other additional insureds, and we want to have no doubt that we are one of the additional insureds.
    - We must be named as additional insured on the following coverages: General liability, Auto Liability, Umbrella/Excess Liability, Environmental/Pollution Liability.
    - Professional Liability policies do not allow for an additional insured by most carriers.
- **Project Name & Contract #** - We need this listed in the Description of Operations, again so that if there is a lawsuit, we have proof that coverage was active for that project.
- **Waiver of Subrogation –** This can either be listed in the Description of Operations or checked off in the appropriate columns.

    From the Insurance Requirement form:

    Waiver of Subrogation: The Provider's insurers will have no right of recovery or subrogation against the Parish of St. Tammany, it being the intention of the parties that all insurance policy(ies) so affected shall protect both parties and be the primary coverage for any and all losses covered by the below described insurance.
- **Owners Protective Liability (OPL) or (OCP)** – Certificate of Insurance for OCP names St. Tammany Parish Government as the Insured and the Certificate Holder.

- Sample of Certificate of Insurance (COI) can be found on page 2.

- Please refer to this section in the package labeled "Insurance Requirements" for limits required for this project

Any questions regarding insurance requirements please contact the Risk Department at 985-898-5226 or email riskman@stpgov.org

CERTIFICATE OF LIABILITY INSURANCE

DATE (MM/DD/YYYY)

THIS CERTIFICATE IS ISSUED AS A MATTER OF INFORMATION ONLY AND CONFERS NO RIGHTS UPON THE CERTIFICATE HOLDER. THIS CERTIFICATE DOES NOT AFFIRMATIVELY OR NEGATIVELY AMEND, EXTEND OR ALTER THE COVERAGE AFFORDED BY THE POLICIES BELOW. THIS CERTIFICATE OF INSURANCE DOES NOT CONSTITUTE A CONTRACT BETWEEN THE ISSUING INSURER(S), AUTHORIZED REPRESENTATIVE OR PRODUCER, AND THE CERTIFICATE HOLDER.

IMPORTANT: If the certificate holder is an ADDITIONAL INSURED, the policy(ies) must be endorsed. If SUBROGATION IS WAIVED, subject to the terms and conditions of the policy, certain policies may require an endorsement. A statement on this certificate does not confer rights to the certificate holder in lieu of such endorsement(s).

PRODUCER	CONTACT NAME:	
	PHONE (A/C, No, Ext):	FAX (A/C, No):
	E-MAIL ADDRESS:	
	INSURER(S) AFFORDING COVERAGE	NAIC #
INSURED	INSURER A :	
	INSURER B :	
	INSURER C :	
	INSURER D :	
	INSURER E :	
	INSURER F :	

COVERAGES **CERTIFICATE NUMBER:** **REVISION NUMBER:**

THIS IS TO CERTIFY THAT THE POLICIES OF INSURANCE LISTED BELOW HAVE BEEN ISSUED TO THE INSURED NAMED ABOVE FOR THE POLICY PERIOD INDICATED. NOTWITHSTANDING ANY REQUIREMENT, TERM OR CONDITION OF ANY CONTRACT OR OTHER DOCUMENT WITH RESPECT TO WHICH THIS CERTIFICATE MAY BE ISSUED OR MAY PERTAIN, THE INSURANCE AFFORDED BY THE POLICIES DESCRIBED HEREIN IS SUBJECT TO ALL THE TERMS, EXCLUSIONS AND CONDITIONS OF SUCH POLICIES. LIMITS SHOWN MAY HAVE BEEN REDUCED BY PAID CLAIMS.

INSR LTR	TYPE OF INSURANCE	ADDL INSR	SUBR WVD	POLICY NUMBER	POLICY EFF (MM/DD/YYYY)	POLICY EXP (MM/DD/YYYY)	LIMITS	
	GENERAL LIABILITY						EACH OCCURRENCE	$
	☐ COMMERCIAL GENERAL LIABILITY						DAMAGE TO RENTED PREMISES (Ea occurrence)	$
	☐ CLAIMS-MADE ☐ OCCUR						MED EXP (Any one person)	$
							PERSONAL & ADV INJURY	$
							GENERAL AGGREGATE	$
	GEN'L AGGREGATE LIMIT APPLIES PER:						PRODUCTS - COMP/OP AGG	$
	☐ POLICY ☐ PRO-JECT ☐ LOC							$
	AUTOMOBILE LIABILITY						COMBINED SINGLE LIMIT (Ea accident)	$
	☐ ANY AUTO						BODILY INJURY (Per person)	$
	☐ ALL OWNED AUTOS ☐ SCHEDULED AUTOS						BODILY INJURY (Per accident)	$
	☐ HIRED AUTOS ☐ NON-OWNED AUTOS						PROPERTY DAMAGE (Per accident)	$
								$
	☐ **UMBRELLA LIAB** ☐ OCCUR						EACH OCCURRENCE	$
	☐ **EXCESS LIAB** ☐ CLAIMS-MADE						AGGREGATE	$
	☐ DED ☐ RETENTION $							$
	WORKERS COMPENSATION AND EMPLOYERS' LIABILITY Y / N						☐ WC STATU-TORY LIMITS ☐ OTH-ER	
	ANY PROPRIETOR/PARTNER/EXECUTIVE OFFICER/MEMBER EXCLUDED? ☐ N / A **(Mandatory in NH)**						E.L. EACH ACCIDENT	$
	If yes, describe under DESCRIPTION OF OPERATIONS below						E.L. DISEASE - EA EMPLOYEE	$
							E.L. DISEASE - POLICY LIMIT	$

DESCRIPTION OF OPERATIONS / LOCATIONS / VEHICLES (Attach ACORD 101, Additional Remarks Schedule, if more space is required)

Project Name:
Contract #:

(Name St. Tammany Parish Government as an additional insured).

CERTIFICATE HOLDER

St. Tammany Parish Government
P.O. Box 628
Covington, LA 70434

CANCELLATION

SHOULD ANY OF THE ABOVE DESCRIBED POLICIES BE CANCELLED BEFORE THE EXPIRATION DATE THEREOF, NOTICE WILL BE DELIVERED IN ACCORDANCE WITH THE POLICY PROVISIONS.

AUTHORIZED REPRESENTATIVE

Sample

© 1988-2010 ACORD CORPORATION. All rights reserved.
The ACORD name and logo are registered marks of ACORD

Section 11

Bond No.:_____

CONTRACT AGREEMENT

BETWEEN PARISH AND CONTRACTOR

BY: ST. TAMMANY PARISH GOVERNMENT	**UNITED STATES OF AMERICA**
WITH:	**STATE OF LOUISIANA**
	ST. TAMMANY PARISH

This agreement is entered into this_____day of_____, 20___, by and between: «txtREQCompanyName», hereinafter called the "Contractor", whose business address is «txtREQAddress», «txtREQCity», «txtREQState» «txtREQZip» and the St. Tammany Parish Government, hereinafter called the "Parish", whose business address is P.O. Box 628, Covington, LA 70434 (collectively, the “Parties”) for «txtPROJECTNAME» project. Witnessed that the Contractor and the Parish, in consideration of premises and the mutual covenants, consideration and agreement herein contained, agree as follows:

1. SCOPE OF SERVICES

The Contractor shall furnish all labor and materials and perform all of the work required to build, construct and/or complete in a thorough and workmanlike manner:

«txtScopeSummary»

2. CONSTRUCTION DOCUMENTS

It is recognized by the Parties herein that said Construction Documents, including by way of example and not of limitation, the plans and Specifications, General Conditions, Supplementary General Conditions, any addenda thereto, the drawings (if any), and the bid, quote or other procurement documents impose duties and obligations upon the Parties herein, and said Parties thereby agree that they shall be bound by said duties and obligations. For these purposes, all of the provisions contained in the aforementioned Construction Documents are incorporated herein by reference with the same force and effect as though said Construction Documents were herein set out in full. Copies of the aforementioned Construction Documents are in the possession of both the Contractor and the Parish for reference.

3. TIME FOR COMPLETION

The work shall be commenced on a date to be specified in a written order of the Parish and shall be completed within «intCompletionTime» calendar days from and after said date.

4. COMPENSATION TO BE PAID TO THE CONTRACTOR

The Parish will pay and the Contractor will accept in full consideration for the performance of the Contract the sum of «curREQGrandTotal» dollars.

5. PERFORMANCE AND PAYMENT BOND

To these presents personally came and intervened _____,
(Name of Attorney in Fact)
herein acting for _____, a corporation organized
(Surety)
and existing under the laws of the State of _____, and duly authorized to transact business in the State of Louisiana, as surety, who declared that having taken cognizance of this Contract and of the Construction Documents mentioned herein, he hereby in his capacity as its Attorney in Fact obligates his company, as surety for the said Contractor, unto the said Parish, up to the sum of «curREQGrandTotal». The condition of this performance and payment bond

shall be that should the Contractor herein not perform the Contract in accordance with the terms and conditions hereof, or should said Contractor not fully indemnify and save harmless the Parish from all costs and damages which he may suffer by said Contractor's non-performance or should said Contractor not pay all persons who have fulfilled obligations to perform labor and/or furnish materials in the prosecution of the work provided for herein, including by way of example, workmen, laborers, mechanics, and furnishers of materials, machinery, equipment and fixtures, then said surety agrees and is bound to so perform the Contract and make said payment(s).

Contractor and Parish specifically agree to and recognize (1) the statutory employer relationship existing between the Parish and any employees performing work under this Contract as employees of the Contractor or employees of the "Sub-Contractor", and (2) that the work performed by the employees of the Contractor and the employees of the "Sub-Contractor" is part of the Parish's business, occupation or trade and is essential to the ability of the Parish to generate their products or services, all of which is in accordance with LSA-R.S. 23:1061, and as may be amended.

6. LIABILITY AND INDEMNIFICATION

A. Duty to Defend

Upon notice of any claim, demand, suit, or cause of action against the Parish, alleged to arise out of or be related to this Contract, Contractor shall investigate, handle, respond to, provide defense for, and defend at its sole expense, even if the claim, demand, suit, or cause of action is groundless, false, or fraudulent. The Parish may, but is not required to, consult with or assist the Contractor, but this assistance shall not affect the Contractor's obligations, duties, and responsibilities under this section. Contractor shall obtain the Parish's written consent before entering into any settlement or dismissal.

B. Contractor Liability

Contractor shall be liable without limitation to the Parish for any and all injury, death, damage, loss, destruction, damages, costs, fines, penalties, judgments, forfeitures, assessments, expenses (including attorney fees), obligations, and other liabilities of every name and description, which may occur or in any way arise out of any act or omission of Contractor, its owners, agents, employees, partners or subcontractors.

C. Force Majeure

It is understood and agreed that neither party can foresee the exigencies beyond the control of each party which arise by reason of an Act of God or force majeure; therefore, neither party shall be liable for any delay or failure in performance beyond its control resulting from an Act of God or force majeure. The Parish shall determine whether a delay or failure results from an Act of God or force majeure based on its review of all facts and circumstances. The parties shall use reasonable efforts, including but not limited to, use of continuation of operations plans (COOP), business continuity plans, and disaster recovery plans, to eliminate or minimize the effect of such events upon the performance of their respective duties under this Contract.

D. Indemnification

Contractor shall fully indemnify and hold harmless the Parish, without limitation, for any and all injury, death, damage, loss, destruction, damages, costs, fines, penalties, judgments, forfeitures, assessments, expenses (including attorney fees), obligations, and other liabilities of every name and description, which may occur or in any way arise out of any act or omission of Contractor, its owners, agents,

employees, partners or subcontractors. The Contractor shall not indemnify for the portion of any loss or damage arising from the Parish's act or failure to act.

E. Intellectual Property Indemnification

Contractor shall fully indemnify and hold harmless the Parish, without limitation, from and against damages, costs, fines, penalties, judgments, forfeitures, assessments, expenses (including attorney fees), obligations, and other liabilities in any action for infringement of any intellectual property right, including but not limited to, trademark, trade-secret, copyright, and patent rights.

When a dispute or claim arises relative to a real or anticipated infringement, the Contractor, at its sole expense, shall submit information and documentation, including formal patent attorney opinions, as required by the Parish.

If the use of the product, material, service, or any component thereof is enjoined for any reason or if the Contractor believes that it may be enjoined, Contractor, while ensuring appropriate migration and implementation, data integrity, and minimal delays of performance, shall at its sole expense and in the following

order of precedence: (i) obtain for the Parish the right to continue using such product, material, service, or component thereof; (ii) modify the product, material, service, or component thereof so that it becomes a non-infringing product, material, or service of at least equal quality and performance; (iii) replace the product, material, service, or component thereof so that it becomes a non-infringing product, material, or service of at least equal quality and performance; or, (iv) provide the Parish monetary compensation for all payments made under the Contract related to the infringing product, material, service, or component, plus for all costs incurred to procure and implement a non-infringing product, material, or service of at least equal quality and performance. Until this obligation has been satisfied, the Contractor remains in default.

The Contractor shall not be obligated to indemnify that portion of a claim or dispute based upon the Parish's unauthorized: i) modification or alteration of the product, material or service; ii) use of the product, material or service in combination with other products not furnished by Contractor; or, iii) use of the product, material or service in other than the specified operating conditions and environment.

7. MODIFICATION OF CONTRACT TERMS

Provided that any alterations which may be made in the terms of the Contract or in the work to be done under it, or the giving by the Parish of any extensions of time for the performance of the Contract, or any other forbearance on the part of either the Parish or the Contractor to the other shall not in any way release the Contractor or the Surety from their liability hereunder, notice to the Surety of any such alterations, extensions or other forbearance being hereby waived.

8. TERMINATION, CANCELLATION, AND SUSPENSION

A. Termination

The term of this Contract shall be binding upon the Parties hereto until the work has been completed by the Contractor and accepted by the Parish, and all payments required to be made to the Contractor have been made. But, this Contract may be terminated upon thirty (30) days written notice under any or all of the following conditions:

1) By mutual agreement and consent of the Parties hereto;

2) By the Parish as a consequence of the failure of the Contractor to comply with the terms, progress, or quality of the work in a satisfactory manner, proper allowances being made for circumstances beyond the control of the Contractor;

3) By either party upon failure of the other party to fulfill its obligations as set forth in this Contract;

4) By the Parish with less than thirty (30) days' notice due to budgetary reductions and changes in funding priorities by the Parish;

5) In the event of the abandonment of the project by the Parish.

Upon termination, the Contractor shall be paid for actual work performed prior to the Notice of Termination, either based upon the established hourly rate for services actually performed, or on a pro-rata share of the basic fee based upon the phase or percentage of work actually completed, depending on the type of compensation previously established under this Contract.

Upon Termination, the Contractor shall deliver to the Parish all original documents, notes, drawings, tracings, computer files, and other files pertaining to this Contract or the Work performed, except for the Contractor's personal and administrative files.

B. Cancellation

The continuation of this Contract is contingent upon the appropriation of funds to fulfill the requirements of the Contract by the Parish. If the Parish fails to appropriate sufficient monies to provide for the continuation of this or any other Contract, or if such appropriation is reduced by the veto of Parish President by any means provided in the appropriations Ordinance to prevent the total appropriation for the year from exceeding revenues for that year, or for any other lawful purpose, and the effect of such reduction is to provide insufficient monies for the continuation of the Contract, the Contract shall terminate on the date of the beginning of the first fiscal year for which funds are not appropriated. It is understood and agreed that paragraph (9)(C) below may preempt this paragraph, all at the exclusive and unilateral option of the Parish.

C. Suspension

Should the Parish desire to suspend the work, but not definitely terminate the Contract, the Parish shall supply the Contractor with thirty (30) days' notice. The Parish will also supply Contractor thirty (30) days' notice that the work is to be reinstated and resumed in full force. Contractor shall receive no additional compensation during the suspension period. The Parties may revisit the terms of this Contract during the suspension period.

The suspension shall not exceed six (6) months, unless mutually agreed upon between the Parties.

D. Failure to complete or deliver within the time specified or to provide the services as specified in the bid or response will constitute a default and may cause cancellation of the contract. Where the Parish has determined the contractor to be in default. The Parish reserves the right to purchase any or all products or services covered by the contract on the open market and to charge the contractor with the cost in excess of the contract price. Until such assessed charges have been paid, no subsequent bid or response from the defaulting contractor will be considered.

E. In the event of a default and/or breach of this agreement and this matter is forwarded to legal counsel, then the prevailing party may be entitled to collect a reasonable attorney fees and all costs associated therewith whether or not litigation is initiated. Attorney fees shall be based upon the current, reasonable prevailing rate for counsel in the private sector. The Parties agree to be responsible for such attorney fees, together for all with legal interest from date of agreement breach, plus all costs of collection.

F. Termination or cancellation of this agreement will not affect any rights or duties arising under any term or condition herein.

G. As to the filing of voluntary or involuntary bankruptcy by Contractor, Contractor agrees that if any execution or legal process is levied upon its interest in this Contract, or if any liens or privileges are filed against its interest, or if a petition in bankruptcy is filed against it, or if it is adjudicated bankrupt in involuntary proceedings, or if it should breach this Contract in any material respect, the Parish shall have the right, at its unilateral option, to immediately cancel and terminate this Contract. In the event that Contractor is placed in any chapter of bankruptcy, voluntarily or involuntarily, or otherwise triggers any provision of the preceding sentence herein, it is understood and agreed that all materials, goods and/or services provided shall be and remain the property of the Parish. All rights of Contractor as to goods, wares, products, services, materials and the like supplied to Parish shall be deemed forfeited.

9. RECORDATION OF CONTRACT

Contractor authorizes Parish to deduct from any payment due herein costs and service fees for recordation of this Contract in full or an excerpt hereof, or any revisions or modifications thereof as required by law.

10. AUTHORITY TO ENTER CONTRACT

The undersigned representative of Contractor warrants and personally guarantees that he/she has the requisite and necessary authority to enter and sign this Contract on behalf of the corporate entity, partnership, etc. The undersigned Parties warrant and represent that they each have the respective authority and permission to enter this Contract. In the event that Contractor is a member of a corporation, partnership, L.L.C., L.L.P., or any other juridical entity, the Parish requires, as an additional provision, that Contractor supply a certified copy of a corporate resolution authorizing the undersigned to enter and sign this Contract. Another option to fulfill this additional provision he/she can supply Louisiana Secretary of State Business filings confirming that he/she is a managing member of a corporation, partnership, L.L.C., L.L.P., or any other juridical entity which authorizes the undersigned to enter and sign this Contract.

In Witness thereof, the Parties hereto on the day and year first above written have executed this Contract in **One (1)** counterpart, each of which shall, without proof or accountancy for the other counterparts, be deemed an original thereof.

WITNESSES:	**CONTRACTOR:**
_____	_____
Signature	**Signature**
_____	_____
Print Name	**Print Name**
_____	_____
Signature	**Title**
_____	_____
Print Name	**Date**

Bond No.:_____

WITNESSES:

_____
Signature

_____
Print Name

_____
Signature

_____
Print Name

ST. TAMMANY PARISH GOVERNMENT:

_____

Michael B. Cooper
Parish President

_____
Date

APPROVED BY:

_____

Assistant District Attorney
Civil Division

_____
Date

_____
(Surety)

_____
Signature

_____
Print Name

Department of the Treasury (DOT) & American Rescue Plan Act (ARPA)
Federal Contract Clauses
WATER SECTOR PROGRAM
31 CFR Part 35 Subpart A

1. EQUAL EMPLOYMENT OPPORTUNITY

During the performance of this contract, the contractor agrees as follows:
(1) The contractor will not discriminate against any employee or applicant for employment because of race, color, religion, sex, sexual orientation, gender identity, or national origin. The contractor will take affirmative action to ensure that applicants are employed, and that employees are treated during employment without regard to their race, color, religion, sex, sexual orientation, gender identity, or national origin. Such action shall include, but not be limited to the following:
Employment, upgrading, demotion, or transfer; recruitment or recruitment advertising; layoff or termination; rates of pay or other forms of compensation; and selection for training, including apprenticeship. The contractor agrees to post in conspicuous places, available to employees and applicants for employment, notices to be provided setting forth the provisions of this nondiscrimination clause.
(2) The contractor will, in all solicitations or advertisements for employees placed by or on behalf of the contractor, state that all qualified applicants will receive consideration for employment without regard to race, color, religion, sex, sexual orientation, gender identity, or national origin.
(3) The contractor will not discharge or in any other manner discriminate against any employee or applicant for employment because such employee or applicant has inquired about, discussed, or disclosed the compensation of the employee or applicant or another employee or applicant. This provision shall not apply to instances in which an employee who has access to the compensation information of other employees or applicants as a part of such employee's essential job functions discloses the compensation of such other employees or applicants to individuals who do not otherwise have access to such information, unless such disclosure is in response to a formal complaint or charge, in furtherance of an investigation, proceeding, hearing, or action, including an investigation conducted by the employer, or is consistent with the contractor's legal duty to furnish information.
(4) The contractor will send to each labor union or representative of workers with which he has a collective bargaining agreement or other contract or understanding, a notice to be provided advising the said labor union or workers' representatives of the contractor's commitments under this section, and shall post copies of the notice in conspicuous places available to employees and applicants for employment.
(5) The contractor will comply with all provisions of Executive Order 11246 of September 24, 1965, and of the rules, regulations, and relevant orders of the Secretary of Labor.
(6) The contractor will furnish all information and reports required by Executive Order 11246 of September 24, 1965, and by rules, regulations, and orders of the Secretary of Labor, or pursuant thereto, and will permit access to his books, records, and accounts by the administering agency and the Secretary of Labor for purposes of investigation to ascertain compliance with such rules, regulations, and orders.
(7) In the event of the contractor's noncompliance with the nondiscrimination clauses of this contract or with any of the said rules, regulations, or orders, this contract may be canceled, terminated, or suspended in whole or in part and the contractor may be declared ineligible for further Government contracts or federally assisted construction contracts in accordance with procedures authorized in Executive Order 11246 of September 24, 1965, and such other sanctions may be imposed and remedies invoked as provided in Executive Order 11246 of September 24, 1965, or by rule, regulation, or order of the Secretary of Labor, or as otherwise provided by law.
(8) The contractor will include the portion of the sentence immediately preceding paragraph (1) and the provisions of paragraphs (1) through (8) in every subcontract or purchase order unless exempted by rules, regulations, or orders of the Secretary of Labor issued pursuant to section 204 of Executive Order 11246 of September 24, 1965, so that such provisions will be binding upon each subcontractor or vendor. The contractor will take such action with respect to any subcontract or purchase order as the administering agency may direct as a means of enforcing such provisions, including sanctions for noncompliance:

Provided, however, that in the event a contractor becomes involved in, or is threatened with, litigation with a subcontractor or vendor as a result of such direction by the administering agency, the contractor may request the United States to enter into such litigation to protect the interests of the United States.
The applicant further agrees that it will be bound by the above equal opportunity clause with respect to its own employment practices when it participates in federally assisted construction work: *Provided,* That if the applicant so participating is a State or local government, the above equal opportunity clause is not applicable to any agency, instrumentality or subdivision of such government which does not participate in work on or under the contract.
The applicant agrees that it will assist and cooperate actively with the administering agency and the Secretary of Labor in obtaining the compliance of contractors and subcontractors with the equal opportunity clause and the rules, regulations, and relevant orders of the Secretary of Labor, that it will furnish the administering agency and the Secretary of Labor such information as they may require for the supervision of such compliance, and that it will otherwise assist the administering agency in the discharge of the agency's primary responsibility for securing compliance.
The applicant further agrees that it will refrain from entering into any contract or contract modification subject to Executive Order 11246 of September 24, 1965, with a contractor debarred from, or who has not demonstrated eligibility for, Government contracts and federally assisted construction contracts pursuant to the Executive Order and will carry out such sanctions and penalties for violation of the equal opportunity clause as may be imposed upon
contractors and subcontractors by the administering agency or the Secretary of Labor pursuant to Part II, Subpart D of the Executive Order. In addition, the applicant agrees that if it fails or refuses to comply with these undertakings, the administering agency may take any or all of the following actions: Cancel, terminate, or suspend in whole or in part this grant (contract, loan, insurance, guarantee); refrain from extending any further assistance to the applicant under the program with respect to which the failure or refund occurred until satisfactory assurance of future compliance has been received from such applicant; and refer the case to the Department of Justice for appropriate legal proceedings.

2. DAVIS-BACON ACT, as amended (40 U.S.C. 3141-3148). When required by Federal program legislation, all prime construction contracts in excess of $2,000 awarded by non-Federal entities must include a provision for compliance with the Davis-Bacon Act (40 U.S.C. 3141-3144, and 3146-3148) as supplemented by Department of Labor regulations (29 CFR Part 5, “Labor Standards Provisions Applicable to Contracts Covering Federally Financed and Assisted Construction”). In accordance with the statute, contractors must be required to pay wages to laborers and mechanics at a rate not less than the prevailing wages specified in a wage determination made by the Secretary of Labor. In addition, contractors must be required to pay wages not less than once a week. The non-Federal entity must place a copy of the current prevailing wage determination issued by the Department of Labor in each solicitation. The decision to award a contract or subcontract must be conditioned upon the acceptance of the wage determination. The non-Federal entity must report all suspected or reported violations to the Federal awarding agency. The contracts must also include a provision for compliance with the Copeland “Anti-Kickback” Act (40 U.S.C. 3145), as supplemented by Department of Labor regulations (29 CFR Part 3, “Contractors and Subcontractors on Public Building or Public Work Financed in Whole or in Part by Loans or Grants from the United States”). The Act provides that each contractor or subrecipient must be prohibited from inducing, by any means, any person employed in the construction, completion, or repair of public work, to give up any part of the compensation to which he or she is otherwise entitled. The non-Federal entity must report all suspected or reported violations to the Federal awarding agency.

3. COMPLIANCE WITH THE CONTRACT WORK HOURS AND SAFETY STANDARDS ACT.
(1) *Overtime requirements*. No contractor or subcontractor contracting for any part of the contract work which may require or involve the employment of laborers or mechanics shall require or permit any such laborer or mechanic in any workweek in which he or she is employed on such work to work in excess of forty hours in such workweek unless such laborer or mechanic receives compensation at a rate not less

than one and one-half times the basic rate of pay for all hours worked in excess of forty hours in such workweek.
(2) *Violation; liability for unpaid wages; liquidated damages*. In the event of any violation of the clause set forth in paragraph (b)(1) of this section the contractor and any subcontractor responsible therefor shall be liable for the unpaid wages. In addition, such contractor and subcontractor shall be liable to the United States (in the case of work done under contract for the District of Columbia or a territory, to such District or to such territory), for liquidated damages. Such liquidated damages shall be computed with respect to each individual laborer or mechanic, including watchmen and guards, employed in violation of the clause set forth in paragraph (b)(1) of this section, in the sum of $27 for each calendar day on which such individual was required or permitted to work in excess of the standard workweek of forty hours without payment of the overtime wages required by the clause set forth in paragraph (b)(1) of this section.
(3) *Withholding for unpaid wages and liquidated damages*. The Parish shall upon its own action or upon written request of an authorized representative of the Department of Labor or U.S. Treasury withhold or cause to be withheld, from any moneys payable on account of work performed by the contractor or subcontractor under any such contract or any other Federal contract with the same prime contractor, or any other federally-assisted contract subject to the Contract Work Hours and Safety Standards Act, which is held by the same prime contractor, such sums as may be determined to be necessary to satisfy any liabilities of such contractor or subcontractor for unpaid wages and liquidated damages as provided in the clause set forth in paragraph (b)(2) of this section.
(4) *Subcontracts*. The contractor or subcontractor shall insert in any subcontracts the clauses set forth in paragraph (b)(1) through (4) of this section and also a clause requiring the subcontractors to include these clauses in any lower tier subcontracts. The prime contractor shall be responsible for compliance by any subcontractor or lower tier subcontractor with the clauses set forth in paragraphs (b)(1) through (4) of this section.

4. RIGHTS TO INVENTIONS MADE UNDER A CONTRACT OR AGREEMENT
If the Federal award meets the definition of "funding agreement" under 37 CFR § 401.2 (a) and the recipient or subrecipient wishes to enter into a contract with a small business firm or nonprofit organization regarding the substitution of parties, assignment or performance of experimental, developmental, or research work under that "funding agreement," the recipient or subrecipient must comply with the requirements of 37 CFR Part 401, "Rights to Inventions Made by Nonprofit Organizations and Small Business Firms Under Government Grants, Contracts and Cooperative Agreements," and any implementing regulations issued by the awarding agency.

5. CLEAN AIR ACT
(1) The Contractor agrees to comply with all applicable standards, orders or regulations issued pursuant to the Clean Air Act, as amended, 42 U.S.C.§ 7401 *et seq*.
(2) The Contractor agrees to report each violation to the Parish and understands and agrees that the Parish will, in turn, report each violation as required to assure notification to the federal awarding agency, and the appropriate Environmental Protection Agency Regional Office.
(3) The Contractor agrees to include these requirements in each subcontract exceeding $150,000 financed in whole or in part with Federal assistance provided by ARPA.

6. FEDERAL WATER POLLUTION CONTROL ACT
(1) The Contractor agrees to comply with all applicable standards, orders or regulations issued pursuant to the Federal Water Pollution Control Act, as amended, 33 U.S.C. § 7401 *et seq.*
(2) The Contractor agrees to report each violation to the Parish and understands and agrees that the Parish will, in turn, report each violation as required to assure notification to the Federal awarding agency, and the appropriate Environmental Protection Agency Regional Office.
(3) The Contractor agrees to include these requirements in each subcontract exceeding $150,000 financed in whole or in part with Federal assistance provided by ARPA.

7. SUSPENSION AND DEBARMENT

(1) This contract is a covered transaction for purposes of 2 C.F.R. pt. 180 and 2 C.F.R. pt. 3000. As such, the contractor is required to verify that none of the contractor's principals (defined at 2 C.F.R. § 180.995) or its affiliates (defined at 2 C.F.R. § 180.905) are excluded (defined at 2 C.F.R. § 180.940) or disqualified (defined at 2 C.F.R. § 180.935).

(2) The contractor must comply with 2 C.F.R. pt. 180, subpart C and2 C.F.R. pt. 3000, subpart C, and must include a requirement to comply with these regulations in any lower tier covered transaction it enters into.

(3) This certification is a material representation of fact relied upon by the Parish. If it is later determined that the contractor did not comply with 2 C.F.R. pt. 180, subpart C and 2 C.F.R. pt. 3000, subpart C, in addition to remedies available to the Parish, the Federal Government may pursue available remedies, including but not limited to suspension and/or debarment.

(4) The bidder or proposer agrees to comply with the requirements of2 C.F.R. pt. 180, subpart C and 2 C.F.R. pt. 3000, subpart C while this offer is valid and throughout the period of any contract that may arise from this offer. The bidder or proposer further agrees to include a provision requiring such compliance in its lower tier covered transactions.

8. BYRD ANTI-LOBBYING ACT

The Contractor will be expected to comply with Federal statutes required in the Anti-Lobbying Act. Contractors who apply or bid for an award of more than $100,000 shall file the required certification. Each tier certifies to the tier above that it will not and has not used federally appropriated funds to pay any person or organization for influencing or attempting to influence an officer or employee of any agency, a member of Congress, officer or employee of Congress, or an employee of a member of Congress in connection with obtaining any Federal contract, grant, or any other award covered by 31 U.S.C. § 1352. Each tier shall also disclose any lobbying with non-Federal funds that takes place in connection with obtaining any federal award. Such disclosures are forwarded from tier to tier up to the recipient who in turn will forward the certification(s) to the federal awarding agency.

9. PROCUREMENT OF RECOVERED MATERIALS

In the performance of this Contract, the Contractor shall make maximum use of products containing recovered materials that are EPA-designated items unless the product cannot be acquired—

i. Competitively within a timeframe providing for compliance with the Contract performance schedule;

ii. Meeting Contract performance requirements; or

iii. At a reasonable price.

Information about this requirement, along with the list of EPA-designate items, is available at EPA's Comprehensive Procurement Guidelines web site, https://www.epa.gov/smm/comprehensive-procurement-guideline-cpg-program.

10. PROHIBITION ON CONTRACTING FOR COVERED TELECOMMUNICATIONS EQUIPMENT OR SERVICES.

(a) *Definitions.* As used in this clause, the terms backhaul; covered foreign country; covered telecommunications equipment or services; interconnection arrangements; roaming; substantial or essential component; and telecommunications equipment or services have the meaning as defined in Public Law 115-232, section 889, Prohibitions on Expending ARPA Award Funds for Covered Telecommunications Equipment or Services (Interim), as used in this clause—

(b) *Prohibitions.*

(1) Section 889(b) of the John S. McCain National Defense Authorization Act for Fiscal Year 2019, Pub. L. No. 115-232, and 2 C.F.R. § 200.216 prohibit the head of an executive agency on or after Aug.13, 2020, from obligating or expending grant, cooperative agreement, loan, or loan guarantee funds on certain telecommunications products or from certain entities for national security reasons.

(2) Unless an exception in paragraph (c) of this clause applies, the contractor and its subcontractors may not use grant, cooperative agreement, loan, or loan guarantee funds from a federal Agency to:
(i) Procure or obtain any equipment, system, or service that uses covered telecommunications equipment or services as a substantial or essential component of any system, or as critical technology of any system;
(ii) Enter into, extend, or renew a contract to procure or obtain any equipment, system, or service that uses covered telecommunications equipment or services as a substantial or essential component of any system, or as critical technology of any system;
(iii) Enter into, extend, or renew contracts with entities that use covered telecommunications equipment or services as a substantial or essential component of any system, or as critical technology as part of any system as described in Public Law 115-232, section 889, covered telecommunications equipment is telecommunications equipment produced by Huawei Technologies Company or ZTE Corporation (or any subsidiary or affiliate of such entities). (a) For the purpose of public safety, security of government facilities, physical security surveillance of critical infrastructure, and other national security purposes, video surveillance and telecommunications equipment produced by Hytera Communications Corporation, Hangzhou Hikvision Digital Technology Company, or Dahua Technology Company (or any subsidiary or affiliate of such entities). (bi) Telecommunications or video surveillance services provided by such entities or using such equipment. (c) Telecommunications or video surveillance equipment or services produced or provided by an entity that the Secretary of Defense, in consultation with the Director of the National Intelligence or the Director of the Federal Bureau of Investigation, reasonably believes to be an entity owned or controlled by, or otherwise connected to, the government of a covered foreign country; or
(iv) Provide, as part of its performance of this contract, subcontract, or other contractual instrument, any equipment, system, or service that uses covered telecommunications equipment or services as a substantial or essential component of any system, or as critical technology as part of any system.
(3) In implementing the prohibition under Public Law 115-232, section 889, subsection (f), paragraph (1), heads of executive agencies administering loan, grant, or subsidy programs shall prioritize available funding and technical support to assist affected businesses, institutions and organizations as is reasonably necessary for those affected entities to transition from covered communications equipment and services, to procure replacement equipment and services, and to ensure that communications service to users and customers is sustained.
(4) See Public Law 115-232, section 889 for additional information.
(5) See also § 200.471.
(c) *Exceptions.*
(1) This clause does not prohibit contractors from providing—
(i) A service that connects to the facilities of a third-party, such as backhaul, roaming, or interconnection arrangements; or
(ii) Telecommunications equipment that cannot route or redirect user data traffic or permit visibility into any user data or packets that such equipment transmits or otherwise handles.
(2) By necessary implication and regulation, the prohibitions also do not apply to:
(i) Covered telecommunications equipment or services that:
i. Are *not used* as a substantial or essential component of any system; *and*
ii. Are *not used* as critical technology of any system.
(ii) Other telecommunications equipment or services that are not considered covered telecommunications equipment or services.
(d) *Reporting requirement.*
(1) In the event the contractor identifies covered telecommunications equipment or services used as a substantial or essential component of any system, or as critical technology as part of any system, during contract performance, or the contractor is notified of such by a subcontractor at any tier or by any other source, the contractor shall report the information in paragraph (d)(2) of this clause to the recipient or subrecipient, unless elsewhere in this contract are established procedures for reporting the information.
(2) The Contractor shall report the following information pursuant to paragraph (d)(1) of this clause:

(i) Within one business day from the date of such identification or notification: The contract number; the order number(s), if applicable; supplier name; supplier unique entity identifier (if known); supplier Commercial and Government Entity (CAGE) code (if known); brand; model number (original equipment manufacturer number, manufacturer part number, or wholesaler number); item description; and any readily available information about mitigation actions undertaken or recommended.
(ii) Within 10 business days of submitting the information in paragraph (d)(2)(i) of this clause: Any further available information about mitigation actions undertaken or recommended. In addition, the contractor shall describe the efforts it undertook to prevent use or submission of covered telecommunications equipment or services, and any additional efforts that will be incorporated to prevent future use or submission of covered telecommunications equipment or services.
(e) *Subcontracts.* The Contractor shall insert the substance of this clause, including this paragraph (e), in all subcontracts and other contractual instruments.

11. DOMESTIC PREFERENCES FOR PROCUREMENTS.
As appropriate, and to the extent consistent with law, the contractor should, to the greatest extent practicable, provide a preference for the purchase, acquisition, or use of goods, products, or materials produced in the United States. This includes, but is not limited to iron, aluminum, steel, cement, and other manufactured products.
For purposes of this clause:
Produced in the United States means, for iron and steel products, that all manufacturing processes, from the initial melting stage through the application of coatings, occurred in the United States.
Manufactured products mean items and construction materials composed in whole or in part of non-ferrous metals such as aluminum; plastics and polymer-based products such as polyvinyl chloride pipe; aggregates such as concrete; glass, including optical fiber; and lumber.

12. COMPLIANCE WITH FEDERAL EXECUTIVE ORDERS
This is an acknowledgement that American Rescue Plan Act will be used to fund the Contract only. The Contractor will comply will all applicable federal law, regulations, executive orders, policies, procedures, and directives.

13. NO OBLIGATION BY THE FEDERAL GOVERNMENT
The Federal Government is not a party to this Contract and is not subject to any obligations or liabilities to the non-Federal entity, Contractor, or any other party pertaining to any matter resulting from the Contract.

14. PROGRAM FRAUD AND FALSE OR FRAUDULENT STATEMENTS OR RELATED ACTS
The Contractor acknowledges that 31 U.S.C. Chap. 38 (Administrative Remedies for False Claims and Statements) applies to the Contractor's actions pertaining to this contract.

15. CONTRACTING WITH SMALL AND MINORITY BUSINESSES, WOMEN'S BUSINESS ENTERPRISES, AND LABOR SURPLUS AREA FIRMS.
(a) Any party to this contract must take all necessary affirmative steps to assure that minority businesses, women's business enterprises, and labor surplus area firms are used when possible. These steps are also required for the hiring of any subcontractors under this contract.
(b) Affirmative steps must include:
(1) Placing qualified small and minority businesses and women's business enterprises on solicitation lists;
(2) Assuring that small and minority businesses, and women's business enterprises are solicited whenever they are potential sources;
(3) Dividing total requirements, when economically feasible, into smaller tasks or quantities to permit maximum participation by small and minority businesses, and women's business enterprises;

(4) Establishing delivery schedules, where the requirement permits, which encourage participation by small and minority businesses, and women's business enterprises; and
(5) Using the services and assistance, as appropriate, of such organizations as the Small Business Administration and the Minority Business Development Agency of the Department of Commerce.

16. COPYRIGHT AND DATA RIGHTS

The Contractor grants to the Parish, a paid-up, royalty-free, nonexclusive, irrevocable, worldwide license in data first produced in the performance of this contract to reproduce, publish, or otherwise use, including prepare derivative works, distribute copies to the public, and perform publicly and display publicly such data. For data required by the contract but not first produced in the performance of this contract, the Contractor will identify such data and grant to the Parish or acquires on its behalf a license of the same scope as for data first produced in the performance of this contract. Data, as used herein, shall include any work subject to copyright under 17 U.S.C. § 102, for example, any written reports or literary works, software and/or source code, music, choreography, pictures or images, graphics, sculptures, videos, motion pictures or other audiovisual works, sound and/or video recordings, and architectural works. Upon or before the completion of this contract, the Contractor will deliver to the Parish data first produced in the performance of this contract and data required by the contract but not first produced in the performance of this contract in formats acceptable by the Parish.

Note:

Davis-Bacon Act is NOT applicable to this project.

SECTION 13 – TECHNICAL SPECIFICATIONS

SECTION 00010

TABLE OF CONTENTS - TECHNICAL SPECIFICATIONS

DIVISION 01 - GENERAL REQUIREMENTS

01015	Control of Work	01015-1	-	01015-4
01025	Measurement and Payment	01025-1	-	01025-4
01027	Applications for Payment	01027-1	-	01027-2
01095	Codes and Standards	01095-1	-	01095-4
01153	Change Order Procedures	01153-1	-	01153-6
01200	Project Meetings	01200-1	-	01200-4
01300	Submittals	01300-1	-	01300-10
01320	Construction Scheduling	01320-1	-	01320-6
01370	Schedule of Values	01370-1	-	01370-2
01410	Testing Laboratory Services	01410-1	-	01410-4
01500	Temporary Facilities	01500-1	-	01500-4
01705	Project Closeout	01705-1	-	01705-2
01710	Cleaning	01710-1	-	01710-2
01720	Project Record Documents	01720-1	-	01720-6
01783	Warranties and Bonds	01783-1	-	01783-4

DIVISION 02 - SITEWORK

02160	Sheeting, Shoring, and Bracing	02160-1	-	02160-2
02200	Earthwork	02200-1	-	02200-10
02660	Testing of Pipelines	02660-1	-	02660-4
02800	Sewers and Appurtenances	02800-1	-	02800-4

DIVISION 03 - CONCRETE

03300	Cast-in-Place Concrete	03300-1	-	03300-14

DIVISION 04 - MASONRY

04200	Unit Masonry (CMU)	04220-1	-	04220-6

DIVISION 05 - METALS

05400	Cold-Formed Metal Framing	05400-1	-	05400-6
05500	Miscellaneous Metalwork	05500-1	-	05500-7

DIVISION 06 – DIVISION 07

(Not Used)

DIVISION 08 – DOORS AND WINDOWS

08110	Steel Doors and Frames	08110-1	-	08110-6
08331	Overhead Coiling Doors	08331-1	-	08331-4

DIVISION 09 - FINISHES

09960	Coatings	09960-1	-	09960-6

DIVISION 10

(Not-Used)

DIVISION 11 - EQUIPMENT

11151	Self-Priming Centrifugal Pumps	11151-1	-	11151-6
11301	Screenings Washing & Compacting Equipment	11301-1	-	11301-10
11330	Chain & Rake Bar Screen System	11330-1	-	11330-6

DIVISION 12 – DIVISION 13

(Not Used)

DIVISION 14 – CONVEYING SYSTEMS

14060	Hoist and Trolley	14060-1	-	14060-2

DIVISION 15 - MECHANICAL

15100	Valves and Appurtenances	15100-1	-	15100-9
15254	Stainless Steel Gates	15254-1	-	15254-6
15700	Ventilation Equipment	15700-1	-	15700-2

DIVISION 16 - ELECTRICAL

16060	Grounding and Bonding for Electrical Systems	16060-1	-	16060-6
16120	Low-Voltage Electrical Power Conductors and Cables	16120-1	-	16120-3
16130	Raceways and Boxes for Electrical Systems	16130-1	-	16130-5
16230	Engine Generators	16230-1	-	16230-16
16440	Panelboards	16440-1	-	16440-8
16445	Motor-Control Centers	16445-1	-	16445-14
16460	Low-Voltage Transformers	16460-1	-	16460-5
16510	LED Interior Lighting	16510-1	-	16510-6
16520	Exterior Lighting	16520-1	-	16520-5

SECTION 01015

CONTROL OF WORK

PART 1 - GENERAL

1.01. GENERAL WORK DESCRIPTION

A. The Contractor shall furnish personnel and equipment which will be efficient, appropriate, and large enough to secure a satisfactory quality of work and a rate of progress which will ensure the completion of the work within the time stipulated in the Contract. If at any time such personnel or equipment appears to the Engineer to be inefficient, inappropriate, or insufficient for securing the quality of work required for producing the rate of aforesaid progress, he may order the Contractor to increase the efficiency, change the character, or increase the personnel and equipment, and the Contractor shall conform to such order. Failure of the Engineer to give such order shall in no way relieve the Contractor of his obligations to secure the quality of the work and rate of progress required.

1.02. PRIVATE LAND

A. The Contractor shall not enter or occupy private land outside of the rights-of-way, easements, or servitudes, except by permission of the Owner.

1.03. WORK LOCATIONS

A. Work shall be located substantially in the areas that are indicated herein, but the Engineer reserves the right to make such modifications in locations as may be found desirable to avoid interference with existing structures or for other reasons.

B. Staging areas will be determined at the Pre-Construction Conference.

1.04. OPEN EXCAVATIONS

A. All open excavations shall be safeguarded by providing temporary barricades and fencing, caution signs, lights, and other means to prevent accidents to persons, and damage to property. The Contractor shall, at his own expense, provide suitable and safe bridges and other crossings for accommodating travel by pedestrians and workmen. Bridges provided for access to work areas during construction shall be removed when no longer required. The length of open trench will be controlled by the particular surrounding conditions, but may be confined to the limits prescribed by the Engineer. If the excavation becomes a hazard, or if it excessively restricts traffic at any point, the Engineer may require special construction procedures such as limiting the length of open trench, prohibiting stacking excavated material in the street, and requiring that the trench shall not remain open overnight.

B. The Contractor shall take precautions to prevent injury to the public due to open trenches. All trenches, excavated material, equipment, or other obstacles which could be dangerous to the public shall be barricaded and well lighted at all times when appropriate to ensure safety and when construction is not in progress.

1.05. UTILITIES

A. Disruption of the normal functioning of the utilities shall be held to the minimum extent possible.

B. If it appears that utility service will be interrupted for an extended period, the Engineer may order the Contractor to provide temporary service lines. Inconvenience to the users shall be minimized, consistent with existing conditions. The safety and integrity of the system are of prime importance

in scheduling work

C. The Contractor shall not move, cut, or relocate private utilities (gas, electric, telephone, cable T.V.) without the permission of the appropriate utility company.

D. The Contractor shall submit a plan for the rerouting of traffic if it becomes necessary to complete the work along with a proposed schedule for this work to the Engineer for approval.

1.06. PROTECTION AND RELOCATION OF EXISTING STRUCTURES AND UTILITIES

A. The Contractor shall assume full responsibility for the protection of all buildings, structures, and utilities, public or private, including poles, signs, services to building utilities, gas pipes, water pipes, hydrants, sewers, drains, and electric and telephone cables, whether or not they are shown on the Drawings. The Contractor shall carefully support and protect all such structures and utilities from injury of any kind. Any damage resulting from the Contractor's operation shall be repaired by him at his expense, or in the case of private utilities, repaired by that utility at the Contractor's expense.

B. The Contractor shall bear full responsibility for obtaining locations of all underground structures and utilities. Services to buildings shall be maintained, and all costs or charges resulting from damage thereto shall be paid by the Contractor.

C. If relocation of a privately owned utility is required, the Contractor shall notify the utility company as expeditiously as possible. The Contractor shall fully cooperate with the Owner and the utility company and shall have no claim for delay due to such relocation. The Contractor shall notify public and private utility companies in writing at least 48 hours (excluding Saturdays, Sundays, and legal holidays) before excavating near their utilities.

1.07. CARE AND PROTECTION OF PROPERTY

A. The Contractor shall be responsible for the preservation of all public and private property, and shall use every precaution necessary to prevent damage thereto. If any direct or indirect damage is done to public or private property by or on account of any act, omission, neglect, or misconduct in the execution of the work on the part of the Contractor, such property shall be restored by the Contractor, at his expense, to a condition similar or equal to that existing before the damage was done, or he shall make good the damage in another manner acceptable to the Engineer.

B. The protection, removal, and replacement of existing physical features along the line of work shall be a part of the work under the Contract, and all costs in connection therewith shall be included in the lump sum price(s) established in the Contractor's Bid.

1.08. MAINTENANCE OF TRAFFIC

A. Open pits, trenches, unpaved streets, debris, or other obstructions due to construction that will prevent the normal flow of traffic during an extended construction stoppage for any reason, shall be minimized. In the event an extended construction stoppage is found to be necessary, Contractor shall, at his own expense, provide normal traffic flow during extended construction stoppage. Extended stoppage will be defined by the Engineer.

B. All excavated material shall be placed so that vehicular and pedestrian traffic may be maintained at all times. If the Contractor's operations cause traffic hazards, he shall repair the road surface, provide temporary roadways, erect wheel guards or fences, or take other measures for safety satisfactory to the Engineer.

C. Detours around construction areas will be subject to the approval of the Owner and the Engineer. Where detours are permitted the Contractor shall provide all necessary barricades and signs as required to divert the flow of traffic. While traffic is detoured the Contractor shall expedite

construction operations and periods when traffic is being detoured will be strictly controlled by the Owner.

D. Traffic detour plans shall be provided to the Engineer prior to the need to divert the flow of traffic. All plans must be stamped by an experienced traffic engineer that meets the Engineer's approval. Plans must be submitted at least 30 days prior to the commencing of any work requiring traffic rerouting.

1.09. WATER FOR CONSTRUCTION PURPOSES

A. The Contractor may use Parish water for all construction purposes.

B. Hydrants shall only be operated under the supervision of the Utility Operator. No hydrants shall be left uncapped when construction personnel are not on the site.

1.10. MAINTENANCE OF EXISTING FLOW

A. The Contractor shall at his own cost, provide for the flow of sewers, drains, and water courses (storm drainage) interrupted during the progress of the Work, and shall immediately cart away and remove all offensive matter. The entire procedure of maintaining existing flow shall be fully discussed with the Engineer well in advance of the interruption of any flow.

1.11. CLEANUP

A. During the course of the Work, the Contractor shall keep the site of his operations in as clean and neat a condition as is possible. He shall dispose of all residue resulting from the construction and, at the conclusion of the work, he shall remove and haul away any surplus excavation, equipment, temporary structures, and any other refuse remaining from the construction operations, and shall leave the entire site of the Work in a neat and orderly condition.

PART 2 - PRODUCTS (NOT USED)

PART 3 - EXECUTION (NOT USED)

END OF SECTION 01015

THIS PAGE LEFT INTENTIONALLY BLANK

SECTION 01025

MEASUREMENT AND PAYMENT

PART 1 - GENERAL

1.01. SCOPE

A. This section covers methods of measurement and payment for items of Work included under this contract.

1.02. GENERAL

A. The total Bid Price shall cover all Work required by the Contract Documents. All costs in connection with the proper and successful completion of the Work, including furnishing all materials, equipment, supplies and appurtenances; providing all construction equipment and tools; and performing all necessary labor and supervision to fully complete the Work, shall be included in the unit prices or lump sum prices bid. All Work indicated in the Contract documents shall be assumed to be included in one of the Bid Items even if it is not specifically included in the descriptions of any of the Bid Items. Items of work not specifically set forth as a pay item in the Bid Form shall be considered a subsidiary obligation of Contractor and all costs in connection therewith shall be included in the prices bid.

1.03. ESTIMATED QUANTITIES

A. All estimated quantities stipulated in the Bid Form or other Contract Documents are approximate and are to be used only (a) as a basis for estimating the probable cost of the Work and (b) for the purpose of comparing the bids submitted for the Work. The actual amounts of work done and materials furnished under unit price items may differ from the estimated quantities. The basis of payment of work and materials will be the actual amount of work done and materials furnished. Contractor agrees that he will make no claim for damages, anticipated profits, or otherwise on account of any difference between the amounts of work actually performed and materials actually furnished and the estimated amounts there for.

1.04. EXCAVATION AND TRENCHING

A. Except where otherwise specified, the unit or lump sum price bid for each item of work which involves excavation or trenching shall include all costs for such work. All excavation and trenching shall be unclassified as to materials which may be encountered; in addition, trenches shall be unclassified as to depth.

1. Trenching for Pipelines:

a. No separate payment shall be made for excavation and trenching work required for pipelines except as otherwise specified herein. All such work shall be considered a subsidiary obligation of the Contractor and all costs in connection therewith shall be included in the unit price bid per linear foot of pipe in place.

2. Sheeting, Shoring, and Bracing:

a. No separate payment shall be made in connection with sheeting, shoring, and bracing, unless specified herein otherwise. All costs of labor, equipment, material, and other appurtenant work required for sheeting and bracing shall be included in the unit prices and lump sum prices bid.

1.05. MOBILIZATION (REF NO.: 1)

A. Mobilization shall consist of preparatory work and operations, including but not limited to those necessary for the movement of personnel, equipment, supplies and incidentals to the project site; the establishment of all offices, buildings and other facilities necessary for work on the project; the cost of bonds and any required insurance; and other preconstruction expenses necessary for the start of the work, excluding the cost of construction materials.

B. Partial payments for mobilization will be made in accordance with the following schedule up to a maximum of 5% of the original total contract price, including this item. Payment of any remaining amount will be made upon completion of all work under the contract.

Percent of Total Contract Amount Earned Lump	Allowable Percent of the Sum Price for the Item
1st Partial Estimate	25
10	50
25	75
50	100

No payment adjustments will be made for this item due to changes in the work.

1.06. SITE WORK (REF NO.: 2)

A. Site Work shall consist of all work items indicated on Drawing Sheets GC-1 & 2 and C-1 through C-3. Site Work generally consists of clearing, grubbing, cut, fill, yard piping, rough and finish grading, fencing, paving work, and all other incidental work required for a complete installation.

B. All work associated with this item will be paid for at the contract lump sum price bid. Progress payments shall be based on the approved Schedule of Values for the estimated percentage of the work completed per month.

1.07. STRUCTURAL WORK – WET WELL (REF NO.: 3)

A. Structural Work – Wet Well shall consist of all flat work and below grade work items indicated on Drawing Sheets GS-1 – 4 and S-1 through S-4. Structural Work – Wet Well generally consists of layout, excavation, sheeting, shoring, form work, reinforcing steel, concrete pouring and finishing, access hatches, backfill, and all other incidental work required for a complete installation.

B. All work associated with this item will be paid for at the contract lump sum price bid. Progress payments shall be based on the approved Schedule of Values for the estimated percentage of the work completed per month.

1.08. STRUCTURAL WORK – BUILDING (REF NO.: 4)

A. Structural Work – Building shall consist of all vertical and above grade work items indicated on Drawing Sheets GS-1 – 4 and S-1 through S-4. Structural Work – Building generally consists of layout and construction of concrete masonry units, framing and installation of building roof, installation of doors, and all other incidental work required for a complete installation.

B. All work associated with this item will be paid for at the contract lump sum price bid. Progress payments shall be based on the approved Schedule of Values for the estimated percentage of the work completed per month.

1.09. MECHANICAL WORK – PUMPS & PIPING (REF NO.: 5)

A. Mechanical Work – Pumps & Piping shall consist of all work indicated on Drawing Sheets GM-1, M-1 through M-3 inside and attached to the building, and M-4. Mechanical Work- Pumps & Piping generally consists of providing and installing pumps, piping, exhaust fans, louvers, valves, pipe supports, pump hoist and trolley, and all other incidental work required for a complete installation.

B. All work associated with this item will be paid for at the contract lump sum price bid. Progress payments shall be based on the approved Schedule of Values for the estimated percentage of the work completed per month.

1.10. MECHANICAL WORK – SCREENS (REF NO.: 6)

A. Mechanical Work – Screens shall consist of all work indicated on Drawing Sheets GM-1 and M-1 through M-3 related to the mechanical bar screens and influent channel. Mechanical Work- Screens generally consists of providing and installing mechanical bar screens, screenings washing and compacting equipment, slide gates, screenings dumpsters, deck grating, and all other incidental work required for a complete installation.

B. All work associated with this item will be paid for at the contract lump sum price bid. Progress payments shall be based on the approved Schedule of Values for the estimated percentage of the work completed per month.

1.11. ELECTRICAL WORK – POWER SUPPLY & LIGHTING (REF NO.: 7)

A. Electrical Work – Power Supply & Lighting shall consist of all work indicated on Drawing Sheets E-1 through E-16 related to providing power and lighting. Electrical Work – Power Supply & Lighting generally consists of providing and installing electrical switch gear, power panels, conduit, wiring, fixtures, and all other incidental work required for a complete installation.

B. All work associated with this item will be paid for at the contract lump sum price bid. Progress payments shall be based on the approved Schedule of Values for the estimated percentage of the work completed per month.

1.12. ELECTRICAL WORK – GENERATOR (REF NO.: 8)

A. Electrical Work – Generator shall consist of all work indicated on Drawing Sheets E-1 through E-16 related to the emergency back-up generator. Electrical Work – Generator generally consists of providing and installing the generator, automatic transfer switch, and all other incidental work required for a complete installation.

B. All work associated with this item will be paid for at the contract lump sum price bid. Progress payments shall be based on the approved Schedule of Values for the estimated percentage of the work completed per month.

1.13. ELECTRICAL WORK – CONTROLS (REF NO.: 9)

A. Electrical Work – Controls shall consist of all work indicated on Drawing Sheets E-1 through E-16 related to providing control panels and equipment. Electrical Work – Controls generally consists of providing and installing control panels, instrumentation, float switches, control programming, testing, start-up, and all other incidental work required for a complete installation.

B. All work associated with this item will be paid for at the contract lump sum price bid. Progress payments shall be based on the approved Schedule of Values for the estimated percentage of the work completed per month.

1.14. TEMPORARY SIGNS AND BARRICADES (REF NO.: 10)

A. All work associated with providing temporary signs and barricades shall be paid for on a lump sum basis. The lump sum price bid shall include all costs associated with providing temporary signs and barricades as indicated in the project plans or as required by the Owner.

1.15. SITE RESTORATION

A. No separate payment will be made in connection with site restoration. All work required to restore the project site shall be included in the lump sum price bid.

B. The project site shall be restored to its pre-construction condition including removing all debris and trash from the project site, replacement of any signage or items removed to facilitate construction, and all other incidental work required to restore the site to the satisfaction of the Owner.

END OF SECTION 01025

SECTION 01027

APPLICATIONS FOR PAYMENT

PART 1 - GENERAL

1.01. SUMMARY

A. This Section specifies administrative and procedural requirements governing the Contractor's Applications for Payment.

1.02. APPLICATIONS FOR PAYMENT

A. Each Application for Payment shall be consistent with previous applications and payments paid for by the Owner.

B. The initial Application for Payment, the Application for Payment at time of Substantial Completion, and the final Application for Payment involve additional requirements.

C. Payment Application Times: Payment dates will be decided at the Pre-Construction Conference.

D. Payment Application Forms: Use AIA Document G702 and Continuation Sheets G703.

E. Application Preparation: Complete every entry on the form, including notarization and execution by person authorized to sign legal documents on behalf of the Contractor. Incomplete applications will be returned without action.

1. Entries shall match data on the Schedule of Values and Contractor's Construction Schedule. Use updated schedules if revisions have been made.

2. Include amounts of Change Orders and Construction Change Directives issued prior to the last day of the construction period covered by the application.

3. Include itemized materials invoices for all amounts listed in the stored materials column.

F. Transmittal: Submit a sufficient number of executed copies of each Application for Payment to the Engineer. All copies shall be complete, including waivers of lien and similar attachments, as required by the Owner.

G. Transmit each copy with a transmittal letter listing attachments, and recording appropriate information related to the application to the Owner.

H. The Owner reserves the right to designate which entities involved in the Work must submit waivers.

I. Initial Application for Payment: Provide the following, if applicable, administrative actions and submittals prior to or with the first Application for Payment:

1. List of subcontractors.

2. List of principal suppliers and fabricators.

3. Schedule of Values.

4. Contractor's Construction Schedule (preliminary if not final).

5. Schedule of principal products.

6. Schedule of unit prices.

7. Submittal Schedule (preliminary if not final).

8. List of Contractor's staff assignments.

9. Copies of permits

10. Certificates of insurance and insurance policies.

11. Documentation of recorded agreement and bonds.

J. Application for Payment at Substantial Completion: Following issuance of the Certificate of Substantial Completion. Provide the following prior to or with this application:

1. Occupancy permits and similar approvals.

2. Warranties.

3. Maintenance instructions.

4. Final cleaning.

5. Final progress photographs.

6. List of incomplete Work, recognized as exceptions to Owner's Certificate of Substantial Completion.

K. Final Payment Application: Provide the following administrative actions and submittals prior to or with submittal of the final payment Application for Payment:

1. Completion of Project closeout requirements.

2. Completion of items specified for completion after Substantial Completion.

3. Transmittal of required Project construction records to Owner.

4. Consent of surety.

5. Removal of temporary facilities and services

6. Removal of surplus materials, rubbish and similar elements.

PART 2 - PRODUCTS (NOT USED)

PART 3 - EXECUTION (NOT USED)

END OF SECTION 01027

SECTION 01095

CODES AND STANDARDS

PART 1 - GENERAL

1.01. DESCRIPTION

A. Whenever reference is made to conforming to the standards of any technical society, organization, body, code, or standard, it shall be construed to mean the latest standard, code, specification, or tentative specification adopted and published at the time of the Advertisement for Bids. This shall include the furnishing of materials, testing of materials, fabrication, and installation practices. In those cases where the Contractor's quality standards establish more stringent quality requirements, the more stringent requirement shall prevail. Such standards are made a part hereof to the extent which is indicated or intended.

B. The inclusion of an organization under one category does not preclude that organization's standards from applying to another category.

C. In addition, all work shall comply with the applicable local codes, utilities, and other authorities having jurisdiction.

D. All material and equipment, for which a UL standard, an AGA or NSF approval or an ASME requirement is established, shall be so approved and labeled or stamped. The label or stamp shall be conspicuous and not covered, painted, or otherwise obscured from visual inspection.

E. The standards which apply to this project are not necessarily restricted to those organizations which are listed in Article 1.02.

1.02. STANDARD ORGANIZATIONS

AA	Aluminum Association
AABC	Associated Air Balance Council
AAMA	American Architectural Manufacturers' Association
AAN	American Association of Nurserymen
AASHTO	American Association of State Highway and Transportation Officials
ACI	American Concrete Institute
ACIL	American Council of Independent Laboratories
ACPA	American Concrete Pipe Association
ADC	Air Diffusion Council
AEIC	Association of Edison Illuminating Companies
AFBMA	Anti-Friction Bearing Manufacturers' Association
AGA	American Gas Association
AGMA	American Gear Manufacturers' Association
AHA	American Hardboard Association
AI	Asphalt Institute
AIA	American Institute of Architects
A.I.A.	American Insurance Association
AIEE	American Institute of Electrical Engineers
AISC	American Institute of Steel Construction
AISI	American Iron and Steel Institute
AITC	American Institute of Timber Construction
ALI	Automotive Lift Institute
AMCA	Air Movement & Control Association
ANSI	American National Standards Institute
APA	American Plywood Association
APHA	American Public Health Association

API	American Petroleum Institute
APWA	American Public Works Association
AREA	American Railway Engineering Association
ARI	American Refrigeration Institute
ARMA	Asphalt Roofing Manufacturers Association
ASA	American Standards Association
ASAE	American Society of Agricultural Engineers
ASC	Adhesive and Sealant Council
ASCE	American Society of Civil Engineers
ASHRAE	American Society of Heating, Refrigerating & Air-Conditioning Engineers
ASME	American Society of Mechanical Engineers
ASPE	American Society of Plumbing Engineers
ASQC	American Society of Duality Control
ASSE	American Society of Sanitary Engineering
ASTM	American Society of Testing and Materials
AWI	Architectural Woodwork Institute
AWPA	American Wood Preservers' Association
AWPB	American Wood Preservers' Bureau
AWS	American Welding Society
AWWA	American Water Works Association
BHMA	Builders' Hardware Manufacturers' Association
BIA	Brick Institute of America
CBMA	Certified Ballast Manufacturers' Association
CDA	Copper Development Association
CEMA	Conveyor Equipment Manufacturers Association
CFR	Code of Federal Regulations
CGA	Compressed Gas Association
CISPI	Cast Iron Soil Pipe Institute
CMAA	Crane Manufacturers' Association of America
CRSI	Concrete Reinforcing Steel Institute
CSI	Construction Specifications Institute
CTI	Cooling Tower Institute
DEMA	Diesel Engine Manufacturers Association
DHI	Door and Hardware Institute
DIPRA	Ductile Iron Pipe Research Association
EDA	Economic Development Administration
EIA	Electronic Industries Association
EIMA	Exterior Insulation Manufacturers Association
EJCDC	Engineers Joint Contracts Documents Committee
EPA	Environmental Protection Agency
Fed. Spec.	Federal Specifications
FCC	Federal Communications Commission
FCI	Fluid Controls Institute
FGMA	Flat Glass Marketing Association
FHA	Federal Housing Administration (U.S. Department of HUD)
FM	Factory Mutual Insurance Corp.
FmHA	Farmers Home Administration
FS	Federal Specifications
GA	Gypsum Association
HEI	Heat Exchange Institute
HI	Hydraulic Institute
HMA	Hardwood Manufacturers Association
HMI	Hoist Manufacturers' Institute
HPMA	Hardwood Plywood Manufacturers Association
HTI	Hand Tools Institute
IAI	International Association of Identification
ICBO	International Conference of Building Officials

ICEA	Insulated Cable Engineers Association
IEC	International Electromechanical Commission
IEEE	Institute of Electrical and Electronics Engineers
IES	Illuminating Engineering Society of North America
IIAR	International Institute of Ammonia Refrigeration
IME	Institute of Makers of Explosives
IPC	Institute of Printed Circuits
IPCEA	Insulated Power Cable Engineer's Association
IRI	Industrial Risk Insurers
ISA	Instrumentation, Systems, and Automation Society
ISANTA	International Staple, Nail, and Tool Association
ISDSI	Insulated Steel Door Systems Institute
ISEA	Industrial Safety Equipment Association
ISO	International Organization for Standardization
ITE	Institute of Traffic Engineers
LADOTD	Louisiana Department of Transportation and Development
LDEQ	Louisiana Department of Environmental Quality
LPI	Lightning Protection Institute
LSSRB	Louisiana Standard Specifications for Roads and Bridges
MBMA	Metal Building Manufacturers Association
MCAA	Mechanical Contractors Association of America
MMA	Monorail Manufacturers' Association
MSS	Manufacturers Standardization Society
NAAMM	National Association of Architectural Metal Manufacturers
NACE	National Association of Coatings Engineers
NAGDM	National Association of Garage Door Manufacturers
NAPA	National Asphalt Pavement Association
NB	National Board of Boiler and Pressure Vessel Inspectors
NBFU	National Board of Fire Underwriters
NBMA	National Builders' Hardware Association
NBS	National Bureau of Standards (U.S. Department of Commerce)
NCCLS	National Committee for Clinical Laboratory Standards
NCMA	National Concrete Masonry Association
NEC	National Electrical Code
NEMA	National Electrical Manufacturers' Association
NESC	National Electric Safety Code
NFPA	National Fire Protection Association
(NFPA)	National Fluid Power Association
NFSA	National Fertilizer Solutions Association
NHLA	National Hardwood Lumber Association
NISO	National Information Standards Organization
NLMA	National Lumber Manufacturers' Association
NRMA	National Ready-Mix Association
NSF	National Sanitation Foundation
NWMA	National Woodwork Manufacturers' Association
NWWDA	National Wood Window and Door Association
OECI	Overhead Electrical Crane Institute
OPEI	Outdoor Power Equipment Institute
OSHA	Occupational Safety and Health Act (both Federal & State)
PCA	Portland Cement Association
PCI	Pre-stressed Concrete Institute
PDI	Plumbing and Drainage Institute
PFMA	Power Fan Manufacturers Association
PPI	Plastic Pipe Institute
PS	Product Standards Sections - U.S. Department of Commerce
PTI	Power Tool Institute
REA	Rural Electrification Administration

RIA	Robotic Industries Association
RMA	Rubber Manufacturers' Association
SAE	Society of Automotive Engineers
SAMA	Scientific Apparatus Makers Association
SBC	Standard Building Code
SDI	Steel Deck Institute
S.D.I.	Steel Door Institute
SJI	Steel Joist Institute
SI	Salt Institute
SIA	Scaffold Industry Association
SMA	Screen Manufacturers Association
SMACNA	Sheet Metal and Air Conditioning Contractors Association
SMC	Standard Mechanical Code
SPC	Standard Plumbing Code
SPI	Society of the Plastics Industry
SPRI	Single-Ply Roofing Institute
SSPC	Society for Protective Coatings
TCA	Tile Council of America
TEMA	Tubular Exchanger Manufacturers' Association
TIA	Telecommunications Industries Association
TIMA	Thermal Insulation Manufacturers Association
UBC	Uniform Building Code
UL	Underwriter's Laboratories
Uni-Bell	PVC Pipe Association
USACE	U.S. Army Corps of Engineers
USDC	United States Department of Commerce
VRCI	Variable Resistive Components Institute
WEF	Water Environment Federation
WRI	Wire Reinforcement Institute
WWPA	Western Wood Products Association
W.W.P.A.	Woven Wire Products Association

PART 2 - PRODUCTS (NOT USED)

PART 3 - EXECUTION (NOT USED)

END OF SECTION 01095

SECTION 01153

CHANGE ORDER PROCEDURES

PART 1 - GENERAL

1.01. REQUIREMENTS INCLUDED

A. Promptly implement change order procedures.

1. Provide full written data required to evaluate changes.

2. Maintain detailed records of work done on a time-and-material/ force account basis.

3. Provide full documentation to Engineer on request.

B. Designate in writing the member of Contractor's organization:

1. Who is authorized to accept changes in the work.

2. Who is responsible for informing others in the Contractor's employ of the authorization of changes in the work.

C. Owner will designate in writing the person who is authorized to execute Change Orders.

1.02. DEFINITIONS

A. Change Order: See Contract for Construction.

B. Construction Change Authorization: A written order to the Contractor, signed by Owner and Engineer, which amends the Contract Documents as described and authorizes Contractor to proceed with a change which affects the Contract Sum or the Contract Time, for inclusion in a subsequent Change Order.

C. Field Order: A written order to the Contractor signed by the Engineer and the Contractor, which is issued to interpret/clarify the Contract Documents, order minor changes in the work and/or memorialize trade-off agreements. The work described by a Field Order is to be accomplished without change to the Contract Sum, Contract Time, and/or claims for other costs.

1.03. PRELIMINARY PROCEDURES

A. Owner or Engineer may initiate changes by submitting a Request for Proposal (RFP) to Contractor. Request will include:

1. Detailed description of the Change, Products and location of the change in the project.

2. Supplementary or revised Drawings and Specifications.

3. The projected time span for making the change and a specific statement as to whether overtime work is, or is not, authorized.

4. A specific period of time during which the requested price will be considered valid.

5. Such request is for information only and is not an instruction to execute the changes, nor to stop work in progress.

B. Contractor may initiate changes by submitting a written notice to Engineer, containing:

1. Description of the proposed changes.

2. Statement of the reason for making the changes.

3. Statement of the effect on the Contract Sum and the Contract Time.

4. Statement of the effect on the work of separate contractors.

5. Documentation supporting any change in Contract Sum or Contract Time, as appropriate.

1.04. WORK DIRECTIVE CHANGE AUTHORIZATION

A. In lieu of a Request for Proposal (RFP), Engineer may issue a work directive authorization for Contractor to proceed with a change for subsequent inclusion in a Change Order.

B. Authorization will describe changes in the work, both additions and deletions, with attachments of revised Contract Documents to define details of the change and will designate the method of determining any change in the Contract Sum and any change in Contract Time.

C. Owner and Engineer will sign and date the Work Directive Change Authorization as authorization for the Contractor to proceed with the changes.

D. Contractor will sign and date the Construction Change Authorization to indicate agreement with the terms therein.

1.05. DOCUMENTATION OF PROPOSALS AND CLAIMS

A. Support each quotation for a lump-sum proposal and for each unit price which has not previously been established, with sufficient substantiating data to allow Engineer to evaluate the quotation.

B. On request, provide additional data to support time and cost computations including:

1. Labor required.

2. Equipment required.

3. Products required.

a. Recommended source of purchase and unit cost.

b. Quantities required.

4. Taxes, insurance and bonds.

5. Credit for work deleted from Contract, similarly documented.

6. Overhead and profit.

7. Justification for any change in Contract Time.

C. Support each claim for additional costs and for work done on a time-and-material/force account basis, with documentation as required for a lump-sum proposal, plus additional information.

1. Name of the Owner's authorized agent who ordered the work and date of the order.

2. Dates and times work was performed and by whom.

3. Time record, summary of hours worked and hourly rates paid.

4. Receipts and invoices for:

a. Equipment used, listing dates and times of use.

b. Products used, listing of quantities.

c. Subcontracts.

1.06. PREPARATION OF CHANGE ORDERS AND FIELD ORDERS

A. Engineer will prepare each Change Order and Field Order.

B. Change Order will describe changes in the work, both additions and deletions, with attachments of revised Contract Documents to define details of the change.

C. Change Order will provide an accounting of the adjustment in the Contract Sum and in the Contract Time.

D. Field Order will describe interpretations or clarifications of Contract Documents, order minor changes in the work, and/or memorialize trade-off agreements.

E. Field Order work will be accomplished without change in the Contract Sum, Contract Time, and/or claims for other costs.

1.07. LUMP-SUM/FIXED PRICE CHANGE ORDER

A. Content of Change Orders will be based on, either:

1. Engineer's Proposal Request and Contractor's responsive Proposal as mutually agreed between Owner and Contractor.

2. Contractor's Proposal for a change, as recommended by Engineer.

B. Owner and Engineer will sign and date the Change Order as authorization for the Contractor to proceed with the changes.

C. Contractor will sign and date the Change Order to indicate agreement with the terms therein.

1.08. UNIT PRICE CHANGE ORDER

A. Content of Change Orders will be based on, either:

1. Engineer's definition of the scope of the required changes.

2. Contractor's Proposal for a change, as recommended by Engineer.

3. Survey of completed work.

B. The amounts of the unit prices to be:

1. Those stated in the Agreement.

2. Those mutually agreed upon between Owner and Contractor.

C. When quantities of each of the items affected by the Change Order can be determined prior to start of the work:

1. Owner and Engineer will sign and date the Change Order as authorization for Contractor to proceed with the changes.

2. Contractor will sign and date the Change Order to indicate agreement with the terms therein.

D. When quantities of the items cannot be determined prior to start of the work:

1. Engineer or Owner will issue a construction change authorization directing Contractor to proceed with the change on the basis of unit prices, and will cite the applicable unit prices.

2. At completion of the change, Engineer will determine the cost of such work based on the unit prices and quantities used.

a. Contractor shall submit documentation to establish the number of units of each item and any claims for a change in Contract Time.

3. Engineer will sign and date the Change Order to establish the change in Contract Sum and in Contract Time.

4. Owner and Contractor will sign and date the Change Order to indicate their agreement with the terms therein.

1.09. TIME AND MATERIAL/FORCE ACCOUNT CHANGE ORDER/WORK DIRECTIVE CHANGE AUTHORIZATION

A. Engineer and Owner will issue a Work Directive Change Authorization directing Contractor to proceed with the changes.

B. At completion of the change, submit itemized accounting and supporting data as provided in the Article "Documentation of Proposals and Claims" of this Section.

C. Engineer will determine the allowable cost of such work, as provided in General Conditions and Supplementary Conditions.

D. Engineer will sign and date the Change Order to establish the change in Contract Sum and in Contract Time.

E. Owner and Contractor will sign and date the Change Order to indicate their agreement therewith.

1.10. CORRELATION WITH CONTRACTOR'S SUBMITTALS

A. Periodically revise Schedule of Values and Request for Payment forms to record each change as a separate item of work, and to record the adjusted Contract Sum.

B. Periodically revise the Construction Schedule to reflect each change in Contract Time.

1. Revise subschedules to show changes for other items of work affected by the changes.

C. Upon completion of work under a Change Order, enter pertinent changes in Record Documents.

PART 2 - PRODUCTS (NOT USED)

PART 3 - EXECUTION (NOT USED)

END OF SECTION 01153

THIS PAGE LEFT BLANK INTENTIONALLY

SECTION 01200

PROJECT MEETINGS

PART 1 - GENERAL

1.01. SCOPE OF WORK

A. Schedule, attend, and administer as specified, preconstruction conference, periodic progress meetings, and specially called meetings throughout progress of the Work.

B. Representatives of Contractor, subcontractors and suppliers attending meetings shall be qualified and authorized to act on behalf of the entity each represents.

C. Meetings, in addition to those specified in this Section, may be held when requested by the Owner, Engineer or Contractor.

1.02. PRECONSTRUCTION CONFERENCE

A. A preconstruction conference will be held within ten days after award of Contract and before Work is started. The conference will be scheduled by the Engineer.

B. The Engineer will preside at the conference, prepare the minutes of the meeting and distribute copies of same to all participants who so request by fully completing the attendance form to be circulated at the beginning of the conference.

C. Attendance:

1. Contractor's project manager.

2. Contractor's superintendent.

3. Any subcontractor or supplier representatives whom the Contractor may desire to invite or the Owner may request.

4. Engineer's representatives.

5. Owner's representatives, including Program Manager.

6. Others as appropriate.

D. Preliminary Agenda:

1. Introductions.

2. Schedule completion dates and liquidated damages.

3. Construction scheduling.

4. Designation of responsible personnel.

5. Authority of Contractor.

6. Authority of Engineer.

7. Submittals.

8. Procedures for Change Orders, CMRs, PCMs, Field Orders, RFIs, etc.

9. Record Drawings

10. Quality control.

11. Safety procedures.

12. Temporary construction facilities.

13. Temporary utilities facilities.

14. Security and work after normal hours.

15. Measurement and payment.

16. City administrative procedures.

17. Project work summary.

18. Correspondence routing.

19. Pay request format, submittal cutoff date, pay date, and retainage.

20. Work staging areas.

1.03. PROGRESS MEETINGS

A. Formal project coordination meetings will be held periodically (not more than once weekly, nor less than once monthly). Meetings will be scheduled by the Engineer. Additional progress meetings to discuss specific topics will be conducted on an as-needed basis. Such additional meetings shall include, but not be limited to:

1. Coordinating plant/equipment shutdowns.

2. Installation of equipment.

3. Start-up of equipment or plant.

4. Problem Area Resolutions

5. Equipment approval.

B. The Engineer will preside at progress meetings, prepare the minutes of the meeting and distribute copies of same to all participants who so request by fully completing the attendance form to be circulated at the beginning of each meeting.

C. Attendance: Same as preconstruction conference.

D. Preliminary Agenda:

1. Review, approval of minutes of previous meeting.

2. Review of work progress since previous meeting.

3. Field observations, problems, conflicts.

4. Problems which impede construction schedule.

5. Review of off-site fabrication, delivery schedules.

6. Review of construction interfacing and sequencing requirements with other construction contracts.

7. Corrective measures and procedures to regain projected schedule.

8. Revisions to construction schedule.

9. Progress, schedule, during succeeding work period.

10. Coordination of schedules.

11. Review submittal schedules.

12. Maintenance of quality standards.

13. Pending changes and substitutions.

14. Review proposed changes for:

    a. Effect on construction schedule and on completion date.

    b. Effect on other contracts of the Project.

15. Review Record Documents.

16. Review monthly pay request.

17. Review status of RFIs.

PART 2 - PRODUCTS (NOT USED)

PART 3 - EXECUTION (NOT USED)

END OF SECTION 01200

THIS PAGE LEFT BLANK INTENTIONALLY

SECTION 01300

SUBMITTALS

PART 1 - GENERAL

1.01. SUMMARY

A. This Section specifies administrative and procedural requirements for submittals required for performance of the Work, including:

1. Contractor's construction schedule.

2. Submittal schedule.

3. Daily construction reports.

4. Shop Drawings.

5. Product Data.

6. Samples.

B. Administrative Submittals: Refer to other Division-1 Sections and other Contract Documents for requirements for administrative submittals. Such submittals include, but are not limited to:

1. Permits.

2. Applications for payment.

3. Insurance certificates.

4. List of Subcontractors.

1.02. SUBMITTAL PROCEDURES

A. Coordination: Coordinate preparation and processing of submittals with performance of construction activities. Transmit each submittal sufficiently in advance of performance of related construction activities to avoid delay.

B. Coordinate each submittal with fabrication, purchasing, testing, delivery, other submittals and related activities that require sequential activity.

C. Coordinate transmittal of different types of submittals for related elements of the Work so processing will not be delayed by the need to review submittals concurrently for coordination.

D. The Owner reserves the right to withhold action on a submittal requiring coordination with other submittals until related submittals are received. Submittals requiring color selection shall be held until all applicable submittals are received and color selections have been made.

E. Processing: Allow sufficient review time so that installation will not be delayed as a result of the time required to process submittals, including time for resubmittals.

1. Allow seven days for initial review. Allow additional time if processing must be delayed to permit coordination with subsequent submittals. The Owner will return the submittal with no action taken when a submittal must be delayed for coordination with other submittals.

F. If an intermediate submittal is necessary, process the same as the initial submittal.

G. Allow seven days for reprocessing each submittal.

H. No extension of Contract Time will be authorized because of failure to transmit submittals to the Engineer sufficiently in advance of the Work to permit processing.

I. Submittal Preparation: Prepare an 8½" x 11" cover sheet on the Contractor's letterhead. Indicate the name of the person that prepared the submittal. Staple a copy of the cover sheet to each copy of the submittal. Provide a space approximately 7" x 7½" on the cover sheet to record the review and approval markings, and the action taken. Use the sample form at end of this Section as a guide. Include the following information on the cover sheet for processing and recording action taken:

1. Date

2. Project Name and Number

3. Specification section number and name.

4. Contractor's Stamp.

J. Submittal Transmittal: Package each set of submittals separately for transmittal and handling. Transmit each submittal from Contractor to Owner using the prescribed transmittal form and cover sheet. Fill in all blanks. Submittals received from other sources other than the Contractor or not in the specified forms will be returned without action.

K. Record relevant information and requests for data. On the form, or separate sheet, record deviations from Contract Document requirements, including minor variations and limitations. Include Contractor's certification that information complies with Contract Document requirements.

L. Transmittal Form: Use the sample form at the end of this Section for transmittal of submittals.

1.03. CONTRACTOR'S CONSTRUCTION SCHEDULE

A. Bar-Chart Schedule: Prepare a fully developed, horizontal bar-chart type Contractor's construction schedule that can be used to plan, organize and execute the work, record and report actual performance and progress. **Submit within 7 days from the date of the "Notice to Proceed."**

B. Provide a separate time bar for each significant construction activity. Provide a continuous vertical line to identify the first working day of each week. Use the same breakdown of units of the Work as indicated in the "Schedule of Values". Include the following information on the schedule:

1. Activity description.

2. Durations in work days for each activity.

3. Earliest start date (by calendar date).

4. Earliest finish date (by calendar date).

5. Latest start date (by calendar date).

6. Latest finish date (by calendar date).

7. Slack or float in work days.

8. Percentage of activity completed.

9. Schedule shall be value-loaded to coordinate with the schedule of values.

C. Prepare the schedule on a sheet, or series of sheets, of stable transparency, or other reproducible media, of sufficient width to show data for the entire construction period.

D. Secure time commitments for performing critical elements of the Work from parties involved. Coordinate each element on the schedule with other construction activities; include minor elements involved in the sequence of the Work. Show each activity in proper sequence. Indicate graphically sequences necessary for completion of related portions of the Work.

E. Coordinate the Contractor's construction schedule with the schedule of values, list of subcontracts, submittal schedule, progress reports, payment requests and other schedules.

F. Area Separations: Provide a separate time bar to identify each major construction area for each major portion of the Work. Indicate where each element in an area must be sequenced or integrated with other activities.

G. Distribution: Following response to the initial submittal, print and distribute copies to the Owner, subcontractors, and other parties required to comply with scheduled dates.

H. Schedule Updating: Revise the schedule after each meeting or activity, where revisions have been recognized or made. Issue the updated schedule concurrently with report of each meeting.

1.04. SUBMITTAL SCHEDULE

A. Concurrently with the development and the acceptance of the Contractor's construction schedule, prepare a complete schedule of submittals. Submit the schedule with the Contractor's construction schedule.

B. Coordinate submittal schedule with the list of subcontracts, schedule of values and the list of products as well as the Contractor's construction schedule.

C. Prepare the schedule in chronological order of construction. Provide the following information:

1. Scheduled date for the first submittal.

2. Related Section number.

3. Submittal category.

4. Name of subcontractor.

5. Description of the part of the Work covered.

6. Scheduled date for resubmittal

7. Scheduled date the Owner's final release or approval.

D. Distribution: Distribute copies to the Owner, subcontractors, and other parties required to comply with submittal dates indicated.

E. When revisions are made, distribute to the same parties and post in the same locations. Delete parties from distribution when they have completed their assigned portion of the Work and are no longer involved in construction activities.

F. Schedule Updating: Revise the schedule after each meeting or activity, where revisions have been recognized or made. Issue the updated schedule concurrently with report of each meeting.

1.05. DAILY CONSTRUCTION REPORTS

A. Prepare a daily construction report, recording the following information concerning events at the site; and submit duplicate copies to the Owner at weekly intervals:

1. List of subcontractors at the site.

2. Approximate count of personnel at the site, high and low temperatures, general weather conditions.

3. Accidents and unusual events.

4. Meetings and significant decisions.

5. Stoppages, delays, shortages, losses.

6. Emergency procedures.

7. Orders and requests of governing authorities.

8. Change Orders received, implemented.

9. Services connected, disconnected.

10. Equipment or system tests and start-ups.

11. Partial Completions, occupancies.

12. Substantial Completions authorized.

1.06. SHOP DRAWINGS

A. Submit newly prepared information, drawn to accurate scale. Highlight, encircle, or otherwise indicate deviations from the Contract Documents. Do not reproduce Contract Documents or copy standard information as the basis of Shop Drawings. Standard information prepared without specific reference to the Project is not considered Shop Drawings.

B. Copies, manufacturer’s data sheets and other information which is illegible will cause the submission to be returned to the contractor for resubmission in legible form.

C. Shop Drawings include fabrication and installation drawings, setting diagrams, schedules, patterns, templates and similar drawings. Include the following information:

1. Dimensions.

2. Identification of products and materials included.

3. Compliance with specified standards.

4. Notation of coordination requirements.

5. Notation of dimensions established by field measurement.

D. Sheet Size: Except for templates, patterns and similar full- size Drawings, submit Shop Drawings on sheets at least 8-1/2" x 11" but no larger than 24" x 36".

E. Initial Submittal: Submit one correctable translucent reproducible print and one blue-line or black-line print for the Owner's review; the reproducible print will be returned. If submittal is returned and resubmittal is required, follow the same procedure.

F. Do not use Shop drawings without an appropriate final stamp indicating action taken in connection with construction.

G. Coordinate distribution of shop drawings to appropriate personnel. Maintain additional copies for project record documents.

H. Coordination drawings are a special type of Shop Drawing that show the relationship and integration of different construction elements that require careful coordination during fabrication or installation to fit in the space provided or function as intended.

I. Preparation of coordination Drawings is specified in section "Project Coordination" and may include components previously shown in detail on Shop Drawings or Product Data.

J. Submit coordination Drawings for integration of different construction elements. Show sequences and relationships of separate components to avoid conflicts in use of space.

1.07. PRODUCT DATA

A. Collect Product Data into a single submittal for each element of construction or system. Product Data includes printed information such as manufacturer's installation instructions, catalog cuts, standard color charts, roughing-in diagrams and templates, standard wiring diagrams and performance curves. Where Product Data must be specially prepared because standard printed data is not suitable for use, submit as "Shop Drawings."

B. Mark each copy to show applicable choices and options. Where printed Product Data includes information on several products, some of which are not required, mark copies to indicate the applicable information. Include the following information:

1. Manufacturer's printed recommendations.

2. Compliance with recognized trade association standards.

3. Compliance with recognized testing agency standards.

4. Application of testing agency labels and seals.

5. Notation of dimensions verified by field measurement.

6. Notation of coordination requirements.

C. Do not submit Product Data until compliance with requirements of the Contract Documents has been confirmed.

D. Submittals:

1. Submit 6 copies of each required submittal. The Owner will retain one, and will return the others marked with action taken and corrections or modifications required.

2. Submittals for each item shall be consecutively numbered without division by subcontracts or trades. Resubmittals shall bear the number of the first submittal followed by a letter (A,B, etc.) to indicate the sequence of resubmittal.

E. Unless noncompliance with Contract Document provisions is observed, the submittal may serve as the final submittal.

F. Distribution: Furnish copies of final submittal to installers, subcontractors, suppliers, manufacturers, fabricators, and others required for performance of construction activities. Show distribution on transmittal forms.

G. Do not proceed with installation until an applicable copy of Product Data applicable is in the installer's possession.

H. Do not permit use of unmarked copies of Product Data in connection with construction.

1.08. SAMPLES

A. Submit full-size, fully fabricated Samples cured and finished as specified and physically identical with the material or product proposed. Samples include partial sections of manufactured or fabricated components, cuts or containers of materials, color range sets, and swatches showing color, texture and pattern. Include the following:

1. Generic description of the Sample.

2. Sample source.

3. Product name or name of manufacturer.

4. Compliance with recognized standards.

5. Availability and delivery time.

B. Submit Samples for review of kind, color, pattern, and texture, for a final check of these characteristics with other elements, and for a comparison of these characteristics between the final submittal and the actual component as delivered and installed.

C. Where variation in color, pattern, texture or other characteristics are inherent in the material or product represented, submit multiple units (not less than 3), that show approximate limits of the variations.

D. Refer to other Specification Sections for requirements for Samples that illustrate workmanship, fabrication techniques, details of assembly, connections, operation and similar construction characteristics.

E. Refer to other Sections for Samples to be returned to the Contractor for incorporation in the Work. Such Samples must be undamaged at time of use. On the transmittal, indicate special requests regarding disposition of Sample submittals.

F. Maintain sets of Samples, as returned, at the Project site, for quality comparisons throughout the course of construction.

G. Sample sets may be used to obtain final acceptance of the construction associated with each set.

H. Comply with submittal requirements to the fullest extent possible. Process transmittal forms to provide a record of activity.

1.09. ENGINEER'S ACTION

A. Except for submittals for record, information or similar purposes, where action and return is required or requested, the Engineer will review each submittal, mark to indicate action taken, and return promptly. Compliance with specified characteristics is the Contractor's responsibility.

B. Action Stamp: The Engineer will stamp each submittal with a uniform, self-explanatory action stamp. The stamp will be appropriately marked, as follows, to indicate the action taken:

1. Where submittals are marked "CONFORMS WITH CONCEPT", that part of the Work covered by the submittal may proceed provided it complies with requirements of the Contract Documents; final acceptance will depend upon that compliance.

2. When submittals are marked "CONFORMS AS NOTED" that part of the Work covered by the submittal may proceed provided it complies with notations or corrections on the submittal and requirements of the Contract Documents; final acceptance will depend on that compliance.

3. When submittals are marked "REJECTED" or "REVISE AND RESUBMIT" or "SUBMIT SPECIFIED ITEM", do not proceed with that part of the Work covered by the submittal, including purchasing, fabrication, delivery, or other activity. Revise or prepare a new submittal in accordance with the notations; resubmit without delay. Repeat if necessary to obtain a different action mark.

C. Do not permit submittals marked "REJECTED" and "REVISE AND RESUBMIT", or "CONFORMS AS NOTED" or "SUBMIT SPECIFIED ITEM", to be used at the Project site, or elsewhere where Work is in progress.

D. Other Action: Where a submittal is primarily for information or record purposes, special processing or other activity, the submittal will be returned, unmarked with only date and signature.

PART 2 - PRODUCTS (NOT USED).

PART 3 - EXECUTION (NOT USED).

END OF SECTION 01300

Contractor's Letterhead

SUBMITTAL TRANSMITTAL

DATE:

TO: Kyle Associates, LLC
638 Village Lane North
Mandeville, LA 70471

RE: _____

PRODUCT/MATERIAL:	Provide general description of material. (Example: Reinforced Concrete Pipe).
SECTION NUMBER AND NAME:	Refer to Specification Section or Table of Contents. (Example: 02720 – Storm Sewerage).
TYPE OF SUBMITTAL:	State type of Submittal(s): Shop Drawings, Coordination Drawings, Samples, Product Data, or other Submittals.
NUMBER OF COPIES:	State number of copies or samples.
NUMBER OF SHEETS:	State number of sheets in submittal.
CONTRACTORS SUBMITTAL NO.:	Indicate submittal number shown on the Contractor's Submittal Schedule.
DATE OF SUBMITTAL:	Indicate date on Contractor's stamp on submittal.
SUBCONTRACTOR:	Indicate name of entity performing work.
SUPPLIER:	Indicate name of entity supplying product.
DEVIATIONS:	Indicate any deviation from the specifications. If no deviations from products specified, indicate that no deviations exist.
REMARKS:	Indicate any supplement comments concerning this submittal. Example: This submittal is required for installation of drainage. Please expedite as soon as possible.

BY: _____
Name of person preparing Submittal.
Contractor's Name.

Contractor's Letterhead
COVER SHEET

DATE:

RE:_____

This space reserved for stamps.

SECTION 01320

CONSTRUCTION SCHEDULING

PART 1 - GENERAL

1.01. GENERAL

A. Scheduling of the WORK shall be performed by the CONTRACTOR in accordance with the requirements of this Section.

B. Development of the schedule and project status reporting requirements of the Contract shall employ computerized Critical Path Method (CPM) The CPM schedule and all reports should be prepared with the current version of Primavera Project Planner (P3) software or equivalent scheduling software platform. Where submittals are required hereunder, the CONTRACTOR shall submit a number and type of copies as established at the pre – construction conference.

1.02. INITIAL SCHEDULE SUBMITTALS

A. The CONTRACTOR shall submit two short term schedule documents at the Preconstruction Conference which shall serve as the CONTRACTOR'S Plan of Operation for the initial 60 day period of the Contract Time and to identify the manner in which the CONTRACTOR intends to complete all WORK within the Contract Time.

1. 60 Day Plan of Operation: During the initial 60 days of the Contract Time, the CONTRACTOR shall conduct operations in accordance with a 60 day bar chart type of plan of operation. The bar chart so prepared shall show the accomplishment of the CONTRACTOR'S early activities (mobilization, permits, submittals necessary for early material and equipment procurement, submittals necessary for long lead equipment procurement, CPM submittals, initial Site work and other submittals and activities required in the first 60 days).

2. Project Overview Bar Chart: The overview bar chart shall indicate the major components of the WORK and the sequence relations between major components and subdivisions of major components. The overview bar chart shall indicate the relationships and time frames in which the various components of the WORK will be made substantially complete and placed into service in order to meet the project milestones. Sufficient detail shall be included for the identification of subdivisions of major components into such activities as excavation, pile driving, completion of all structural concrete, major mechanical work, major electrical work, instrumentation and control work, and other important work for each major item of the WORK within the overall project scope. Planned durations and start dates shall be indicated for each work item subdivision. Each major component and subdivision component shall be accurately plotted on time scale sheets not to exceed 36-inch by 60-inch in size. Not more than four sheets shall be employed to represent this overview information.

B. The ENGINEER and the CONTRACTOR shall meet to review and discuss the 60-day plan of operation and project overview bar chart within 5 days after submittal to the ENGINEER. The ENGINEER'S review and comment on the schedules will be limited to conformance with the sequencing and milestone requirements in the Contract Documents. The CONTRACTOR shall make corrections to the schedules necessary to comply with the requirements and shall adjust the schedules to incorporate any missing information requested by the ENGINEER.

1.03. CPM SCHEDULE SUBMITTALS

A. Original CPM Schedule Submittal: With 30 days after the commencement date stated in the Notice to Proceed, the CONTRACTOR shall submit for review by the ENGINEER a hard copy and electronic copy of the CPM Schedule. This submittal shall have already been reviewed and approved by the CONTRACTOR'S Project Manager prior to submission. The CPM Schedule shall be a time-scaled network diagram of the "i-j" activity-on-arrow or precedence type. The Network Diagram shall describe the activities to be accomplished and their logical relationships and show the critical path.

B. All float in the schedule shall belong to the project

C. Acceptance

1. Acceptance of the CONTRACTOR'S schedule by the ENGINEER and OWNER will be based solely upon compliance with the requirements. By way of the CONTRACTOR assigning activity durations and proposing the sequence of the WORK, the CONTRACTOR agrees to utilize sufficient and necessary management and other resources to perform the work in accordance with the schedule. Upon submittal of a schedule update, the updated schedule shall be considered the "current" project schedule.

2. Submission of the CONTRACTOR'S progress schedule to the OWNER or ENGINEER shall not relieve the CONTRACTOR of total responsibility for scheduling, sequencing, and pursuing the WORK to comply with the requirements of the Contract Documents, including adverse effects such as delays resulting from ill-timed WORK.

D. Monthly Updates and Periodic CPM Schedule Submittals

1. Following the acceptance of the CONTRACTOR'S original CPM Schedule, the CONTRACTOR shall monitor the progress of the WORK and adjust the schedule each month to reflect actual progress and any changes in planned future activities. Each schedule update submitted shall be complete including all information requested in the original schedule submittal and be in the schedule report format indicated below. Each update shall continue to show all work activities including those already completed. Completed activities shall accurately reflect "as built" information by indicating when the work was actually started and completed.

2. Neither the submission nor the updating of the CONTRACTOR'S original schedule submittal nor the submission, updating, change, or revision of any other report, curve, schedule, or narrative submitted to the ENGINEER by the CONTRACTOR under this Contract, nor the ENGINEER'S review or acceptance of any such report, curve, schedule, or narrative shall have the effect of amending or modifying, in any way, the Contract Times or milestone dates or of modifying or limiting, in any way, the CONTRACTOR'S obligations under this Contract. Only a signed, fully executed Change Order can modify contractual obligations.

3. The monthly schedule update submittal will be reviewed with the CONTRACTOR during regular construction progress meetings. The goal of these meetings is to enable the CONTRACTOR and the ENGINEER to initiate appropriate remedial action to minimize any known or foreseen delay in completion of the WORK and to determine the amount of WORK completed since the previous schedule update.

E. Schedule Revisions: The CONTRACTOR shall highlight or otherwise identify all changes to the schedule logic or activity durations made from the previous schedule. The CONTRACTOR shall modify any portions of the CPM schedule which become infeasible because of activities behind schedule or for any other valid reason.

1.04. CHANGE ORDERS

A. Upon approval of a Change Order, or upon receipt by the CONTRACTOR of authorization to proceed with additional work, the change shall be reflected in the next submittal of the CPM Schedule. The CONTRACTOR shall utilize a sub-network in the schedule depicting the changed work and its effect on other activities. This sub-network shall be tied to the main network with appropriate logic so that a true analysis of the critical path can be made.

1.05. CPM STANDARDS

A. Definitions: CPM, as required by this Section, shall be interpreted to be generally as outlined in the Association of General Contractors (AGC) publication, "The Use of CPM in Construction." except that either "i-j" arrow diagrams or precedence diagramming format may be utilized. In the case of conflicts between this specification and the AGC document, this specification shall govern.

B. Construction Schedules: Construction schedules shall include a graphic network diagram and computerized construction schedule reports as required below for status reporting.

C. Networks: The CPM network shall be in a form of a time scaled "i-j" activity-on-arrow or precedence type diagram and may be divided into a number of separate sheets with suitable match lines relating the interface points among the sheets. Individual sheets shall not exceed 36 inches by 60 inches.

D. Construction and procurement activities shall be presented in a time-scaled format with a calendar time line along the entire sheet length. Each activity arrow or node shall be plotted so that the beginning and completion dates of each activity are accurately represented along the calendar time line. All activities shall use symbols that clearly distinguish between critical path activities, non-critical activities, and free float for each non-critical activity. All activity items shall be identified by their respective activity number, responsibility code, work duration, and their dollar value. All non-critical path activities shall show total float time in scale form by utilizing a dotted line or some other graphical means.

E. Duration Estimates: The duration estimate for each activity shall be computed in working days and shall represent the single best estimate considering the scope of the work and resources planned for the activity. Except for certain non-labor activities, such as curing of concrete or delivery of materials, activity duration shall not exceed 10working days nor be less than one working day unless otherwise accepted by the ENGINEER.

F. Float Time

1. Definition: Unless otherwise provided herein, float is synonymous with total float. Total float is the period of time measured by the number of working days each noncritical path activity may be delayed before it and its succeeding activities become part of the critical path. If a non-critical path activity is delayed beyond its float period, then that activity becomes part of the critical path and controls the end date cause delay to the project itself.

2. Float Ownership: Neither the OWNER nor the CONTRACTOR owns the float time. The project owns the float time. As such, liability for delay of the project completion date rests with the party actually causing delay to the project completion date. For example, if Party A uses some, but not all of the float time and Party B later uses the remainder of the float time as well as additional time beyond the float time, Party B shall be liable for the costs associated with the time that represents a delay to the project's completion date. Party A would not be responsible for any costs since it did not consume all of the float time and additional float time remained, therefore, the project's completion date was unaffected.

1.06. SCHEDULE REPORT FORMAT

A. Schedule Reports: Schedule Reports shall be prepared based on the CPM Schedule, and shall include the following minimum data for each activity:

1. Estimated activity duration.
2. Activity description.
3. Activity's percent completion.
4. Early start date (calendar dated).
5. Early finish date (calendar dated).
6. Late start date (calendar dated).
7. Late finish date (calendar dated).
8. Status (whether critical).
9. Total float for each activity.
10. Free float for each activity.

B. Project Information: Each Schedule Report shall be prefaced with the following summary data:

1. Project name.
2. Contractor.
3. Type of tabulation.
4. Project duration.
5. Contract Times (revised to reflect time extensions by Change Order).
6. The commencement date stated in the Notice to Proceed.
7. The data date and plot date of the CPM Schedule.
8. If an update, cite the new schedule completion date.

1.07. PROJECT STATUS REPORTING

A. The CONTRACTOR shall furnish monthly project status reports (Overview Bar Chart and a written narrative report) in conjunction with the revised CPM Schedules as indicated above. Status reporting shall be in the form below.

B. The CONTRACTOR shall prepare and submit monthly an Overview Bar Chart schedule of the major project components. The overview bar chart schedule shall be a summary of the current CPM Schedule (original and as updated and adjusted throughout the entire construction period). It shall be limited to not more than four sheets which shall not exceed 36 inches by 60 inches. The major project components shall be represented as time bars which shall be subdivided into various types of work including demolition, excavation and earthwork, yard piping, concrete construction, mechanical, electrical and instrumentation installations. Major components shall include each new structure by area designation, site work, modifications to existing structures, tie-ins to existing facilities, and plant startups.

C. Each major component and subdivision shall be accurately plotted consistent with the project overview bar chart above. It shall represent the same status indicated by early start and finish activity information contained in the latest update of the CPM Schedule. In addition, a percent completion shall be indicated for each major component and subdivision. The initial submittal of the overview bar chart schedule shall be made at the time that the revised original CPM Schedule is submitted to the ENGINEER (65 days from the commencement date stated in the Notice to Proceed). The CONTRACTOR shall amend the overview schedule to include any additional detail required by the ENGINEER. The CONTRACTOR shall include any additional information requested by the ENGINEER at any time during the construction of the WORK.

D. The CONTRACTOR shall prepare monthly written narrative reports of the status of the project for submission to the ENGINEER. Written status reports shall include:

1. The status of major project components (percent complete, amount of time ahead or behind schedule) and an explanation of how the project will be brought back on schedule if delays have occurred.
2. The progress made on critical activities indicated on the CPM Schedule.
3. Explanations for any lack of work on critical path activities planned to be performed during the last month.

4. Explanations for any schedule changes, including changes to the logic or to activity durations.
5. A list of the critical activities scheduled to be performed in the next two month period.
6. The status of major material and equipment procurement.
7. The value of materials and equipment properly stored at the Site but not yet incorporated into the WORK.
8. Any delays encountered during the reporting period.
9. An assessment of inclement weather delays and impacts to the progress of the WORK.

E. The CONTRACTOR may include any other information pertinent to the status of the project. The CONTRACTOR shall include additional status information requested by the ENGINEER.

1.08. INCLEMENT WEATHER PROVISIONS OF THE SCHEDULE

A. The CONTRACTOR'S construction schedule shall include at least the number of days of delay due to unusually severe weather as listed in the Contract Documents.

PART 2 - PRODUCTS (NOT USED)

PART 3 - EXECUTION (NOT USED)

END OF SECTION

THIS PAGE INTENTIONALLY LEFT BLANK

SECTION 01370

SCHEDULE OF VALUES

PART 1 - GENERAL

1.01. REQUIREMENTS INCLUDED

A. For all Lump Sum pay items, submit a Schedule of Values allocated to the various portions of the work, within 21 days after the effective date of the Agreement.

B. Upon request of the Engineer, support the values with data which will substantiate their correctness.

C. The accepted Schedule of Values shall be used only as the basis for the Contractor's Applications for Payment.

1.02. FORM AND CONTENT OF SCHEDULE OF VALUES

A. Type schedule on an 8-1/2-in by 11-in or 8-1/2-in by 14-in white paper furnished by the Owner; Contractor's standard forms and automated printout will be considered for approval by the Engineer upon Contractor's request. Identify schedule with:

1. Title of Project and location.

2. Engineer and Project number.

3. Name and Address of Contractor.

4. Contract designation.

5. Date of submission.

B. Schedule shall list the installed value of the component parts of the work in sufficient detail to serve as a basis for computing values for progress payments during construction.

C. Identify each line item with the number and title of the respective Section.

D. For each major line item list sub-values of major products or operations under the item.

E. For the various portions of the work:

1. Each item shall include a directly proportional amount of the Contractor's overhead and profit.

2. For items on which progress payments will be requested for stored materials, break down the value into:

a. The cost of the materials, delivered and unloaded, with taxes paid. Paid invoices are required for materials upon request by the Engineer.

b. The total installed value.

F. The sum of all values listed in the schedule shall equal the total Contract Sum.

1.03. SUBSCHEDULE OF UNIT MATERIAL VALUES

A. Submit a sub-schedule of unit costs and quantities for:

1. Products on which progress payments will be requested for stored products.

B. The form of submittal shall parallel that of the Schedule of Values, with each item identified the same as the line item in the Schedule of Values.

C. The unit quantity for bulk materials shall include an allowance for normal waste.

D. The unit values for the materials shall be broken down into:

1. Cost of the material, delivered and unloaded at the site, with taxes paid.

2. Copies of invoices for component material shall be included with the payment request in which the material first appears.

3. Paid invoices shall be provided with the second payment request in which the material appears or no payment shall be allowed and/or may be deleted from the request.

E. The installed unit value multiplied by the quantity listed shall equal the cost of that item in the Schedule of Values.

PART 2 - PRODUCTS (NOT USED)

PART 3 - EXECUTION (NOT USED)

END OF SECTION

SECTION 01410

TESTING LABORATORY SERVICES

PART 1 - GENERAL

1.01. SCOPE

A. This Section includes all testing required to verify work performed by the Contractor is in accordance with the requirements of the, Contract Documents, and also includes testing the Owner may require, beyond that testing required of the manufacturer, to determine if materials provided for the Project meet the requirements of the Contract Documents.

B. The testing laboratory or laboratories will be selected by the Contractor from the St. Tammany Parish list of approved Testing laboratories.

C. Vibration monitoring will be required for all pile driving, including sheet piling for cofferdams.

1.02. RELATED WORK

A. Section 02160 – Sheeting, Shoring and Bracing

B. Section 02200 – Earthwork

C. Section 02800 – Sewers and Appurtenances

D. Section 03300 – Cast in Place Concrete

1.03. PAYMENT FOR TESTING SERVICES

A. The cost of testing services required by the Contract Documents will be paid for directly by the Contractor. The cost of additional testing services not specifically required but requested by the Owner or Engineer, will be paid for directly by the Contractor.

B. The cost of material testing described in various sections of these Specifications and as required in referenced standards to be provided by a material manufacturer, shall be included in the Contractor’s Bid.

C. The cost of retesting any item that fails to meet the requirements of the Contract Documents shall be paid for by the Contractor. Retesting will be performed by the testing laboratory working for the Owner.

D. Inspections and tests required by codes or ordinances or by a plan approval authority, and made by a legally constituted authority, shall be the responsibility of, and shall be paid for by the Contractor, unless otherwise provided in the Contract Documents.

E. Inspection or testing performed exclusively for the Contractor's convenience shall be the sole responsibility of the Contractor.

1.04. LABORATORY DUTIES

A. Cooperate with the Owner, Engineer and Contractor.

B. Provide qualified personnel promptly on notice.

C. Perform specified inspections, sampling and testing of materials, as required.

1. Comply with specified standards, ASTM, other recognized authorities, and as specified.

2. Ascertain compliance with requirements of the Contract Documents.

D. Promptly notify the Engineer and Contractor of irregularity or deficiency of work which are observed during performance of services.

E. Promptly submit sufficient copies to the Engineer and to the Contractor of all reports of inspections and tests with the following information included:

1. Date issued

2. Project title and number

3. Testing laboratory name and address

4. Name and signature of inspector

5. Date of inspection or sampling

6. Record of temperature and weather

7. Date of test

8. Identification of product and Specification section

9. Location of Project

10. Type of inspection or test

11. Results of test

12. Observations regarding compliance with the Contract Documents

F. Transporting all samples to the testing laboratory.

G. The laboratory is not authorized to release, revoke, alter or enlarge on requirements of the Contract Documents, or approve or accept any portion of the work.

1.05. Contractor Responsibilities

A. The Contractor shall cooperate with laboratory personnel, provide access to the work, and provide manufacturer's requirements.

B. The Contractor shall provide to the laboratory, representative samples, in required quantities, of materials to be tested.

C. The Contractor shall furnish required labor, equipment, and facilities to:

1. Provide access to work to be tested;

2. Obtain and handle samples at the site;

3. Facilitate inspections and tests;

4. Build or furnish a holding box for concrete cylinders or other samples as required by the laboratory.

D. The Contractor shall notify the laboratory sufficiently in advance of operation to allow for the assignment of personnel and schedules of tests.

E. Copies of all correspondence between the Contractor and testing agencies shall be provided to the Engineer.

F. No temporary or permanent piling shall be driven without vibration monitoring equipment and personnel on site.

1.06. Quality Assurance

A. Testing shall be in accordance with all pertinent codes and regulations and with procedures and requirements of the American Society for Testing and Materials (ASTM).

1.07. Schedules for Testing

A. Establishing Schedule

1. The Contractor shall, by advance discussion with the testing laboratory selected by the Owner, determine the time required for the laboratory to perform its tests and to issue each of its findings, and make all arrangements for the testing laboratory to be on site to provide the required testing.

2. The Contractor shall provide all required time for testing within the construction schedule.

B. When changes of construction schedule are necessary during construction, the Contractor shall coordinate all such changes of schedule with the testing laboratory as required.

C. When the testing laboratory is ready to test according to the determined schedule, but is prevented from testing or taking specimens due to incompleteness of the work, all extra costs for testing attributable to the delay will be paid by the Contractor.

END OF SECTION 01410

THIS PAGE LEFT BLANK INTENTIONALLY

SECTION 01500

TEMPORARY FACILITIES

PART 1 - GENERAL

1.01. DESCRIPTION OF REQUIREMENTS:

A. Definitions: Specific administrative and procedural minimum actions are specified in this section, as extensions of provisions in General Conditions and other Contract Documents. These requirements have been included for special purposes as indicated. Nothing in this section is intended to limit types and amounts of temporary work required, and no omission from this section will be recognized as an indication by Engineer that such temporary activity is not required for successful completion of the work and compliance with requirements of Contract Documents. Provisions of this section are applicable to, but not by way of limitation utility services, construction facilities, security/protection provisions, and support facilities.

1.02. QUALITY ASSURANCE:

A. General: In addition to compliance with governing regulations and rules/recommendations of franchised utility companies, comply with specific requirements indicated and with applicable local industry standards for construction work (published recommendations by local consensus "building councils").

B. ANSI Standards: Comply with applicable provisions of ANSI A10-Series standards on construction safety, including A10.3, A10.4, A10.5, A10.6, A10.7, A10.8, A10.9, A10.10, A10.11, A10.12, A10.13, A10.14, A10.15, A10.17, A10.18, A10.20 and A10.22.

C. NFPA Code: Comply with NFPA Code 241 "Building Construction and Demolition Operations".

D. Conservation: In compliance with Owner's policy on energy/materials conservation, install and operate temporary facilities and perform construction activities in manner which reasonably will be conservative and avoid waste of energy and materials including water.

1.03. JOB CONDITIONS:

A. General: Establish and initiate use of each temporary facility at time first reasonably required for proper performance of the work. Terminate use and remove facilities at earliest reasonable time, when no longer needed or when permanent facilities have, with authorized use, replaced the need.

B. Conditions of Use: Install, operate, maintain and protect temporary facilities in a manner and at locations which will be safe, non-hazardous, sanitary and protective of persons and property, and free of deleterious effects.

PART 2 - PRODUCTS

2.01. TEMPORARY UTILITY SERVICES:

A. The types of services required include, but not by way of limitation, water, sewerage, surface drainage, electrical power and telephones. Where possible and reasonable, connect to existing franchised utilities for required services; and comply with service companies' recommendations on materials and methods, or engage service companies to install services. Locate and relocate services (as necessary) to minimize interference with construction operations.

B. Potable Water: Contractor to provide potable water as needed via tank truck.

C. Temporary Power Service: Provide service with ground-fault circuit interrupter features, activated from each circuit of 20-amp or less rating.

D. Metering: Provide meters for water and electrical power services, if required by local utility companies. Coordinate with utility companies.

2.02. TEMPORARY CONSTRUCTION FACILITIES:

A. The types of temporary construction facilities required, include, but not by way of limitation, water distribution, drainage, erosion control, dewatering equipment, enclosure of work, lighting (when required by night time activities), dust or noise partition, seeding and roads. Provide facilities reasonably required to perform construction operations properly and adequately.

1. Supply power for electrical welding, if any, from either temporary power distribution system or by engine-driven power generator sets, at Contractor's option.

B. Access Provisions: Provide temporary access elements as reasonably required to perform the work and facilitate its inspection during installation. Comply with reasonable requests of governing authorities performing inspections.

2.03. SECURITY/PROTECTION PROVISIONS:

A. The types of temporary security and protection provisions required include, but not by way of limitation, fire protection, barricades, warning signs/lights, wire site enclosure fence, environmental protection, and similar provisions intended to minimize property losses, personal injuries and claims for damages at project site.

B. Fire and Windstorm Protection: Take the following precautions to protect the project against fire and windstorm damage during construction.

1. Provide adequate portable fire extinguisher equipment for all areas of storage, construction, temporary enclosures and construction offices.

2. All temporary contractor's offices, storage sheds, workmen's shanties, etc., shall be located outside of, and well detached from, the area under construction.

3. Only flame-proofed tarpaulins shall be used.

4. Insulation materials required for the curing of concrete shall be noncombustible.

5. No "on-site" incineration shall be permitted.

6. All concrete forms shall be adequately fastened in place.

7. All construction materials shall be adequately protected against wind damage during storage.

2.04. TEMPORARY SUPPORT FACILITIES:

A. The types of temporary support facilities required include, but not by way of limitation, sanitary facilities, drinking water, first aid facilities, bulletin board, thermometer, waste disposal service, all as may be reasonably required for proficient performance of the work and accommodation of personnel at the site including Owner's and Engineer's personnel. Discontinue and remove temporary support facilities, and make incidental similar use of

permanent work of the project, only when and in manner authorized by Engineer; and, if not otherwise indicated, immediately before time of substantial completion. Locate temporary support facilities for convenience of users, and for minimum interference with construction activities.

B. Sanitary Facilities: At Contractor's option, provide either piped (wet) toilet facilities or self-contained toilet units of type acceptable to governing authorities, adequate (at all stages of construction) for use of personnel at project site. Provide separate facilities for male and female personnel when both sexes are working (in any capacity) at project site. Provide piped (wet) wash facilities; except, during time when only earthwork and foundation work are in progress, wash facilities may be limited to wet-type paper and hand towels.

C. Drinking Water: Provide dispenser-type or electrical-power-cooled drinking water units; either piped with potable water or supplied with bottled water; adequate in number and locations for personnel at project site. Furnish paper cups and waste receptacles.

PART 3 - EXECUTION (NOT USED)

END OF SECTION 01500

THIS PAGE LEFT BLANK INTENTIONALLY

SECTION 01705

PROJECT CLOSEOUT

PART 1 - GENERAL

1.01. DESCRIPTION OF REQUIREMENTS:

A. Definitions: Closeout is hereby defined to include general requirements near end of contract time, in preparation for final acceptance, final payment, normal termination of contract, occupancy by Owner and similar actions evidencing completion of the work. Specific requirements for individual units of work are specified in sections of Division 2 through 16. Time of closeout is directly related to "Substantial Completion", and therefore may be either a single time period for entire work or a series of time periods for individual parts of the work which have been certified as substantially complete at different dates. That time variation (if any) shall be acceptable to other provisions of this section.

1.02. PREREQUISITES TO SUBSTANTIAL COMPLETION:

A. General: Prior to requesting Engineer's inspection for certification of substantial completion (for entire work or portions thereof), complete the following and list known exceptions in request:

1. In progress payment request, coincident with or first following date claimed, show either 100% completion for portion of work claimed as "substantially complete", or list incomplete items, value of incompletion, and reason for being incomplete.

2. Include supporting documentation for completion as indicated in these contract documents.

3. Submit statement showing accounting of changes to contract sum.

4. Advise Owner of pending insurance change-over requirements (where applicable).

5. Obtain and submit releases enabling Owner's full and unrestricted use of the work and access to services and utilities, including (where required) occupancy permits, operating certificates, and similar releases.

6. Touch-up and otherwise repair and restore marred exposed finishes.

B. Inspection Procedures: Upon receipt of Contractor's request, Engineer will either proceed with inspection or advise Contractor of prerequisites not fulfilled. Following initial inspection, Engineer will either prepare certificate of substantial completion or advise Contractor of work which must be performed prior to issuance of certificate; and repair inspection when requested and assured that work has been substantially completed. Results of completed inspection will form initial "punch list" for final acceptance.

1.03. PREREQUISITES TO FINAL ACCEPTANCE:

A. General: Prior to requesting Engineer's final inspection for certification of final acceptance and final payment, as required by General Conditions, complete the following and list known exceptions (if any) in request:

1. Submit final payment request with final releases and supporting documentation not previously submitted and accepted. Include certificates of insurance for products and completed operations where required.

2. Submit updated final statement, accounting for additional (final) changes to contract sum.

3. Submit copy of Engineer's final punch list of itemized work to be completed or corrected, stating that each item has been completed or otherwise resolved for acceptance, endorsed and dated by Engineer.

4. Submit consent of surety.

5. Revise and submit evidence of final continuing insurance coverage complying with insurance requirements.

B. Reinspection Procedure: Upon receipt of Contractor's notice that the work has been complete, including punch-list items resulting from earlier inspections, and excepting incomplete items delayed because of acceptable circumstances, Engineer will reinspect the work. Upon completion of reinspection Engineer will either prepare certificate of final acceptance or advise Contractor of work not completed or obligations not fulfilled as required for final acceptance. If necessary, procedure will be repeated.

PART 2 - PRODUCTS (NOT USED)

PART 3 - EXECUTION

3.01. FINAL CLEANING:

A. General: Special cleaning for specific units of work is specified in sections of Division 2 through 16. General cleaning during progress of work is specified in General Conditions and as temporary services in "Temporary Facilities" section of this Division. Provide final cleaning of the work, at time indicated, consisting of cleaning each surface or unit of work to normal "clean" condition expected for a first-class building cleaning and maintenance program. Comply with manufacturer's instructions for cleaning operations. The following are examples, but not by way of limitation, of cleaning levels required:

1. Clean pavement in areas of construction broom clean.

2. Clean project site, including adjacent development areas, of litter and foreign substances. Sweep paved areas to a broom clean condition; remove stains, petrochemical spills and other foreign deposits.

B. Removal of Protection: Except as otherwise indicated or requested by Owner, remove temporary protection devices and facilities which were installed during course of the work to protect previously completed work during remainder of construction period.

C. Compliances: Comply with safety standards and governing regulations for cleaning operations. Do not burn waste materials at site, or bury debris or excess materials on Owner's property, or discharge volatile or other harmful or dangerous materials into drainage systems; remove waste materials from site and dispose of in a lawful manner.

1. Where extra materials of value remaining after completion of associated work have become Owner's property, dispose of these to Owner's best advantage as directed by Owner.

3.02. PROJECT RECORD DOCUMENTS:

A. Record Drawings: See Specification Section 01720 – Project Record Documents for requirements.

END OF SECTION 01705

SECTION 01710

CLEANING

PART 1 - GENERAL

1.01. SCOPE OF WORK

A. Cleaning shall include daily "policing" of the work and surrounding areas to clear general debris, waste paper, wood scraps, steel scraps, and other objectionable material along with the final cleanup of site(s) required for project acceptance.

1.02. DISPOSAL AND CLEANING

A. Conduct cleaning and disposal operations to comply with codes, ordinances, regulations and anti-pollution laws.

PART 2 - PRODUCTS

2.01. MATERIALS

A. Use only those cleaning materials which will not create hazards to health or property and which will not damage surfaces.

B. Use only those cleaning materials and methods recommended by manufacturer of the surface material to be cleaned.

C. Use cleaning materials only on surfaces recommended by cleaning material manufacturer.

PART 3 - EXECUTION

3.01. DURING CONSTRUCTION

A. Execute periodic cleaning to keep the work, the site and adjacent properties free from accumulations of waste materials, rubbish and windblown debris, resulting from construction operations.

B. Provide on-site containers for the collection of waste materials, debris and rubbish. Dispose of all waste material daily including containers, food debris, and other miscellaneous materials in on-site containers and/or remove from the site.

C. Remove waste materials, debris and rubbish from the site periodically and dispose of at legal disposal areas away from the site.

3.02. FINAL CLEANING

A. Remove all waste materials, debris and rubbish from the project site and dispose of at legal disposal areas away from the site.

B. Remove all tools, temporary facilities, traffic control devices, project signs, and equipment from the project site

C. Broom clean exterior paved surfaces; rake clean other surfaces of the grounds and dispose of all debris resulting from cleaning at legal disposal areas away from the site.

D. Repair any damage to landscaping within the project limits and adjacent property resulting from the work to original or better condition as determined by the Engineer.

END OF SECTION 01710

SECTION 01720

PROJECT RECORD DOCUMENTS

PART 1 - GENERAL

1.01. SCOPE OF WORK

A. Maintain one (1) record copy of the following documents at the site for the Owner's use:

1. Conformed Drawings.

2. Conformed Specifications.

3. Duly issued and approved addenda.

4. Duly issued and approved Change Orders and other modifications to the Contract.

5. Engineer's Field Change Orders and other written instructions.

6. Duly processed Requests for Information and documentation.

7. Approved Shop Drawings, Working Drawings and Samples.

8. Field Test Reports.

9. Construction Photographs.

10. Latest approved progress schedule.

B. The Owner will not approve progress payments unless Project Record Documents are current with construction progress.

1.02. SUBMITTALS

A. See Section 01300 – Submittals, for submittal procedures.

B. At contract closeout, deliver the Record Documents to the Engineer for the Owner. The Record Documents shall generally consist of redlined drawings, specifications, and other information as necessary to accurately represent the completed work. The contractor shall also provide electronic copies of all Record Documents in Professional Document Format (pdf).

C. Label all document containers and boxes clearly to indicate their content.

D. Accompany submittals with a transmittal letter in duplicate, containing the following:

1. Date.

2. Project Title and Project Number.

3. Contractor's name and address.

4. Title and number of each Record Document.

5. Signatures of the Contractor or his authorized representative certifying that the submittal is complete and as required by the contract documents.

E. The Owner will not grant Final Acceptance to the project until the Record Documents have been turned over to and approved by the Engineer.

F. Owner reserves the right to withhold retainage fees until after the acceptable Record Documents have been submitted and approved by the Engineer.

PART 2 - PRODUCTS

2.01. MARKING DEVICES

A. Provide waterproof felt tip pens as required to maintain as-built drawings described in this section using the following color coding:

1. Red: Document changes.

2. Yellow: Work installed without change.

3. Orange: Dimensional and other notations.

4. Green: Work deleted.

2.02. ELECTRONIC MEDIA DRAWINGS

A. Provide drawings, details and schematics from approved submittals in electronic form per 3.02.D.

B. All drawings provided in electronic format shall be provided on compact disk (CD) or DVD in Portable Document Format (.pdf) with borders and title blocks clearly identifying Contract, equipment, and the scope of the drawing.

C. Drawing quality and size of presentation shall be legible at a 50-percent (50%) reduction of such drawings, and reduced drawings will be used for insertion in Operations and Maintenance manuals.

2.03. PROJECT LAYOUT EQUIPMENT

A. The Contractor shall have the capability of laying out the Work and recording information for the Record Documents using a survey coordinate system established by the Engineer. Layout and recording as-builts shall be accomplished using total station or global positioning system (GPS) equipment.

PART 3 - EXECUTION

3.01. MAINTENANCE OF DOCUMENTS AND SAMPLES

A. Store documents and samples in the Contractor’s field office apart from documents used for construction.

1. Provide files and racks for the storage of documents.

2. Provide locked cabinet or secure storage space for the storage of samples.

B. File documents and samples in accordance with CSI format.

C. Maintain documents in a clean, dry, legible condition, and in good order. Do not use Record Documents for construction purposes.

D. Make documents and samples available at all times for the inspection by the Engineer.

E. As a prerequisite for monthly progress payments, the Contractor shall exhibit the currently updated “record documents” for the review of the Engineer and Owner. The failure of the Engineer and/or Owner to review the documents shall not relieve the Contractor of the responsibility of their being available and up-to-date.

3.02. RECORDING

A. Label each document and sample “PROJECT RECORD” with a rubber stamp.

B. Record information monthly and concurrently with construction progress. Do not conceal any work until the required information is recorded.

C. Drawings (hard copies): Legibly mark on full-size drawings to record actual construction noting any variation in materials, equipment, conditions and dimensions for the following:

1. Elevations of various structure elements in relation to elevation datum.

   a. Elevations referenced to control points established by the Engineer.

   b. Elevations of all structural finished floors and tops of concrete.

   c. Elevations of all weirs and other flow control devices.

   d. Bottom of pipe (B/P) or top of pipe (T/P) elevations for all exposed piping, indoors or outdoors.

2. All underground piping with elevations and dimensions, changes to piping location, horizontal and vertical locations of underground utilities and appurtenances, reference to permanent surface improvements, actual installed pipe material, class, etc.

   a. Top of pipe or top of concrete (TOC) elevations for all underground pipelines or encased pipes or conduits exposed during construction, whether installed or not. On straight runs of new pipe or conduit, record at least one (1) T/P elevation every 100 feet of pipe or conduit.

   b. Coordinates and elevations of site piping, electrical conduits and ductbanks, including starting and ending points and directional changes. Record the horizontal location of every piping or conduit bend (vertical or horizontal), valves, other fittings, or specialty item exposed during construction, whether installed or not. On long, straight runs of pipe or conduit, record similar information between bends and other fittings at least once every 200 feet.

   c. Locate all underground utilities, structures, obstacles, etc. encountered during construction, whether being installed or not, in the manner indicated above for underground pipes and conduits.

3. All embedded, buried and concealed features of mechanical piping, site piping, electrical conduit, and structural embedments with elevations and dimensions. Reference to a permanent surface improvement or visible feature all changes to horizontal and vertical locations of pipe, fittings, underground utilities and appurtenances. Note actual installed pipe materials, class, etc.

4. Depth of foundation elements in relation to ground elevation.

5. Field changes of dimensions and details.

6. Changes made by Field Change Order or by Change Order.

7. Details not on the original Contract documents.
8. Equipment and piping locations.

9. Identify the actual motor installed by manufacturer's name, nameplate horsepower, and serial number.

10. Identify the actual pump installed by manufacturer's name, model number, impeller size, rated capacity, and serial number.

11. Major architectural and structural changes, including relocation of doors, windows, etc.

D. Electronic Drawings, Details and Schedules: Provide electronic media copies and original plots on 11-in. x 17-in. bond paper information prepared by the Contractor for construction or installation that is supplemental to the detail on the Contract Drawings and as required in specific specifications. Reference appropriate Contract Drawings that show the work. Drawings shall be in electronic format for the following:

1. All electrical and instrumentation drawings required to perform and document the work and/or additional information specified elsewhere.

2. All schematics of internal wiring of supplied equipment. Provide electronic drawings of all internal wiring of supplied equipment; utilize the equipment supplier's drawings when preparing as-built schematic drawings for connection of said equipment.

3. Interconnection diagrams for each cable, scheduled or unscheduled, in the contract document. Prepare schematic diagrams for each control circuit. Diagrams included in the Contract Documents may be used for preparing final as-builts. All additional information such as cable number, wire numbers, terminal numbers, wire colors, and pair numbers shall be added electronically by the Contractor and submitted.

4. Schedules for conduit, cables, electrical power, lighting, panels, and other as also may be specified in individual sections. Provide conduit and cable schedules listing actual conduit sizes and routing along with the actual cables carried in each, based on field cable pulling records. Include equipment number and pertinent data, specification number, manufacturer and catalog number, local vendor or manufacturer's representative with address and phone number, warranty number and dates, spare parts recommended and/or provided, and installation date.

5. Contractor or supplier prepared fire protection sprinkler and alarm systems and other alarm systems accurately showing the location, size and arrangement of piping, cable appurtenances and controls.

6. Field changes of dimensions and details.

7. Changes made by Field Change Order or by Change Order.

8. Other information as required in the Specifications.

E. Specifications and Addenda: Legibly mark each Section to record the following:

1. Manufacturer, trade name, catalog number, and supplier of each product and time of equipment actually installed.

2. Changes made by Field Change Order or by Change Order.

F. Shop Drawings: After final review and approval of shop drawings, provide the following:

1. One (1) set of Engineer approved shop drawings or submittals for each piece of equipment, piping, electrical system, and instrumentation system.

3.03. DELIVERY OF PROJECT RECORD DOCUMENTS

A. Record documents will be used to verify and document progress as stated in progress payment request. Work not included in the record drawings will not be included for payment in progress payment requests.

B. Prior to the Contractor's request for a notice of Substantial Completion of any area or system on the project, the Contractor shall transmit Record Documents to the Engineer. The record documents shall include a statement indicating completion of record information for specific areas or, if for project closeout, that the documentation is completed and in compliance with Contract requirements.

C. Revise record documents as a result of any changes made or discovered during project closeout and/or commissioning.

END OF SECTION 01720

THIS PAGE LEFT BLANK INTENTIONALLY

SECTION 01783

WARRANTIES AND BONDS

PART 1 - GENERAL

1.01. SCOPE OF WORK

A. This Section specifies general administrative and procedural requirements for warranties and bonds required by the Contract Documents, including manufacturer's standard warranties on products and special warranties.

B. For all major pieces of equipment, submit a warranty from the equipment manufacturer. The manufacturer's warranty period shall be concurrent with the Contractor's for one (1) year, unless otherwise specified, commencing on the date established and accepted by the Owner as substantial completion.

C. The Contractor shall be responsible for obtaining certificates for equipment warranty for all major equipment specified under Divisions 2 through 16. The Engineer reserves the right to request warranties for equipment not classified as major. The Contractor shall still warrant all materials and equipment in the Contractor's one-year warranty period even though certificates of warranty may not be specifically required.

D. In the event that the equipment manufacturer or supplier is unwilling to provide a one-year warranty commencing at the time of Owner acceptance, the Contractor shall obtain from the manufacturer a two (2) year warranty commencing at the time of equipment delivery to the job site. This two-year warranty from the manufacturer shall not relieve the Contractor of the one-year warranty starting at the Owner accepted date of substantial completion. Equipment not in operation at or accepted for operation at the date of substantial completion shall have a warranty from the date of final acceptance by the Owner.

1.02. DEFINITIONS

A. Standard Product Warranties: Preprinted written warranties published by individual manufacturers for particular products that are specifically endorsed by the manufacturer to the Owner.

B. Special Warranties: Written warranties required by or incorporated in the Contract Documents, either to extend time limits provided by standard warranties or to provide greater rights for the Owner.

1.03. SUBMITTALS

A. Submit written warranties to the Owner prior to the date fixed by the Engineer for Substantial Completion. If the Certificate of Substantial Completion designates a commencement date for warranties other than the date of Substantial Completion for the Work, or a designated portion of the Work, submit written warranties upon request of the Owner.

B. When a designated portion of the Work is completed and occupied or used by the Owner, by separate agreement with the Contractor during the construction period, submit properly executed warranties to the Owner within fifteen (15) days of completion of that designated portion of the Work.

C. When a special warranty is required to be executed by the Contractor, or the Contractor and a subcontractor, supplier or manufacturer, prepare a written document that contains appropriate

terms and identification, ready for execution by the required parties. Submit a draft to the Owner for approval prior to final execution.

D. Refer to individual Sections of Divisions 2 through 16 for specific content requirements, and particular requirements for submittal of special warranties.

E. At Final Completion, compile two (2) copies of each required warranty and bond properly executed by the Contractor, or by the Contractor, subcontractor, supplier, or manufacturer. Organize the warranty documents into an orderly sequence based on the table of contents of the Project Manual.

F. Bind warranties and bonds in heavy-duty, commercial quality, durable 3-ring clear plastic covered loose-leaf binders, thickness as necessary to accommodate contents and sized to receive 8½-in. by 11-in. paper.

G. Cover: Identify each binder with typed or printed title “WARRANTIES AND BONDS.” List the Title of the project and names of the Owner, Contractor and Engineer.

H. Table of Contents: Neatly typed, in the sequence of the Table of Contents of the Project Manual, with each item identified with the number and title of the Section in which specified and the name of the product or work item.

I. Provide heavy paper dividers with celluloid covered tabs for each separate warranty. Mark the tab to identify the product or installation. Provide a typed description of the product or installation, including the name of the product and the name, address and telephone number of the installer, supplier and manufacturer.

J. When operating and maintenance manuals are required for warranted construction, provide additional copies of each required warranty, as necessary, for inclusion in each required manual.

PART 2 - PRODUCTS (NOT USED)

PART 3 - EXECUTION

3.01. WARRANTY REQUIREMENTS

A. Related Damages and Losses: When correcting warranted work that has failed, remove and replace other work that has been damaged as a result of such failure or that must be removed and replaced to provide access for correction of warranted work.

B. Reinstatement of Warranty: When work covered by a warranty has failed and been corrected by replacement or rebuilding, reinstate the warranty by written endorsement. The reinstated warranty shall be equal to the original warranty with an equitable adjustment for depreciation.

C. Replacement Cost: Upon determination that work covered by a warranty has failed, replace or rebuild the work to an acceptable condition complying with requirements of Contract Documents. The Contractor is responsible for the cost of replacing or rebuilding defective work regardless of whether the Owner has benefited from use of the work through a portion of its anticipated useful service life.

D. Owner's Recourse: Written warranties made to the Owner are in addition to implied warranties, and shall not limit the duties, obligations, rights and remedies otherwise available under the law, nor shall warranty periods be interpreted as limitations on time in which the Owner can enforce such other duties, obligations, rights, or remedies.

E. Rejection of Warranties: The Owner reserves the right to reject warranties and to limit selections to products with warranties not in conflict with requirements of the contract Documents.

F. The Owner reserves the right to refuse to accept work for the project where a special warranty, certification, or similar commitment is required on such work or part of the work, until evidence is presented that entities required to countersign such commitments are willing to do so.

G. Disclaimers and Limitations: Manufacturer's disclaimers and limitations on product warranties do not relieve the Contractor of the warranty on the work that incorporates the products, nor does it relieve suppliers, manufacturers and subcontractors required to countersign special warranties with the Contractor.

H. Separate Prime Contracts: Each Prime Contractor is responsible for warranties related to its own Contract.

3.02. MANUFACTURERS CERTIFICATIONS

A. Where required, the Contractor shall supply evidence, satisfactory to the Engineer, that the Contractor can obtain manufacturers' certifications as to the Contractor's installation of equipment.

END OF SECTION 01783

THIS PAGE LEFT INTENTIONALLY BLANK

SECTION 02160

SHEETING, SHORING, AND BRACING

PART 1 – GENERAL

1.01 SCOPE

A. This section shall include supplying materials, services, and labor necessary to provide sheeting, shoring, and bracing or supports as required to provide a safe working condition for Contractor's personnel and to provide for protection of utilities, buildings, and structures. It shall be the sole responsibility of the Contractor to comply with these requirements. The use of braced steel sheet pile cofferdams for construction of the lift station wet well and manholes are required.

1.02 SUBMITTALS

A. For record purposes only, three (3) copies of the design criteria and construction drawings shall be sent to the Engineer at least ten (10) days before starting work on the cofferdam. The cofferdam drawings shall fully describe the cofferdam construction and shall include all dimensions, member sizes, work areas, and methods of accommodating substructure construction. Design criteria shall include earth and water loads, allowable design stresses, loading diagrams, a complete description of dewatering methods, backfilling procedures, and the amount of cofferdam materials to be removed and the method of removal.

1.03 SAFETY REQUIREMENTS

A. All sheeting, shoring, and bracing of excavations shall conform to requirements necessary to comply with local codes and authorities having jurisdiction.

B. The contractor shall assume all responsibility for the stability and adequacy of cofferdams and dewatering systems constructed by him and all costs and damages resulting from any failure thereof.

1.04 DESIGN

A. For braced steel sheet pile cofferdams, the Contractor shall retain the services of a registered professional engineer who is experienced with soil and groundwater conditions in the project area. The engineer shall be licensed in the State of Louisiana. The engineer shall design and prepare drawings for the cofferdam. The cofferdam shall be designed to provide adequate working space, water tightness, anchorage, and stability. A suitable dewatering system shall also be designed and provided.

PART 2 – PRODUCTS (NOT USED)

PART 3 – EXECUTION

3.01 PERFORMANCE

A. The planning, installation, and removal of all sheeting, shoring, bracing, and sheet piling shall be accomplished in such a manner as to maintain the required trench or excavated cross section and to maintain the undisturbed state of the soils adjacent to the excavation and below the excavated bottom.

B. The use of horizontal strutting below the barrel of a pipe or structure, or the use of a pipe as support for pipe trench bracing will not be permitted.

C. Wood sheeting shall be left in place and the upper part of the sheeting shall be cut off three feet below the finished ground surface after backfilling. All bracing above this level shall also be removed.

D. Steel sheeting, when directed by the Engineer, shall be left in place and the upper part of sheeting shall be cut off three feet below the finished ground surface after backfilling. All bracing above this level shall be removed. The right of the Engineer to order sheeting and bracing left in place shall not be construed as creating any obligation on his part to issue such orders, and his failure to exercise his right to do so shall not relieve the Contractor from liability for damages to persons or property occurring from or upon the work occasioned by negligence or otherwise, growing out of failure on the part of the Contractor to leave in place in the excavation sufficient sheeting and bracing to prevent any caving or moving of the ground adjacent to the sides of the excavation.

E. Steel sheeting or pilings which are withdrawn shall be extracted in a manner so as to prevent subsequent settlement of the structure or produce additional loadings to the structure and to maintain the undisturbed state of the soil adjacent to the excavation or in the immediate area.

END OF SECTION 02160

SECTION 02200

EARTHWORK

PART 1 – GENERAL

1.01 SCOPE

A. This Section includes earthwork and related operations, including, but not limited to, clearing and grubbing the construction site, dewatering, excavating all classes of material encountered, pumping, draining and handling of water encountered in the excavations, handling, storage, transportation and disposal of all excavated and unsuitable material, construction of fills and embankments, backfilling around structures and pipe, backfilling all trenches and pits, compacting, preparation of subgrades, surfacing and grading, and any other similar, incidental, or appurtenant earthwork operation which may be necessary to properly complete the work.

B. The Contactor shall provide all services, labor, materials and equipment required for all earthwork and related operations necessary or convenient to the Contractor for furnishing complete work as shown on the Drawings or specified in these Contract Documents.

1.02 GENERAL

A. The elevations shown on the Drawings as existing are taken from the best existing data and are intended to give reasonably accurate information about the existing elevations. They are not precise and the Contractor shall become satisfied as to the exact quantities of excavation and fill required.

B. Earthwork operations shall be performed in a safe and proper manner with appropriate precautions being taken against all hazards.

C. All excavated and filled areas for structures, trenches, fills, topsoil areas, embankments and channels shall be maintained by the Contractor in good condition at all times until final acceptance by the Owner. All damage caused by erosion or other construction operations shall be repaired by the Contractor using material of the same type as the damaged material.

D. Earthwork within the rights-of-way of State, Parish, and City agencies shall be done in accordance with requirements and provisions of the permits issued by those agencies for the construction within their respective rights-of-way. Such requirements and provisions, where applicable, shall take precedence and supersede the provisions of these Specifications.

E. The Contractor shall control grading in a manner to prevent surface water from running into excavations. Obstruction of surface drainage shall be avoided and means shall be provided whereby storm water can be uninterrupted in existing gutters, other surface drains or temporary drains. Free access must be provided to all fire hydrants, water gates and meters.

F. Excavation works shall include the removal and subsequent handling of all materials excavated or otherwise removed in performance of the work, regardless of the type, character, composition or condition thereof.

G. Tests for compaction and density shall be conducted by the Engineer or by an independent testing laboratory selected by the Engineer. Costs of compaction tests performed by an independent testing laboratory shall be paid for directly by the Owner. The Contractor shall make all necessary excavations and shall supply any samples of materials necessary for conducting compaction and density tests. The cost of all retests made necessary by the failure of materials to conform to the requirements of these Contract Documents shall be paid by the Contractor.

H. The Contractor shall comply with local regulations and with the provisions of the “Manual of Accident Prevention in Construction” of the Associated General Contractors of American Inc., Occupational Safety and Health Act, and all other applicable safety regulations.

I. It is understood and agreed that the Contractor has made a thorough investigation of the surface and subsurface conditions of the site and any special construction problems which might arise as a result of nearby watercourses and floodplains, particularly in areas where construction activities may encounter water-bearing sands and gravels or limestone solution channels. The Contractor shall be responsible for providing all services, labor, equipment and materials necessary or convenient to the Contractor for completing the work within the time specified in these Contract Documents.

PART 2 – PRODUCTS

2.01 MATERIALS AND CONSTRUCTION

A. Earthwork Materials

1. Fill Material, General

a. Approval Required: All fill material shall be subject to the approval of the Engineer.

b. Notification: For approval of imported fill material, notify the Engineer at least one week in advance of intention to import material, designate the proposed borrow area and permit the Engineer to sample as necessary from the borrow area for the purpose of making acceptance tests to prove the quality of the material.

2. On-site Fill Material: All on-site fill material shall be soil exclusive of organic matter, frozen lumps or other deleterious substances. On-site fill material shall contain no rocks or lumps over 3-inches maximum in dimension.

3. Imported Fill Materials: All imported fill material shall meet the requirements of on-site fill material.

4. Sand Cushions and Sand Fill: Sand cushions and sand fill shall consist of a sand-gravel fill of such gradation that 100 percent will pass a 3/8-inch sieve and not more than 10 percent by weight is lost by washing.

5. Coarse Aggregate: Coarse aggregate shall conform to the Louisiana Department of Transportation Standard Specifications for Roads and Bridges, Section 1003.02(b).

6. Fine Aggregate: All fine aggregate shall conform to the Louisiana Department of Transportation Standard Specifications for Roads and Bridges, Section 1003.02(a).

7. Pea Gravel: Pea gravel shall be clean, naturally rounded aggregate, 1/8 to 3/4-inch in diameter per ASTM C 33.

8. Top Soil: Dark organic weed free loam, free of muck.

B. Geotextile Fabric

1. Nonwoven: Composed of at least 85% by weight of polyolefins, polyesters, or polyamides; and with the following minimum properties determined according to ASTM D 4759 and referenced standard test methods:

a. Grab Tensile Strength: 110 lb; ASTM D 4632.

b. Tear Strength: 40 lb.; ASTM D 4533.

c. Puncture Resistance: 50 lb.; ASTM D 4833.

d. Water Flow Rate: 150 gpm per sq. ft.; ASTM D 4491.

e. Apparent Opening Size: No. 50; ASTM D 4751.

2. Woven: Composed of at least 85% by weight of polyolefins, polyesters, or polyamides and with the following minimum properties determined according to ASTM D 4759 and referenced standard test methods:

a. Grab Tensile Strength: 200 lb; ASTM D 4632.

b. Tear Strength: 75 lb; ASTM D 4533.

c. Puncture Resistance: 90 lb; ASTM D 4833.

d. Water Flow Rate: 4 gpm per sq. ft.; ASTM D 4491.

e. Apparent Opening Size: No. 30; ASTM D 4751.

C. Other Materials: All other materials not specifically described but required for proper completion of the work of this Section shall be as selected by the Contractor subject to the approval of the Engineer.

PART 3 – EXECUTION

3.01 GENERAL

A. Topsoil

1. Remove all topsoil to a depth at which subsoil is encountered, from all areas under structures, pavements, and from all areas which are to be cut to lower grades or filled.

2. With the Engineer's approval, topsoil to be used for finish grading may be stored on the site.

3. Other topsoil may be used for fill in non-critical areas with approval of the Engineer.

4. Properly dispose of all excess topsoil off site.

B. Obstructions

1. Remove and dispose of all trees, stumps, roots, boulders, sidewalks, driveways, pavement, pipes and the like, as required for the performance of the work.

2. Exercise care in excavating around catch basins, inlets and manholes so as not to disturb or damage these structures.

3. Avoid removing or loosening castings or pushing dirt into catch basins, inlets, and manholes.

4. Damaged or displaced structures or casting shall be repaired, replaced and dirt entering the structures during the performance of the work shall be removed at no additional cost to the Owner.

C. Utilities to be Abandoned

1. When pipes, conduits, sewers or other structures are removed from the trench leaving dead ends in the ground, such ends shall be fully plugged or sealed with brick and non-shrink grout.

2. Abandoned structures such as manholes or chambers shall be entirely removed unless otherwise specified or indicated on the Drawings.

3. All materials from abandoned utilities which can be readily salvaged shall be removed from the excavation and stored on the site at a location as directed by the Owner.

4. All salvageable materials will remain the property of the Owner unless otherwise indicated by the Owner.

D. Extra Earth Excavation: In case soft or excessively wet material which, in the opinion of the Engineer, is not suitable, is encountered below the final subgrade elevation of an excavation or underneath a structure, the Engineer may order the removal of this material and its replacement with crushed stone or other suitable material in order to make a suitable foundation for the construction of the structure.

E. Cutting Paved Surfaces and Similar Improvements

1. Remove existing pavement as necessary for installing pipe utilities and appurtenances or as otherwise shown on the Drawings.

2. Before removing any pavement, mark the pavement neatly, paralleling pipe lines and existing street lines. Space the marks at least the width of the trench.

3. Break pavement along the marks by scoring with a rotary saw and breaking below the score by the use of jack hammers or other suitable tools.

4. Do not pull pavement with machines until completely broken and separated from pavement to remain.

5. Do not disturb or damage the adjacent pavement. If the adjacent pavement is disturbed or damaged, remove and replace the damaged pavement. No additional payment will be made for removing and replacing damaged adjacent pavement.

6. Remove and replace sidewalks disturbed by construction for their full width and to the nearest undisturbed joint.

7. The Contractor may tunnel under curbs that are encountered. Remove and replace any curb disturbed by construction to the nearest undisturbed joint.

3.02 EXCAVATION

A. Method

1. All excavation shall be open cut from the surface except as indicated on the Drawings.

2. All excavations for pipe appurtenances and structures shall be made in such manner and to such depth and width as will give ample room for building the structures and for bracing, sheeting and supporting the sides of the excavation, for pumping and draining groundwater and wastewater which may be encountered, and for the removal from the excavation of all materials excavated.

3. Take special care so that soil below the bottom of the structure to be built is left undisturbed.

B. Grades

1. Excavate to grades indicated on the Drawings

2. Where excavation grades are not indicated on the Drawings, excavate as required to accommodate installation.

C. Disposal of Excavated Material

1. Remove and properly dispose of all excavated material not needed to complete filling, backfilling and grading.

2. Dispose of excavated material off site at locations secured by the Contractor and in accordance with all requirements of federal, state, county and municipal regulations. No debris of any kind shall be deposited in any stream or body of water, or on any street or alley. No debris shall be deposited on any private property except by written consent of the property owner. In no case shall any material be left on the Project, shoved onto abutting private properties, or be buried in embankments or trenches on the Project.

3.03 EXCAVATING FOR STRUCTURES

A. Earth Excavation

1. Earth excavation shall include all substances to be excavated other than rock. Earth excavation for structures shall be to limits not less than two feet outside wall lines, to allow for formwork and inspection, and further as necessary to permit the trades to install their work. All materials loosened or disturbed by excavation shall be removed from surfaces to receive concrete or crushed stone.

2. No separate payment will be made for earth excavation. The cost of such work and all costs incidental thereto shall be included in the price bid for the item to which the work pertains.

B. Excavation for Foundations: Footings and slabs on grades shall rest on undisturbed earth, rock or compacted materials to insure proper bearing.

1. Unsuitable Foundation Material

a. Any material in the opinion of the Engineer which is unsuitable for foundation shall be removed and replaced with compacted crushed stone, or with compacted fill material as directed by the Engineer. Crushed stone shall meet the requirements of the Louisiana Department of Transportation Specification 1003.03(b).

b. No determination of unsuitability will be made until all requirements for dewatering are satisfactorily met.

2. Unauthorized Excavation

a. Care shall be taken that excavation does not extend below bottom levels of footings or slabs on earth or rock. Should the excavation, through carelessness or neglect, be carried below such levels, the Contractor shall fill in the resulting excess excavation with concrete under footings and compacted crushed stone or other approved material under slabs. Crushed stone or gravel shall meet the Louisiana Department of Transportation Specification 1003.03(b). Should excavation be carried beyond outside lines of footings, such excess excavation shall be filled with concrete, or formwork shall be provided, as directed by the Engineer.

b. Additional costs of corrective work, made necessary by unauthorized excavation of earth or rock, shall be borne by the Contractor.

C. Unsuitable Bearing

1. If suitable bearings for foundations are not encountered at the elevations indicated on the Drawings, immediately notify the Engineer.

2. Do not proceed further until instructions are received and necessary measurements made for purposes of establishing additional volume of excavation.

3.04 FILL

A. Controlled Fill

1. The fill for structures, and slabs on grade shall be controlled fill.

2. After the existing ground or excavated area has been proof rolled and examined by the Engineer, all holes and other irregularities shall be filled and compacted before the main fill is placed.

3. The fill shall be placed in even layers not exceeding 10-inches in depth and shall be thoroughly compacted as herein specified.

4. If an analysis of the soil being placed shows a marked difference from one location to another, the fill being placed shall not be made up of a mixture of these materials.

5. Each different type of material shall be handled continuously so that field control of moisture and density may be based upon a known type of material.

6. No fill shall be placed following a heavy rain without first making certain on isolated test areas that compaction can be obtained without damage to the already compacted fill.

B. Placement

1. Prior to placement of any material in embankments, the area within the embankment limits shall be stripped of topsoil and all unsuitable materials removed as described under Article 3.02. The area shall then be scarified to a depth of at least 6-inches.

2. Fill materials shall be placed in continuous approximately horizontal layers extending the full width of the embankment cross-section and the full dimension of the excavation where practical and having a net compacted thickness of not over 6-inches.

3. Fill materials shall be placed at optimum moisture content within practicable limits (not less than one percent below optimum). Optimum moisture shall be maintained by sprinkling the layers as placed or by allowing materials to dry before placement.

C. Compaction

1. Fill materials shall be compacted to dry densities as determined by the Standard Proctor Compaction Test performed in accordance with ASTM D 698.

2. Fill materials supporting structures and backfill around structures shall be compacted to 95 percent of the maximum dry density. The top 12-inches of fill material supporting roadways, parking areas, sidewalks, structures, and buildings shall be compacted to 98 percent of the maximum dry density. Fill placed for general site grading shall be compacted to 90 percent of the maximum dry density.

3. Compaction of embankments shall be by sheepsfoot rollers with staggered, uniformly spaced knobs and suitable cleaning devices. The projected area of each knob and the number of spacing of the knobs shall be such that the total weight of the roller and ballast when disturbed over the area of one row of knobs shall be 250 psi. Placement and compaction of materials shall extend beyond the final contours sufficiently to insure compaction of the material at the resulting final surface. Final contours shall then be achieved by a tracked bulldozer shaping the face of the embankment.

4. Compaction of backfill around structures shall be accomplished by heavy power tamping equipment.

5. If tests indicate that density of fill is less than that specified, the area shall be recompacted or undercut, filled, and compacted until specified density is achieved.

D. Final Grading: Upon completion of construction operations, the area shall be graded to finish contour elevations and grades shown on the Drawings. Graded areas shall be made to blend into conformation with remaining ground surfaces. All surfaces shall be left smooth and free to drain.

E. Excess Material

1. Any excess earth excavation and unsuitable materials shall be placed on the site as directed by the Engineer. Surfaces and slopes of waste fills shall be left smooth and free to drain.

2. No separate payment will be made for backfilling. The cost of all such work and all costs incidental thereto shall be included in the price bid for the item to which the work pertains.

F. Moisture

1. All fill shall be compacted with the moisture content as established by the 98 percent intercept on the moisture density curves or the moisture content at the shrinkage limit, whichever is less.

2. If fill material is too wet, provide and operate approved means to assist the drying of the fill until suitable for compaction. If fill material is too dry, provide and operate approved means to add moisture to the fill layers.

3.05 BACKFILLING

A. Backfill carefully to restore the ground surface to its original condition. Dispose of surplus material.

B. Compact backfill underlying roadways, parking areas, sidewalks, structures, and buildings to 95 percent of the maximum dry density.

C. Backfill for Pipe

1. Initial: Place initial backfill material carefully around the pipe above bedding in uniform 6-inch layers to a depth of at least 18-inches above the pipe bell. Compact each layer thoroughly with suitable hand tools. Do not disturb or damage the pipe. Backfill on both sides of the pipe simultaneously to prevent side pressures. Initial backfill material is earth material excavated from the trench which is clean and free of rock, organics, and other unsuitable material. If materials excavated from the trench are not suitable for use as initial backfill material, obtain suitable materials elsewhere.

2. Final: After initial backfill material has been placed and compacted, backfill with general excavated material. Place backfill material in uniform layers and thoroughly compact with heavy power tamping tools of the “Wacker” type.

3. Settlement: If trenches settle, re-fill and grade the surface to conform to the adjacent surfaces.

4. Additional Material

    a. Where final grades above the pre-existing grades are required to maintain minimum cover, additional fill material will be shown on the Drawings.

    b. Utilize excess material excavated from the trench if the material is suitable. No additional payment will be made for additional material when excavated materials are used.

    c. If excess excavated materials are not suitable, or if the quantity available is not sufficient, provide suitable additional fill material. Payment for additional material imported to the job site will be made for the quantity of materials provided at the unit price bid.

D. Backfilling Around Structures

1. General

    a. Remove debris from excavations before backfilling.

    b. Do not backfill against foundation walls until so directed by the Engineer, nor until all indicated perimeter insulation and/or waterproofing is in place.

    c. Protect such insulation and/or waterproofing during filling operations.

    d. Wherever possible, backfilling shall be simultaneous on both sides of walls to equalize lateral pressures.

    e. Do not backfill against walls until all permanent construction is in place to furnish lateral support on both top and bottom of wall.

    f. Backfilling against walls is to take place after all the concrete in the affected members has attained the specified strengths.

2. Materials: Backfill material placed against structures built or encountered during the work of this Section shall be suitable fill material. No broken concrete, bricks or similar materials will be permitted as backfill.

3.06 GRADING

A. General: Perform all rough and finish grading required to attain the elevations indicated on the Drawings. Perform finish grading to an accuracy of 0.10 foot.

B. Compact backfill underlying structures to 95 percent of the maximum dry density. The top 12-inches of backfill shall be compacted to 98 percent of the maximum dry density.

C. Backfilling Around Structures

1. General

    a. Remove debris from excavations before backfilling.

    b. Do not backfill against foundation walls until so directed by the Engineer, nor until all indicated perimeter insulation and/or waterproofing is in place.

    c. Protect such insulation and/or waterproofing during filling operations.

d. Wherever possible, backfilling shall be simultaneous on both sides if walls to equalize lateral pressures.

e. Backfilling against walls shall take place after all the concrete in the affected members has attained the specified strengths.

2. Materials: Backfill material placed against structures built or encountered during the work of this Section shall be suitable fill material. No broken concrete, bricks or similar materials will be permitted as backfill.

D. Treatment After Completion of Grading

1. After grading is completed, permit no further excavation, filling or grading, except with the approval of the Engineer.

2. Use all means necessary to prevent the erosion of freshly graded areas during construction and until such time as permanent drainage and erosion control measures have been installed.

3.07 SURFACE WATER CONTROL

A. Regulations and Permits: Obtain all necessary soil erosion control permits and all pertinent rules, laws, and regulations of all applicable federal, state, county and municipal regulatory agencies.

B. Unfavorable Weather

1. Do not place, spread or roll any fill material during unfavorable weather conditions.

2. Do not resume operations until moisture content and fill density are satisfactory to the Engineer.

C. Provide berms or channels to prevent flooding of subgrade. Promptly remove all water collected in depressions.

D. Pumping and Drainage

1. Provide, maintain and use at all times during construction adequate means and devices to promptly remove and dispose of all water from every source entering the excavations or other parts of the work.

2. Dewater by means which will insure dry excavations, preserve final lines and grades, do not disturb or displace adjacent soil.

3. All pumping and drainage shall be done with no damage to property or structures and without interference with the rights of the public, owners of private property, pedestrians, vehicular traffic or the work of other contractors, and in accordance with all pertinent laws, ordinances and regulations.

4. Do not overload or obstruct existing drainage facilities.

3.08 SETTLEMENT

A. The Contractor shall be responsible for all settlement of backfill, fills and embankments which may occur within one year after final acceptance of the Work by the Owner.

B. The Contractor shall make, or cause to be made, all repairs or replacements made necessary by settlement within 30 days after receipt of written notice from the Engineer or Owner.

3.09 CLEANING

Upon completion of the work of this Section, remove all rubbish, trash and debris resulting from construction operations. Remove surplus equipment and tools. Leave the site in a neat and orderly condition acceptable to the Engineer.

END OF SECTION 02200

SECTION 02660

TESTING OF PIPELINES

PART 1 - GENERAL

1.01. SCOPE OF WORK

A. Furnish all labor, materials, tools, equipment and related items required to perform exfiltration testing and deflection testing of gravity pipelines and to perform pressure and leakage testing of pressure pipelines.

1.02. REFERENCE SPECIFICATIONS

A. American Society of Testing Materials (ASTM), latest edition:

1. ASTM F1417 – Standard Test Method for Installation Acceptance of Plastic Gravity Sewer Lines Using Low-Pressure Air.

B. American Water Works Association (AWWA), latest edition:

1. AWWA C600 – AWWA Standard for Installation of Ductile-Iron Mains and Their Appurtenances.

PART 2 - PRODUCTS (NOT USED)

PART 3 - EXECUTION

3.01. GENERAL

A. Field-test the entire length of installed gravity and pressure lines for water tightness.

B. Conduct hydrostatic pressure and leakage tests on all pressure pipelines carrying water or wastewater.

C. Furnish all labor and equipment, including test pump with regulated by-pass meters and gauges, required for conducting pipeline tests. Furnish equipment and necessary piping as required to transport water used in testing from source to test location.

D. Schedule time and sequence of testing, subject to observation and approval by the Owner and the Engineer. Provide adequate labor, tools and equipment to operate valves. Coordinate all valve operation with the Owner. Locate and repair any leaks discovered during the initial filling of the pipeline or during the course of the tests.

3.02. CLEANING

A. At the conclusion of the work, thoroughly clean all pipelines by flushing with water or other means to remove all dirt, stones, pieces of wood, or other material which may have entered the pipes during the construction period. Remove debris cleaned from the lines from the low end of the pipeline. Remove all obstructions after cleaning. After the pipelines are cleaned and if the groundwater level is above the pipe or following a heavy rain, the Engineer will examine the pipes for leaks. Repair any defective pipes or joints.

3.03. TEST PROCEDURES FOR GRAVITY PIPELINES

A. Gravity Pipelines, General: Install and backfill gravity pipelines, and then test pipe using either Exfiltration Water Testing or Low Pressure Air Testing.

1. Exfiltration Water Testing

a. Fill the section of pipe with water and allow it to stand for a sufficient time to adsorb such water as it will and for the escape of all air from the line. Carefully examine the sections undergoing testing for leakage. Repair all known leaks, regardless of these test requirements.

b. Fill the pipeline to a reference level in a manhole or reservoir of sufficient capacity to allow a reference level to be established. The reservoir must be of sufficient capacity to prevent the water level from dropping below the crown of the pipe during the 24-hour test period. If the water level drops below the crown of the pipe, the test shall be voided and run again until such time the water level is maintained above the crown throughout the duration of the test.

c. At the end of a 24-hour period, add water as necessary to the pipeline to bring the water level back to the referenced line. Accurately measure all added water with an approved water meter to establish an exfiltration rate.

d. Leakage during the above test shall not exceed a rate equal to 50 gallons per inch of internal diameter per mile per 24 hours.

e. Repair all observed leaks regardless of the measured leakage rate.

2. Low Pressure Air Testing

a. This test shall conform to the procedure described in ASTM F1417, ASTM C924 or other appropriate procedures. For safety reasons, limit air testing to pipe sections less than 36-in. diameter (average inside diameter). Lines 36-in. diameter and larger may be air tested at each joint. For sections of pipe less than 36-in. diameter, compute the minimum time allowed for the pressure to drop from 3.5 psig to 2.5 psig by the following equation:

$$T = \frac{0.085(D)(K)}{Q} \qquad \text{Where:}$$

T = time for pressure to drop 1.0 psi gauge, in seconds

K = 0.000419DL, but not less than 1.0

D = average inside diameter, in inches

L = length of line of same pipe size being tested, in feet

Q = rate of loss, assume 0.0015 ft^3/min/sq.ft. internal surface

b. Repair all observed leaks regardless of the air test results.

3.04. TEST PROCEDURES FOR PRESSURE PIPELINES

A. GENERAL

1. After laying pipe and consolidating backfill, subject all newly laid pipe or any valved section thereof, to hydrostatic pressure testing. Conduct the pressure testing for the duration as described below, unless otherwise specified or noted on the Drawings. Disconnect all meters, fixtures, devices or appliances, which are connected to the pipeline system and which might be damaged if subjected to the specified test pressure. Plug or cap the ends of branch lines during the testing procedures.

2. Fill each valved (capped or plugged) section of pipe slowly with water and expel all air. If permanent air vents are not located at all high points, install corporation or blow-off cocks at such points to expel air as filling takes place. After expelling all air, close the cocks and keep the pipe filled until tested. Examine all exposed pipe, fittings, valves, hydrants and joints while under test pressure, and stop all visible leaks. Remove and replace any cracked or defective pipe, fittings, valves or hydrants discovered during testing. Replace the damaged pipe or appurtenances and repeat the testing to the satisfaction of the Owner.

B. Hydrostatic Leakage Tests

1. Leakage shall be defined as the quantity of water that must be supplied into the newly laid pipe, or any valved section thereof, to maintain the specified leakage test pressure after the air in the pipeline has been expelled and the pipe has been filled with water.

2. Determine leakage by recording the quantity of water pumped into the pipeline through a standard water meter of a size appropriate to secure an accuracy of ±2 percent at the average flow rate pumped. The Engineer must approve other methods of measuring the quantity of water pumped prior to commencing the hydrostatic test. Pressurize the pipeline to a least 50-percent (50%) above normal operating or working pressure of the system, but never less than the minimum test pressures listed below. Maintain the test pressure for a period of two (2) hours.

Piping Description	Test Pressure
Station Piping	150 psi
Force Main Piping	150 psi
Potable Water Piping	150 psi

3. Calculate allowable leakage for the types of pipe used as follows:

a. Cast Iron, Ductile Iron, and PVC Pipe. Allowable as permitted by AWWA C600, "Installation of Gray and Ductile Cast-Iron Mains and Appurtenances", which is not to exceed that determined by the formula:

$$L = \frac{(SD\sqrt{P})}{133{,}200} \quad \text{Where :}$$

L = the allowable leakage, in gallons per hour

S = the length of pipeline tested, in feet

D = the nominal diameter of the pipe, in inches

P = the average test pressure during the leakage tests, in psi gauge

4. In the event any section of the tested line fails to meet the above specified requirements for water tightness, determine and remedy the cause of the excessive leakage at no additional cost to the Owner, including retesting if required.

3.05. FINAL ACCEPTANCE

A. The Owner will not accept pipe installation until the Contractor has repaired all known leaks, whether or not leakage is within allowable limits. Locate and repair all leaks at no additional cost to the Owner.

B. The Owner's representative will certify successful completion of all required pressure and leakage tests before the pipeline is accepted.

3.06. WATER SOURCE

A. Unless otherwise noted in the plans, notify the Owner 24 hours prior to obtaining water for testing purposes.

END OF SECTION 02660

SECTION 02800

SEWERS AND APPURTENANCES

PART 1 - GENERAL

1.01. WORK INCLUDED

A. This section covers the construction of the buried piping, lift station piping, and appurtenances.

B. Included in this section are force mains, access hatches, and lift station piping. Sheeting, shoring and bracing of excavations is covered in Section 02160 – Sheeting, Shoring, and Bracing. Valves, couplings, and adapters are covered in Section 15100 – Valves and Appurtenances.

C. The Contractor shall furnish all materials, equipment, transportation, tools and labor necessary and complete the system in substantial conformance with the lines, grades, and locations shown on the Drawings.

1.02. REFERENCED SPECIFICATIONS

A. Those parts of the referenced specifications which are applicable hereto shall be considered as if written herein in full.

B. ASTM: American Society of Testing Materials.

C. AWWA: American Water Works Association.

D. ASA: American Standards Association.

PART 2 - PRODUCTS

2.01. FOUNDATION, EMBEDMENT, & BACKFILL

A. Embedment Material shall be a non-plastic, granular, siliceous material with 100% passing the ½ inch sieve, 75 – 100% passing the No. 10 sieve and 0 to 10% passing the No. 200 sieve, free of trash, roots and weeds and other deleterious materials.

B. Backfill material shall be as indicated on the Drawings.

2.02. FORCE MAIN AND LIFT STATION PIPING

A. Below Grade Piping

1. Below grade force main shall be PVC.

a. PVC pipe sizes 4”-12” shall conform with ANSI/AWWA C900 with a dimension ratio (DR) of 18 and rated working pressure of 150 psi. Fittings shall be ductile iron mechanical joint. Megalug Series 2000 PV Mechanical Joint Restraint shall be used at ductile iron fittings to PVC pipe joints. EBAA Series 1500 joint restraint shall be used at PVC to PVC joints. Where additional joints require restraint, the length of restrained joint pipe shall be as indicated on the drawings. Mechanical Joint fittings shall meet the requirements of ANSI A21.11 except as amended by ANSI A-21.51.

b. PVC pipe sizes >12” shall conform with ANSI/AWWA C900 with a dimension ratio (DR) of 21 and rated working pressure of 200 psi. Fittings shall be ductile iron mechanical joint. Megalug Series 2000 PV Mechanical Joint Restraint shall be used at ductile iron fittings to PVC pipe joints. EBAA Series 1500 joint restraint shall be used at PVC to

PVC joints. Where additional joints require restraint, the length of restrained joint pipe shall be as indicated on the drawings. Mechanical Joint fittings shall meet the requirements of ANSI A21.11 except as amended by ANSI A-21.51.

B. Lift Station Piping

1. All rigid station piping located within the wet well, within the valve box, between the wet well and valve box, for the first 5 feet outside the wet well and valve box, and located above grade shall be ductile iron flanged piping. Ductile iron flanged pipe shall be in accordance with ANSI/AWWA C115/A21.15, Class 53. Nuts and bolts shall be 304 stainless steel. Anti-seize compound shall be applied to all threads. Flange gaskets shall be full face type SBR per AWWA C111. Thickness shall be 1/8-inch unless indicated otherwise.

C. Ductile Iron Piping Lining Requirements

1. Discharge/Station Piping shall be cement lined at the factory in accordance with AWWA C104 and epoxy lined at the factory in accordance AWWA C116.

D. Ductile Iron Piping Coating Requirements

1. For buried service applications, the Contractor shall use bituminous coating in accordance with AWWA C151 and C110.

2. For above grade applications, the Contractor shall use primer and final coating in accordance with Section 09960 – Coatings.

PART 3 - EXECUTION

3.01. EXCAVATION

A. Excavations shall be open cuts with vertical sides. Excavated material shall be placed so as not to interfere with public movement or to endanger the trench.

B. No greater length of trench shall be opened in advance of the installed pipe or structure, nor left unfilled to the rear for more than 40 feet, or to such other shorter length as the Engineer shall direct. All open trenches shall be barricaded, fenced, and lighted during non-working hours or when operations are temporarily suspended.

C. If unauthorized excavation is made below the grade required by the plans, the Contractor shall backfill to required grade with embedment material at the Contractor’s expense.

D. Excavation includes removal of stumps, roots and logs encountered within the trench, and to a depth of 12" below the bottom of the trench. Excavation below grade to remove an obstruction encountered in the trench section and which may extend below grade and the foundation materials used to fill the undercut shall be paid under the Allowance Item in accordance with Section 01025.

E. The trench width shall be at the dimensions shown on the Drawings.

F. Base slabs for wet wells and manholes shall be constructed on dry, compacted excavation bottoms.

3.02. SHEETING & BRACING FOR PIPELINES

A. Protection of the excavation against caving or settling of the banks shall be the sole responsibility of the Contractor. He shall protect the sides of his excavation by sheeting and bracing as may be necessary to support the trench walls and any adjacent structures and sheeting and shoring

shall be such as the nature of the ground and related construction and material storage may dictate.

B. The sheeting and bracing, where indicated on the drawings, is for the purpose of controlling the loading on the pipe only. The Contractor by his operations, the proximity of his equipment to the trench and the weight of this equipment, the location of backfill and construction material relative to the trench, etc. will increase or decrease the possibility of trench wall collapse and is solely responsible for installing the sheeting and bracing necessary to prevent this collapse.

C. All sheeting and bracing left in the trench shall be cut off a minimum of 3 feet below existing ground surface.

D. For sheeting and bracing of excavations for structures, see Section 02160 – Sheeting, Shoring, and Bracing.

3.03. FOUNDATION

A. The foundation shown on the drawings is a minimum design section; the use of additional material will be at the Contractor's expense.

3.04. BACKFILLING

A. Backfilling of piping trenches shall begin as soon as the joints have been made properly and the location of fittings properly recorded.

B. Embedment material shall be placed in the trench on top of the foundation on both sides and over the pipe in accordance with the Drawings.

C. Granular material or select excavated material, as noted on the Drawings, shall be placed over the embedment material in layers not to exceed 12" and each layer tamped and compacted prior to the placement of the next layer.

D. The requirement for embedment and backfilling varies with the relative location of the pipe line to the pavement as shown on the Drawings.

3.05. INSTALLATION OF PIPELINES

A. Contractor, prior to laying pipe, shall verify the location and elevation of tie-ins. Unless indicated otherwise, all pipes shall be installed with 3’-0” minimum cover.

B. Lay pipe to line and grades with bell upgrade. Force mains and waterlines shall be laid to avoid the gravity sewer system and gravity drainage. Unless indicated otherwise, pressure lines shall be installed to be under or over the gravity pipe with both pipes maintaining a minimum 3’-0” of cover and one foot (minimum) separation between the two pipes.

C. Each pipe length shall be clean and laid to form a close joint.

D. All material excavated and all construction material shall be placed so as to interfere as little as possible with public travel.

E. Give free access to fire engines, fire hydrants, water valves, fire alarm boxes, mail boxes and driveways.

F. Protect all poles, posts, gallery supports, signs, etc.

G. Should the location or position of any gas or water pipe, telephone conduit, sewer connection, etc. be such that it is in direct conflict with the work being constructed, then the conflict shall be

remedied as follows:

1. For private utilities such as telephone or power lines and poles, the Contractor shall request in writing to the proper utility company that the conflicting item be removed.

2. For public utilities, the Contractor shall notify the utility as soon as the conflict is discovered to request assistance.

3. The Contractor, at the Contractor's expense, shall repair all surface and subsurface structures damaged by the Contractor's actions that cross or are in the trench in such a location as not to directly conflict with the sewer.

4. When a utility, such as a gas pipe line, is shown on the Drawings in proximity to the pipeline to be installed, the Contractor shall carefully find the exact location of this utility and protect it before beginning work on the pipeline.

3.06. CARE & RESTORATION OF STREETS, DRIVEWAYS, ETC.

A. All streets, driveways, parking areas, and sidewalks damaged by the Contractor shall be repaired at the Contractor's expense.

1. If not shown otherwise on the Drawings, concrete for repairs shall contain 6-1/2 sacks of cement per cubic yard, a water reducing admixture and have a maximum slump of 4".

2. If not shown otherwise on the Drawings, repairs of concrete shall be to the nearest joint, or, if approved by the Engineer to a saw cut joint.

3. Repairs shall be of the thickness of the concrete being repaired but not less than 4" for sidewalks, 6" for driveways and 8" for streets, unless otherwise shown on the Drawings.

B. Excavations through yards and grassy areas shall be sodded in accordance with the Specifications.

3.07. TESTING AND ACCEPTANCE

A. See Section 02660 – Testing of Pipelines.

END OF SECTION 02800

SECTION 03300

CAST-IN-PLACE CONCRETE

PART 1: GENERAL

1.01 SCOPE OF WORK

A. Furnish all labor, materials, equipment and incidentals required to place all cast-in-place concrete, reinforcing steel, forms, waterstops, and miscellaneous related items including sleeves, anchor bolts, inserts and embedded items specified under other Sections.

B. All cast-in-place concrete work shall be performed in accordance with ACI 318 except as hereinafter specified.

1.02 REFERENCE SPECIFICATIONS

A. American Concrete Institute (ACI)

1. ACI 301 Specifications for Structural Concrete for Buildings.

2. ACI 304 Recommended Practice for Measuring, Mixing, Transporting, and Placing Concrete.

3. ACI 305 Hot Weather Concreting.

4. ACI 306 Cold Weather Concreting.

5. ACI 308 Standard Practice for Curing Concrete.

6. ACI 309 Standard Practice for Consolidation of Concrete.

7. ACI 318 Building Code Requirements for Reinforced Concrete.

8. ACI 347 Recommended Practice for Concrete Formwork.

9. ACI 350 Concrete Sanitary Engineering Structures.

B. American Society for Testing and Materials (ASTM)

1. ASTM C33 Specification for Concrete Aggregates.

2. ASTM C94 Specification for Ready-mix Concrete.

3. ASTM C150 Specification for Portland Cement.

4. ASTM C260 Specification for Air-Entraining Admixtures for Concrete.

5. ASTM C494 Specification for Chemical Admixtures for Concrete.

C. National Ready-Mixed Concrete Association

Truck Mixer and Agitator Standards

D. U.S. Army Corps of Engineers

CRD-C572 Polyvinyl Chloride Waterstops

1.03 SUBMITTALS

A. Submit to the Engineer for review in accordance with Section 01300 complete shop drawings, working drawings and product data showing placement of forms, form joints, locations of form ties in exposed exterior concrete, rustications, major inserts, and block outs.

B. Submit to the Engineer for review in accordance with Section 01300 the proposed methods of concrete placement, curing, and protection.

C. Submit to the Engineer for review in accordance with Section 01300 the proposed concrete mixes designed within the limits of these specifications, listing the brand and type of cement, source and results of tests of aggregates and admixtures, at least 45 days prior to the beginning of placing concrete.

D. Deliver to the Engineer concrete mix tickets as hereinafter specified.

1.04 QUALITY ASSURANCE

A. The actual acceptance of aggregates and development of mix proportions to produce concrete conforming to the specific requirements shall be determined prior to the placement of any concrete, by means of laboratory tests made with the constituents to be used on the work.

B. The limiting strengths, water-cement ratios and cement factors as shown on Table A shall apply. Maximum water-cement (#/#) for water retaining structures shall be 0.45.

TABLE A

Minimum Comp. Str. psi at 28 days	Maximum Net Water Content gals/100 lbs*	Minimum Cement Factor 100 lbs/cu. yd.**
4000	5.4	5.64
6000	4.5	6.58

* Maximum; decrease if possible. This represents total water in mix at time of mixing, including free water on aggregates, and water in admixture solution.

** Minimum; increase as necessary to meet other requirements. These cement factors apply to "controlled" concrete subject to specific inspection.

C. When high-early-strength Portland cement is permitted, the same strength requirements shall apply except that the indicated strengths shall be attained at seven (7) days instead of twenty-eight (28) days.

D. If, during the progress of the work, it is impossible to secure concrete of the required workability and strength with the materials being furnished, the Engineer may order such changes in proportions or materials, or both, as may be necessary to secure the desired properties. All changes so ordered shall be made at the Contractor's expense.

E. If, during the progress of the work, the Contractor desires to use materials other than those originally approved, or if the materials from the sources originally approved change in characteristics, the Contractor shall, at his own expense, have made new acceptance tests of aggregates and establishment of new basic mixtures and submit them to the Engineer for approval.

F. Under special circumstances, the Engineer may allow minor deviations from the material requirements specified, provided the resulting concrete quality is not adversely affected or provided a suitable adjustment in cement content is made to compensate for such deviations

without cost to the Owner.

G. Consistency of the concrete as measured by the ASTM Designation C143 shall be as shown in Table B.

TABLE B

	Slump (inches)	
Portion of Structure	Max.	Min.
Pavement and slabs at grade	4	2
Slabs below grade	4	2

H. Concrete shall be of such consistency and mix composition that it can be readily worked into the corners and angles of the forms and around the reinforcement, inserts, and wall castings without permitting materials to segregate or free water to collect on the surface, due consideration being given to the methods of placing and compacting.

I. No excessively wet concrete will be permitted, and if at any time concrete of such consistency beyond the limits of Table B is delivered to the job, the Engineer may direct the Contractor to reject same. No additional water shall be added by drivers of transit-mix trucks except that established for the design. Failure to comply with this requirement shall be justification for re-jecting the concrete.

J. The concrete supplier shall submit a certified copy of the mill test certificate showing that the Portland cement used in the batching of all concrete delivered to the project is in conformance with the requirements of these specifications. The mill test certificate shall show point of origin of the Portland cement, type, and shall state that the material is in conformance with these specifications and standard mill practice established by the Portland Cement Association. A mill test certificate shall be supplied for each lot of cement that is used in the manufacture of concrete for this project. Cements not included on the LADOTD approved products list will not be acceptable.

1.05 ACCEPTANCE TESTS

A. Conformity of aggregates to these Specifications, and the actual proportions of cement, aggregates, and water necessary to produce concrete conforming to the requirements set forth in Table A, shall be determined by tests made with representative samples of the materials to be used on the work. Tests will be made by an accredited testing laboratory selected by the Owner in accordance with Section 01410.

B. Cement may be subject to testing to determine that it conforms to the requirements of this Specification. Methods of testing shall conform to the appropriate specification, but the place, time, frequency, and method of sampling will be determined by the Engineer in accordance with the particular need.

C. Samples of fine and coarse aggregates shall be delivered to the laboratory for examination and testing at least three (3) weeks before the Contractor proposes to use them in the work.

D. Water content of the concrete shall be based on a curve showing the relation between water content and seven (7) and twenty-eight (28) day compressive strengths of concrete made using the proposed materials. The curves shall be determined by four (4) or more points, each representing an average value of at least three (3) test specimens at each age, and shall have a range of values sufficient to yield the desired data, including all the compressive strengths called for on the Drawings, without extrapolation. The water content of the concrete to be used, as determined from the curve, shall correspond to the test strengths of the laboratory trial mixtures as shown on Table C.

TABLE C

Design Strength	Minimum Lab Strength 7 Day	28 Days
4000	3500	4600
6000	4000	6000

E. In no case, however, shall the resulting mix conflict with the limiting values for maximum water-cement ratios and minimum cement contents as specified in Table A.

PART 2: PRODUCTS

2.01 MATERIALS

A. Concrete shall be of Portland cement, fine aggregate, coarse aggregate, water and admixtures as specified and shall be ready-mixed, or transit-mixed concrete produced by a plant acceptable to the Engineers. All constituents, including admixture, shall be batched at the central batch plant in accordance with ASTM C-94. Materials shall conform to these Specifications and any State or local specification requirements. Mixtures containing fly ash shall not be acceptable.

B. Cement:

1. Cement for all cast in place concrete shall be a domestic Portland cement (ASTM C150, Type I) or high early strength Portland cement (ASTM C150, Type III) free from injurious water soluble salts or alkalis.

2. High early strength cement may only be used with written approval of the Engineer.

3. Air entraining cements shall not be used.

4. Cement brands shall be subject to approval of the Engineer.

5. Fly ash and slag cements shall not be used.

C. Aggregates:

1. Fine aggregate shall consist of washed inert sand conforming to the requirements of ASTM C33, and the following detailed requirements:

Fineness Modulus	2.30-3.10
Organics	Organic Plate 2, per ASTM 40
Silt	2.0% maximum
Mortar	95% minimum as per ASTM C87 Section10
Soundness	8% maximum loss, using magnesium sulfate, subjected to 5 cycles

2. Coarse aggregate shall consist of well-graded crushed rock or washed gravel conforming to the requirements of ASTM C33 and the following detailed requirements:

Organics	Organic Plate 1, per ASTM C40
Silt	1.0% maximum
Soundness	8% maximum loss, using magnesium sulfate, subjected to 5 cycles

3. The following designated sizes* of aggregate shall be the maximum employed in concrete:

2-inch for plain concrete
1-inch for reinforced sections 10-in and over in thickness
3/4-inch for reinforced sections less than 10-in thickness

D. Water:

1. Water shall be clean and free from injurious amounts of oils, acid, alkali, organic matter, or other deleterious substances.

2. When subjected to the mortar strength test described in ASTM C87, the twenty-eight (28) day strength of mortar specimens made with the water under examination and normal Portland cement shall be at least one hundred percent (100%) of the strength of similar specimens made with distilled water.

3. Potable tap water will normally fulfill the above requirements.

E. Admixtures:

1. A water reducing agent such as Pozzolith, WRDA or equal may be used in all concrete. The admixture shall conform to ASTM C494. Proportioning and mixing shall be as recommended by the manufacturer.

2. Admixtures causing accelerated setting of cement in concrete shall not be used.

3. Air Entrainment admixtures shall not be used.

4. Anti-microbial/Waterproofing admixtures: Incorporate Xypex Bio-San C500, or equal admixture into the concrete to be used in the wet well and influent screen channels at a rate of 1% by weight of cementitious material, and in accordance with manufacturer's instructions.

F. Grout:

1. Grout for setting bearing plates for structural steel, machinery, and other equipment shall be mixed as recommended by the manufacturer to give the necessary consistency for placing and to give a minimum compressive strength of 3,000 lbs. per square inch in three (3) days, and 6,800 lbs. per square inch in twenty-eight (28) days.

2. Non-shrink grout shall be Masterflow 713 as manufactured by the Master Builders Company, Euco N-S by Euclid Chemical Co., Five Star Grout by U.S. Grout Corp., or equal.

G. Reinforcing Steel:

1. Epoxy-coated reinforcing bars shall be ASTM A 615, Grade 60 ASTM A 706, deformed bars, epoxy coated, with less than 2 percent damaged coating in each 12-inch bar length. Steel reinforcement shall be fabricated according to CRSI's "Manual of Standard Practice.

2. Bar supports, including bolsters, chairs, spacers, and other devices for spacing, supporting, and fastening reinforcing bars and welded wire reinforcement in place, shall be manufactured from steel wire, plastic, or precast concrete according to CRSI's "Manual of Standard Practice.

PART 3: EXECUTION

3.01 MEASURING MATERIALS

A. Materials shall be measured by weighing except as otherwise specified or where other methods are specifically authorized by the Engineer. The apparatus provided for weighing the aggregates and cement shall be suitably designed and constructed for this purpose. Scales shall have been certified by the local Sealer of Weights and Measures within one (1) year of use. Each size of aggregate and the cement shall be weighed separately. The accuracy of all weighing devices shall be such that successive quantities can be measured to within one percent of the desired amount. Cement in standard packages (sacks) need not be weighed, but bulk cement and fractional packages shall be weighed.

B. Water shall be measured by volume or by weight. The water-measuring device shall be capable of control to ½-percent accuracy. All measuring devices shall be subject to approval. Admixtures shall be dispensed either manually with use of calibrated containers or measuring tanks, or by means of an approved automatic dispenser designed by the manufacturer of the specific admixture.

3.02 MIXING

A. Concrete shall be ready-mixed, or transit-mixed, as produced by equipment acceptable to the Engineer. No hand-mixing will be permitted. Adding water in controlled amounts during the mixing cycle shall be done only with the express approval of, and under the direction of, the Engineer.

B. Ready-mix or transit-mixed concrete shall be transported to the site in watertight agitator or mixer trucks loaded not in excess of rated capacities for the respective conditions as stated on the name plate. Discharge at the site shall be within 1½ hours and within one (1) hour when ambient temperature is above 85°F after cement was first introduced into the mix. Central mixed concrete shall be plant-mixed a minimum of 1½ minutes per batch and then shall be truck-mixed or agitated a minimum of eight (8) minutes. Agitation shall begin immediately after the pre-mixed concrete is placed in the truck and shall continue without interruption until discharge. Transit-mixed concrete shall be mixed at mixing speed for at least ten (10) minutes immediately after charging the truck, followed by agitation without interruption until discharged.

C. All central plant and rolling stock equipment and methods shall conform to ACI 304, ASTM C94, and the latest Truck Mixer and Agitator Standards of the Truck Mixer Manufacturers' Bureau of the National Ready-Mixed Concrete Association.

D. The retempering of concrete or mortar which has partially hardened, that is, mixing with or without additional cement, aggregate, or water, will not be permitted.

E. Attention is called to the importance of dispatching trucks from the batching plant so that they shall arrive at the site of the work just before the concrete is required, thus avoiding excessive mixing of concrete while waiting or delays in placing successive layers of concrete in the forms.

F. Deliver to the Engineer at the time of each truckload transported to the site a mix ticket, showing at least the following: concrete plant identification, date, quantity of ingredients (including water) added at the batch plant, time of charge, and truck number.

3.03 INSPECTION AND CONTROL

A. The preparation of forms, placing of reinforcing steel, conduits, pipes, and sleeves, batching, mixing, transportation, placing, curing, and testing of concrete shall be at all times under the inspection of the Engineer.

B. The Owner will engage the services of an accredited testing laboratory in accordance with Section 01300 to review the basic mixtures of concrete as required by the specifications, to

test field control cylinder specimens, and to conduct other tests as specified herein or as deemed required by the Engineer to ensure the quality of concrete as specified. All tests shall be performed in accordance with the applicable ASTM standard methods.

3.04 FIELD TESTS

A. Sets of four (4) field control cylinder specimens shall be taken for every one-hundred (100) cubic yards of concrete placed. During cold weather concreting, one additional test cylinder shall be taken and cured on the job site under the same conditions as the concrete it represents. Not less than one set of specimens shall be taken on any one day when concrete is being placed. At least one slump test shall be performed for each set of test cylinders taken and for each concrete mixer truck load delivery. All specimens shall be taken in conformance with ASTM C31. When average ultimate twenty-eight (28) day strength of control cylinders in any set falls below the required ultimate strength or below proportional minimum seven (7) day strengths where proper relation between seven (7) and twenty-eight (28) day strengths have been established by tests, proportions, water content, or temperature conditions shall be changed to secure the required strength.

B. The Contractor shall cooperate in the making of such tests to the extent of allowing free access to the work for the selection of samples, providing heated (when required) moist storage facilities for specimens, affording protection to the specimens against injury or loss through his operations, and furnishing material and labor required for the purpose of taking concrete cylinder samples, curing boxes, and shipping boxes.

3.05 CONCRETE APPEARANCE

A. Concrete for every part of the work shall be of homogeneous structure which, when hardened, will have the required strength, durability and appearance.

B. Formwork, mixtures and concrete placement workmanship shall be such that concrete surfaces, when exposed, will require only minimal finishing with no excess honeycombing, voids or irregular color lines.

3.06 FORMS

A. Forms shall be used for all concrete masonry, including footings. Forms shall be so constructed and placed that the resulting concrete will be of the shape, lines, dimensions, appearance, and to the elevations indicated on the Drawings.

B. Forms for all exposed exterior and interior concrete walls shall be plywood with "A" veneer exterior on casting side. Rustications shall be at the location and to the details shown on the Drawings. Moldings for chamfers and rustications shall be milled and planed smooth.

C. Forms shall be made of wood, metal, or other approved material. Wood forms shall be constructed of sound lumber or plywood of suitable dimensions, free from knotholes and loose knots; where used for exposed surfaces, boards shall be dressed and matched. Plywood shall be sanded smooth and fitted with tight joints between panels. Metal forms shall be of an approved type for the class of work involved and of the thickness and design required for rigid construction.

D. Edges of all form panels in contact with concrete shall be flush within 1/32-inch and forms for plane surfaces shall be such that the concrete will be plane within 1/16-inch in four feet (4'). Forms shall be tight to prevent the passage of mortar and water and grout.

E. Forms for walls shall have removable panels at the bottom for cleaning, inspection, and scrubbing-in of bonding paste. Forms for walls of considerable height shall be arranged with

tremies and hoppers for placing concrete in a manner that will prevent segregation and accumulation of hardened concrete on the forms or reinforcements above the fresh concrete.

F. Molding or bevels shall be placed to produce a 3/4-inch chamfer on all exposed projecting corners, unless otherwise shown on the Drawings. Similar chamfer strips shall be provided at horizontal and vertical extremities of all wall placements to produce "clean" separation between successive placements as called for on the Plans.

G. Forms shall be sufficiently rigid to withstand vibration, to prevent displacement or sagging between supports, and constructed so the concrete will not be damaged by their removal. The Contractor shall be entirely responsible for their adequacy.

H. Forms, including new pre-oiled forms, shall be oiled before reinforcement is placed, with an approved nonstaining oil or liquid form coating having a non-paraffin base.

I. Before form material is reused, all surfaces in contact with concrete shall be thoroughly cleaned, all damaged places repaired, all projecting nails withdrawn, all protrusions smoothed and in the case of wood forms pre-oiled.

J. Form ties encased in concrete shall be designed so that after removal of the projecting part, no metal shall be within 1½-inch of the face of the concrete. That part of the tie to be removed shall be at least one-inch (1") diameter, or be provided with a wood, metal, or plastic cone at least one-inch (1") in diameter and one-inch (1") long. Form ties in concrete exposed to view shall be the cone-washer type equal to the Richmond "Tyscru". Through bolts or common wire shall not be used for form ties. Ties for water-holding structures shall have an integral waterstop that is tightly fitted to the tie at minor point.

3.07 PLACING AND COMPACTING

A. Unless otherwise permitted, the work begun on any day shall be completed in daylight of the same day.

B. Concrete is not to be placed until reinforcing steel, pipes, conduits, sleeves, hangers, anchors, and other work required to be built into concrete have been inspected and approved by the Engineer. Remove water and foreign matter from forms and excavation. Place no concrete on frozen soil, and provide adequate protection against frost action during freezing weather. All soil bottom for slabs and footings shall be approved by the Engineer before placing concrete.

C. Transport concrete from mixer to place of final deposit as rapidly as practicable by methods which prevent separation of ingredients and displacement of reinforcement, and which avoid rehandling. Partially hardened concrete is not to be used.

D. "Cold joints" are to be avoided, but if they occur, are to be treated as bonded construction joints.

E. At construction joints the surfaces of the concrete already placed, including vertical and inclined surfaces, shall be thoroughly cleaned of foreign materials and laitance, and weak concrete and roughened with suitable tools to expose a fresh face. At least two hours before and again shortly before the new concrete is deposited, the joints shall be saturated with water. After glistening water disappears, the joints shall be given a thorough coating of neat cement slurry mixed to the consistency of very heavy paste. The surfaces shall receive a coating at least 1/8-inch thick, well scrubbed-in by means of stiff bristle brushes whenever possible. New concrete shall be deposited before the neat cement dries.

F. Deposit concrete to maintain, until the completion of the unit, a horizontal plastic surface. Vertical lifts shall not exceed twenty-four inches (24") and preferably eighteen-inches (18").

G. Chutes for conveying concrete shall be of U-shaped design and sized to insure a continuous flow of concrete. Flat (coal) chutes shall not be employed. Chutes shall be metal or metal-lined and each section shall have approximately the same slope. The slope shall not be less than 25 nor more than 45° from the horizontal, and shall be such as to prevent the segregation of the ingredients. The discharge end of the chute shall be provided with a baffle plate or spout to prevent segregation. If the discharge end of the chute is more than five feet (5') above the surface of the concrete in the forms, a spout shall be used, and the lower end maintained as near the surface of deposit as practicable. When the operation is intermittent, the chute shall discharge into a hopper. Chutes shall be thoroughly cleaned before and after each run, and the debris and any water shall be discharged outside the forms. Concrete shall not be allowed to flow horizontally over distances exceeding five feet (5').

H. The pumping of concrete is an acceptable method. The proposed equipment and concrete mix shall be submitted to the Engineer for review prior to usage. The Contractor shall submit his entire plan of operation from time of discharge of concrete from the mixer to final placement in the forms, and the steps to be taken to prevent the formation of cold joints in case the transporting of concrete by chute, conveyor, or pumps is disrupted.

1. Aluminum alloy pipelines shall not be used for delivery of concrete.

2. The trial mixes intended for pumping shall be prepared and tested in laboratory in accordance with all applicable ASTM Standards, and comply to all above mentioned requirements.

3. The selected trial mixes shall be tested for pumpability. The pumpability test(s) involves a duplication of anticipated job conditions from beginning to end. The batching and truck mixing shall be the same as will be used, the same pump and operator shall be present and the pipe and/or hose layouts shall reflect the maximum height and distance contemplated.

4. If a go-devil device pushed by water is used to clean out the pipe, additional measures to prevent water spillage into the placement area shall be taken.

5. Sampling as indicated by the Engineer at both the truck discharge and points of final placement shall be employed to determine if any changes in the slump, air content and other significant mix characteristic occur. However, only the quality of the concrete at the placement end of the line will be considered.

6. No water will be permitted to be added in order to increase workability.

7. Pumps shall be operated and maintained so that a continuous stream of concrete is delivered into the forms without air pockets, segregation, or change in slump. When pumping is completed, concrete to be used remaining in the pipeline shall be ejected without contamination of concrete or segregation of ingredients. After each operation, equipment shall be thoroughly cleaned, and the flushing water shall be wasted outside the forms. Standby equipment shall be provided to assure continuity of operation when clogging or breakdown occur.

I. In thin sections of considerable height, concrete shall be placed using suitable hoppers, spouts with restricted outlets, or otherwise, as required or approved.

J. Concrete during and immediately after depositing shall be thoroughly compacted by means of suitable tools. Internal type mechanical vibrators shall be employed to produce required quality of finish. Vibration shall be done by experienced operators under close supervision and shall be carried on long enough to produce homogeneity and optimum consolidation without permitting segregation of the solid constituents or "pumping" or migration of air. All vibrators shall be supplemented by proper wooden spade puddling adjacent to forms to remove included bubbles and honeycomb. This is essential for the top lifts of walls. All vibrators shall travel at

least 10,000 rpm and be of adequate capacity. At least one vibrator shall be used for every ten (10) cubic yards of concrete placed per hour. In addition, one spare vibrator in operating condition shall be on the site.

K. Concrete slabs on the ground shall be well-tamped into place and foundation material shall be wet, tamped, and rolled until thoroughly compacted prior to placing concrete.

L. Concrete shall be deposited continuously in layers of such thickness that no concrete will be deposited on concrete which has hardened sufficiently to cause the formation of seams and planes of weakness within the section. If a section cannot be placed continuously, construction joints may be located at points as provided for in the Drawings or approved by the Engineer.

3.08 CURING AND PROTECTION

A. Protect all concrete work against injury from the elements and defacements of any nature during construction operations. Special curing procedures shall be implemented as described herein to minimize the cracking of concrete in water retaining structures.

B. Concrete placed at air temperature below 40°F shall have a minimum temperature of 60°F. When the air temperature is below 40°F or near 40°F and falling, the water and aggregates shall be heated before mixing. Accelerating chemicals shall not be used to prevent freezing. All concrete shall be so protected that the temperature at the surface will not fall below 50°F for at least seven (7) days after placing. The Contractor shall submit for approval by the Engineer the methods he proposes to use against low temperatures. No salt, manure, or other chemicals shall be used for protection.

C. All concrete, particularly exposed surfaces, shall be treated immediately after concreting or cement finishing is completed to provide continuous moist curing above 50°F for at least seven (7) days, regardless of the ambient air temperature. Walls and vertical surfaces may be covered with continuously saturated burlap, or other approved means; horizontal surfaces, slabs, etc. shall be pounded to a depth of ½-inch or kept continuously wet by use of sprinklers.

1. Slabs of water retaining structures shall be wet cured continuously with approved means for a minimum of fourteen (14) days if Type I cement is used, or for three (3) days if Type III cement is used.

2. Walls of water retaining structures shall have all their exposed surfaces covered from direct sunlight and forms left in place for a minimum of three (3) days. Curing shall commence within four (4) hours after concrete placement.

3. A LDOTD approved white pigmented curing compound shall be applied to all street pavement slabs. Application of the curing compound shall be in strict accordance with the manufacturer's recommendation including application rates.

D. In cold weather supplementary continuous warm curing (above 50°F) shall provide a total of 350-day degrees (i.e., five (5) days, 70°F, etc.) of heat.

E. In hot weather, concrete when deposited shall have a placing temperature which will not cause difficulty from loss of slump, flash set or formation of cold joints. In no case shall the temperature of concrete being placed exceed 90°F.

F. Finished surface and slabs shall be protected from the direct rays of the sun to prevent checking and crazing.

3.09 REMOVAL OF FORMS

A. Except as otherwise specifically authorized by the Engineer, forms shall not be removed before the concrete has cured as specified above in Subparagraph 3.08C and the concrete has

attained a strength of at least thirty percent (30%) of the ultimate strength prescribed by the design, and not before reaching the following number of day-degrees (whichever is the longer):

Forms for	Day-degree*
Beams and slabs	500
Walls and vertical surfaces (non-water retaining)	100
Walls and vertical surfaces (water retaining)	150

* Day-degree: Total number of days times average daily air temperature at surface of concrete. For example, five (5) days at a daily weighted average temperature of 60°F equal 300 day-degrees. (Days with temperatures below 50°F not to be included).

B. Shores shall not be removed until the concrete has attained at least 75% of the specified strength and also sufficient strength to support safely its own weight and the construction live loads upon it, but concrete shall be minimum age of fourteen (14) days before such removal.

3.10 FAILURE TO MEET REQUIREMENTS

A. Should the strengths shown by the test specimens made and tested in accordance with the above provisions fall below the values given in Table A, the Engineer shall have the right to require changes in proportions as outlined above to apply to the remainder of the work. Furthermore, the Engineer shall have the right to require additional curing on those portions of the structure represented by the test specimens which failed, the cost of such additional curing to be at the Contractor's expense. In the event that such additional curing does not give the strength required, as evidenced by core and/or load tests, the Engineer shall have the right to require strengthening or replacement of those portions of the structure which fail to develop the required strength. The cost of all such core borings and/or load tests and any strengthening or concrete replacement required because strengths of test specimens are below that specified, shall be entirely at the expense of the Contractor. In such cases of failure to meet strength requirements the Contractor and Engineer shall confer to determine what adjustment, if any, can be made in conformity with Sections 16 and 17 of ASTM C94.

B. When the tests on control specimens of concrete fall below the required strength, the Engineer will permit check tests for strengths to be made by means of typical cores drilled from the structure in accordance with ASTM C42 and C39. In case of failure of the latter, the Engineer, in addition to other recourses, may require, at the Contractor's expense, load tests on any one of the slabs, beams, piles, caps, and columns in which such concrete was used. Test need not be made until concrete has aged sixty (60) days.

C. Slabs or beams, under load test, shall be loaded with their own weights plus a super-imposed load of two (2) times design live load. The load shall be applied uniformly over portion being tested in approved manner, and left in position for 24 hours. The structure shall be considered satisfactory if deflection "D" in feet, at the end of a 24-hour period, does not exceed value:

$$D = 0.001(L \times L)/t$$

in which "L" is span in feet, "t" is depth of slab or beam in inches.

D. If deflection exceeds "D" in the above formula, the concrete shall be considered faulty unless within 24 hours after removal of the load, slab or beam under test recovers at least seventy-five percent (75%) of observed deflection.

3.11 PATCHING AND REPAIRS

A. It is the intent of these Specification to require that forms, mixture of concrete and workmanship shall be such that concrete surfaces, when exposed, will require minimal finishing as specified in Paragraph 3.05 above.

B. As soon as the forms have been stripped and the concrete surfaces exposed, fins and other projections shall be removed, recesses left by the removal of form ties (except where ties are left in place during sandblasting) shall be filled, and surface defects which do not impair structural strength shall be repaired. Clean all exposed concrete surfaces and adjoining work stained by leakage of concrete, to approval of the Engineer.

C. Immediately after removal of forms remove plugs and break off metal ties as required by Paragraph 3.06. Holes are then to be promptly filled upon stripping as follows: Moisten the hole with water, followed by a 1/16-inch brush coat of neat cement slurry mixed to the consistency of a heavy paste. Immediately plug the hole with a 1-1.5 mixture of cement and concrete sand mixed slightly damp to the touch (just short of "balling"). Hammer the grout into the hole until dense, and an excess of paste appears on the surface in the form of a spider web. Trowel smooth with heavy pressure. Avoid burnishing.

When patching or repairing exposed surfaces the same source of cement and sand as used in the parent concrete shall be employed. Adjust color if necessary by addition of proper amounts of white cement.

D. Rub lightly with a fine Carborundum stone at an age of one (1) to five (5) days if necessary to bring the surface down with the parent concrete. Exercise care to avoid damaging or staining the virgin skin of the surrounding parent concrete. Wash thoroughly to remove all rubbed matter.

E. Defective concrete and honeycombed areas shall be chipped down reasonably square and at least one-inch (1") deep to sound concrete by means of hand chisels or pneumatic chipping hammers. Irregular voids or surface stones need not be removed if they are sound, free of laitance, and firmly embedded in the parent concrete, subject to Engineer's final inspection. If honeycomb exists around reinforcement, chip to provide a clear space at least 3/8-inch wide all around the steel. For areas less than 1½-inch deep, the patch may be made in the same manner as described above for filling form tie holes, care being exercised to use adequately dry (non-trowelable) mixtures and to avoid sagging. Thicker repairs will require build-up in successive 1½-inch layers on successive days, each layer being applied (with slurry, etc.) as described above. The Contractor shall use non-shrink, non-metallic grout for these repairs.

3.12 INSTALLATION SCHEDULE

A. Concrete for structures shall have minimum compressive strength at twenty-eight (28) days of 4000 psi unless otherwise shown on the Drawings.

3.13 FIELD CONTROL

A. The Contractor shall advise the Engineer of his readiness to proceed at least 24 hours prior to each concrete placement. The Engineer will inspect the preparations for concreting including the preparation of previously placed concrete, the reinforcing and the alignment and tightness of formwork. No placement shall be made without the prior approval of the Engineer.

B. The Engineer may have cores taken from any questionable area in the concrete work such as construction joints and other locations as required for determination of concrete quality. The results of tests on such cores shall be the basis for acceptance, rejection or determining the continuation of concrete work.

C. The Contractor shall cooperate in the obtaining of cores by allowing free access to the work and permitting the use of ladders, scaffolding and such incidental equipment as may be required. The Contractor shall repair all core holes to the satisfaction of the Engineer. The work of cutting and testing the cores will be at the expense of the Owner if cores test satisfactorily and will be at the expense of the Contractor if cores test unsatisfactorily.

3.14 MISCELLANEOUS WORK

A. All bolts, anchors, miscellaneous metals or other sleeves and steel work required to be set in the concrete forms for attachment of masonry, structural, and mechanical equipment shall be set or installed under this Section. The Contractor shall be fully responsible for the setting of such materials in the forms and shall correct all such not installed in a proper location or manner at his own expense.

B. Electric conduits shall be installed in the concrete as required by the Drawings and specified herein. Outlet boxes and fixtures shall be located in reference to the final floor, wall or ceiling finish and shall be as secured that they will not be displaced by concrete placing.

C. Pipes or conduits for embedment, other than those merely passing through shall not be larger in outside diameter than one-third (1/3) the thickness of the slab, wall, or beam in which they are embedded, unless indicated on the Drawings, nor shall they be spaced closer than three (3) diameters on center, nor so located as to unduly impair the strength of the construction. All conduits and fixtures shall be located as approved by the Engineer.

D. Concrete foundations, supports and bases for all equipment and machinery shall be built to the equipment manufacturer's requirements, as approved by the Engineer, with anchor bolts installed.

E. All motor control centers and power control centers shall be installed on four-inch (4") minimum depth concrete bases as specified above.

3.15 PLACING REINFORCING STEEL

A. The Contractor shall comply with CRSI's "Manual of Standard Practice" for placing reinforcement. There shall be no field bending or straightening of reinforcement partially embedded in concrete.

END OF SECTION

THIS PAGE LEFT BLANK INTENTIONALLY

SECTION 04200

UNIT MASONRY (CMU)

PART 1 – GENERAL

1.01 SUMMARY

A. This Section includes unit masonry assemblies consisting of the following:

1. Concrete masonry units (CMUs).

1.02 SUBMITTALS

A. Product Data: For each type of product indicated.

B. Samples for each type and color of exposed masonry units and colored mortars.

C. Mix Designs: For each type of mortar and grout. Include description of type and proportions of ingredients.

1.03 PROJECT CONDITIONS

A. Cold-Weather Requirements: Do not use frozen materials or materials mixed or coated with ice or frost. Do not build on frozen substrates. Remove and replace unit masonry damaged by frost or by freezing conditions. Comply with cold-weather construction requirements contained in ACI 530.1/ASCE 6/TMS 602.

B. Hot-Weather Requirements: Comply with hot-weather construction requirements contained in ACI 530.1/ASCE 6/TMS 602.

1.04 QUALITY ASSURANCE

A. Fire Performance Characteristics: Where fire-resistance ratings are indicated for unit masonry work, provide materials and construction which are identical those assemblies whose fire endurance has been determined by testing in compliance with ASTM E 119.

PART 2 – PRODUCTS

2.01 CONCRETE MASONRY UNITS (CMUs)

A. Shapes: Provide special shapes for lintels, corners, jambs, sashes, movement joints, headers, bonding, and other special conditions.

B. Concrete Masonry Units: ASTM C 90

1. Unit Compressive Strength: Provide units with minimum average net-area compressive strength of 1900 psi.

2. Weight Classification: Normal weight.

2.02 MORTAR AND GROUT MATERIALS

A. Portland Cement: ASTM C 150, Type I or II, except Type III may be used for cold-weather construction.

B. Hydrated Lime: ASTM C 207, Type S.

C. Masonry Cement: ASTM C 91.

D. Aggregate for Mortar: ASTM C 144.

1. For joints less than ¼ inch thick, use aggregate graded with 100 percent passing the No. 16 sieve.

E. Aggregate for Grout: ASTM C 404.

F. Cold-Weather Admixture: Nonchloride, noncorrosive, accelerating admixture complying with ASTM C 494/C 494M, Type C, and recommended by manufacturer for use in masonry mortar of composition indicated.

G. Water: Potable.

2.03 REINFORCEMENT

A. Uncoated Steel Reinforcing Bars: ASTM A 615/ A 615M or ASTM A 996/A 996M, Grade 60

B. Masonry Joint Reinforcement: ASTM A 951; hot-dipped galvanized, carbon-steel wire for interior walls and hot-dip galvanized, carbon-steel wire for exterior walls.

1. Wire Size for Side Rods: W1.7 or 0.148-inch diameter.

2. Wire Size for Cross Rods: W1.7 or 0.148-inch diameter.

3. Wire Size for Veneer Ties: W1.7 or 0.148-inch diameter.

4. Spacing of Cross Rods, Tabs, and Cross Ties: Not more than 16 inches o.c.

5. Single-Wythe Masonry: Either ladder or truss type with single pair of side rods.

2.04 TIES AND ANCHORS

A. Materials:

1. Hot-Dip Galvanized, Carbon-Steel Wire: ASTM A 82; with ASTM A 153/A 153M, Class B-2 coating.

2. Steel Sheet, Galvanized after Fabrication: ASTM A 1008/A 1008M, Commercial Steel, hot-dip galvanized after fabrication to comply with ASTM A 153/A 153M.

3. Steel Plates, Shapes, and Bars: ASTM A 36/A 36M.

B. Wire Ties, General: Unless otherwise indicated, size wire ties to extend at least halfway through masonry but with at least 5/8-inch cover on outside face. Outer ends of wires are bent 90 degrees and extend 2 inched parallel to face masonry.

C. Individual Wire Ties: Rectangular units with closed ends and not less than 4 inches wide.

1. Wire: Fabricate from 3/16-inch diameter, hot-dip galvanized steel wire.

D. Adjustable Anchors for Connecting to Structure: Provide anchors that allow vertical or horizontal adjustment but resist tension and compression forces perpendicular to plane of wall.

1. Tie Section: Triangular-shaped wire tie, sized to extend within 1 inch of masonry face, made from 0.188-inch diameter, hot-dip galvanized steel wire.

E. Rigid Anchors: Fabricate from steel bars 1-1/2 inches wide by ¼ inch thick by 24 inches long, with ends turned up 2 inches or with cross pins.

1. Corrosion Protection: Hot-dip galvanized to comply with ASTM A 153/A 153M.

2.05 EMBEDDED FLASHING MATERIALS

A. Metal Flashing: Provide metal flashing, where flashing is exposed or partly exposed.

1. Metal Drip Edges: Fabricate from stainless steel. Extend at least 3 inches into wall and ½ inch out from wall, with outer edge bent down 30 degrees and hemmed.

2. Metal Flashing Terminations: Fabricate from stainless steel. Extend at least 3 inches into wall and out to exterior face of wall. At exterior face of wall, bend metal back on itself for ¾ inch and down into joint 3/8 inch to form a stop for retaining sealant backer rod.

3. Metal Expansion-Joint Strips: Fabricate from copper to shapes indicated.

B. Adhesives, Primers, and Seam Tapes for Flashings: Flashing manufacturer's standard products or products recommended by flashing manufacturer.

2.06 INSULATION

A. Foam insulation: Injected, Spray-Dried Polymeric Resin.

1. Applegate, C-Foam.

2. Core-Fill 500.

2.07 MASONRY CLEANERS

A. Acidic Cleaner: Manufacturer's standard-strength cleaner designed for removing mortar/grout stains from new masonry with damaging masonry. Use product approved for intended use by cleaner manufacturer and manufacturer of masonry units being cleaned.

2.08 MORTAR AND GROUT MIXES

A. General: Do not use admixtures, unless otherwise indicated.

1. Do not use calcium chloride in mortar or grout.

2. Limit cementitious materials in mortar for exterior and reinforced masonry to Portland cement and lime.

3. Add cold-weather admixture (if used) at same rate for all mortar that will be exposed to view, regardless od weather conditions, to ensure that mortar color is consistent.

B. Mortar for Unit Masonry: Comply with ASTM C 270, Proportion Specification.

C. Grout for Unit Masonry: Comply with ASTM C 476.

1. Use grout of type indicated or, if not otherwise indicated, of type (fine or coarse) that will comply with Table 1.15.1 in ACI 530.1/ASCE 6/TMS 602 for dimensions of grout spaces and pour height.

2. Provide grout with a slump of 8 to 11 inches as measured according to ASTM C 143/C 143M.

PART 3 – EXECUTION

3.01 INSTALLATION, GENERAL

A. Use full-size units without cutting if possible. If cutting is required, cut units with motor-driven saws; provide clean, sharp, unchipped edges. Allow units to dry before laying unless wetting of units is specified. Install cut units with cut surfaces and, where possible, cut edges concealed.

B. Select and arrange units for exposed unit masonry to produce a uniform blend of colors and textures.

C. Wetting of Masonry: Wet masonry before laying if initial rate of absorption exceeds 30 g/30 sq. in. per minute when tested per ASTM C 67. Allow units to absorb water so they are damp but not wet at time of laying.

D. Comply with tolerances in ACI 530.1/ASCE 6/TMS 602 and with the following:

1. For conspicuous vertical lines, such as external corners, door jambs, reveals, and expansion and control joints, do not vary from plumb by more than 1/8 inch in 10 feet, ¼ inch in 20 feet, or ½ inch maximum.

2. For conspicuous horizontal lines, such as lintels, sills, parapets, and reveals, do not vary from level by more than 1/8 inch in 10 feet, ¼ inch in 20 feet, or ½ inch maximum.

3.02 LAYING MASONRY WALLS

A. Lay out walls in advance for accurate spacing of surface bond patterns with uniform joint thicknesses and for accurate location of openings, movement-type joints, returns, and offsets. Avoid using less-than-half-size units, particularly at corners, jambs, and, where possible, at other locations.

B. Bond Pattern for Exposed Masonry: Unless otherwise indicated, lay exposed masonry in running bond; do not use units with less than nominal 4-inch horizontal face dimensions at corners or jambs.

C. Built-in Work: As construction progresses, build in items specified in this and other Sections. Fill in solidly with masonry around built-in items.

D. Fill space between steel frames and masonry solidly with mortar, unless otherwise indicated.

E. Fill cores in hollow concrete masonry units with grout 24 inches under bearing plates, beams, lintels, posts, and similar items, unless otherwise indicated.

3.03 MORTAR BEDDING AND JOINTING

A. Lay hollow concrete masonry units as follows:

1. With face shells fully bedded in mortar and with head joints of depth equal to bed joints.

2. With webs fully bedded in mortar in all courses of piers, columns, and pilasters.

3. With webs fully bedded in mortar in grouted masonry, including starting course on footings.

4. With entire units, including areas under cells, fully bedded in mortar at starting course on footings where cells are not grouted.

B. Lay solid masonry units with completely filled beds and head joints; butter ends with sufficient mortar to fill head joints and shove into place. Do not deeply furrow bed joints or slush head joints.

1. Maintain joint thicknesses indicated except for minor variations required to maintain bond alignment. If not indicated, lay walls with ¼ to 3/8-inch thick joints.

2. Where epoxy-mortar pointed joints are indicated, rake out setting mortar to a uniform depth of ¼ inch and point with epoxy mortar.

C. Tool exposed joints slightly concave when thumbprint hard, using a jointer larger that joint thickness, unless otherwise indicated.

D. Cut joints flush for masonry walls to receive plaster or other direct-applied finishes (other than paint), unless otherwise indicated.

3.04 MASONRY-CELL INSULATION

A. Pout granular insulation into cavities to fill void spaces. Maintain inspection ports to show presence of insulation at extremities of each pour area. Close the ports after filling has been confirmed. Limit the fall of insulation to 1 story in height, but not more than 20 feet.

3.05 MASONRY JOINT REINFORCEMENT

A. General: Install in mortar with a minimum cover of 5/8 in on exterior side of walls, ½ inch elsewhere. Lap reinforcement a minimum of 6 inches.

B. Interrupt joint reinforcement at control and expansion joints, unless otherwise indicated.

3.06 FLASHING, WEEP HOLES, CAVITY DRAINAGE, AND VENTS

A. General: Install embedded flashing and weep holes in masonry at shelf angles, lintels, ledges, other obstructions to downward flow of water in wall, and where is indicated. Install vents at shelf angles, ledges and other obstructions to upward flow of air in cavities, and where indicated.

B. Install flashing as follows, unless otherwise indicated:

1. Prepare masonry surfaces so they are smooth and free from projections that could puncture flashing. Where flashing is within mortar joint, place through-wall flashing on sloping bed of mortar and cover with mortar. Before covering with mortar, seal penetrations in flashing as recommended by flashing manufacturer.

2. At lintels and shelf angles, extend flashing a minimum of 6 inches into masonry at each end. At heads and sills, extend flashing 6 inches at ends and turn up not less than 2 inches to form end dams.

3. Install metal drip edges beneath flexible flashing at exterior face of wall. Stop flexible flashing ½ inch back from outside face of wall and adhere flexible flashing to top of metal drip edge.

4. Install metal flashing termination beneath flexible flashing at exterior face of wall. Stop flexible flashing ½ inch back from outside face of wall and adhere flexible flashing to top of metal flashing termination.

3.07 REINFORCED UNIT MASONRY INSTALLATION

A. Temporary Formwork and Shores: Construct formwork and shores as needed to support reinforced masonry elements during construction.

1. Construct formwork to provide shape, line, and dimensions of completed masonry as indicated. Make forms sufficiently tight to prevent leakage of mortar and grout. Brace, tie, and support forms to maintain position and shape during construction and curing of reinforced masonry.

2. Do not remove forms and shores until reinforced masonry members have hardened sufficiently to carry their own weight and other temporary loads that may be placed on them during construction.

B. Placing Reinforcement: Comply with requirements in ACI 530.1/ASCE 6/TMS 602.

C. Grouting: Do not place grout until entire height of masonry to be grouted has attained enough strength to resist grout pressure.

1. Comply with requirements in ACI 530.1/ASCE 6/TMS 602 for cleanouts and for grout placement, including minimum grout space and maximum pour height.

2. Limit height of vertical grout pours to not more than 60 inches.

3.08 CLEANING

A. In-Progress Cleaning: Clean unit masonry as work progresses by dry brushing to remove mortar fins and smears before tooling joints.

B. Final Cleaning: After mortar is thoroughly set and cured, clean exposed masonry as follows:

1. Test cleaning methods on sample wall panel; leave one-half of panel uncleaned for comparison purposes.

2. Protect adjacent surfaces from contact with cleaner.

3. Wet wall surfaces with water before applying cleaners; remove cleaners promptly by rinsing surfaces thoroughly with clear water.

4. Clean masonry with a proprietary acidic cleaner applied according to manufacturer’s written instructions.

3.09 MASONRY WASTE DISPOSAL

A. Waste Disposal as Fill Material: Dispose of clean masonry waste, including excess or soil-contaminated sand, waste mortar, by removing them from the site.

END OF SECTION 04200

SECTION 05400

COLD-FORMED METAL FRAMING

PART 1 – GENERAL

1.01 SUMMARY

A. This Section includes the following:

1. Exterior load-bearing wall framing.

2. Interior load-bearing wall framing.

3. Exterior non-load-bearing, curtain-wall framing.

4. Floor joist framing.

5. Roof trusses.

1.02 PERFORMANCE REQUIREMENTS

A. Structural Performance: Provide cold-formed metal framing capable of withstanding design loads without deflections greater than the following:

1. Exterior Load-Bearing Wall Framing: Horizontal deflection of 1/240 of the wall height.

2. Interior Load-Bearing Wall Framing: Horizontal deflection of 1/240 of the wall height.

3. Exterior Non-Load-bearing, Curtain-Wall Framing: Horizontal deflection of 1/240 of the wall height.

4. Floor Joist Framing: Vertical deflection of 1/240 of the span.

5. Roof Trusses: Vertical deflection of 1/240 of the span.

1.03 SUBMITTALS

A. Product Data: For each product indicated.

B. Shop Drawings: Include layout, spacings, sizes, thicknesses, and types of cold-formed metal framing; fabrication; and fastening and anchorage details, including mechanical fasteners.

C. Mill certificates.

D. Welder certificates.

E. Research/evaluation reports.

1.04 QUALITY ASSURANCE

A. Comply with AISI's "Specification for the Design of Cold-Formed Steel Structural Members" for calculating structural characteristics of cold-formed metal framing.

1. Engineering Responsibility: Engage a qualified professional engineer to prepare design

calculations, Shop Drawings, and other structural data.

B. Mill certificates signed by steel sheet producer or test reports from a qualified independent testing agency.

C. Welding: Qualify procedures and personnel according to AWS D1.1, "Structural Welding Code--Steel," and AWS D1.3, "Structural Welding Code--Sheet Steel."

D. Fire-Test-Response Characteristics: Where metal framing is part of a fire-resistance-rated assembly, provide framing identical to that of assemblies tested for fire resistance per ASTM E 119 by a testing agency acceptable to authorities having jurisdiction.

1. Fire-Resistance Ratings: Indicated by GA File Numbers in GA-600, "Fire Resistance Design Manual," or by design designations from UL's "Fire Resistance Directory" or from the listings of another testing agency.

E. Comply with HUD's "Prescriptive Method for Residential Cold-Formed Steel Framing."

PART 2 – PRODUCTS

2.01 MANUFACTURERS

A. Available Manufacturers: Subject to compliance with requirements, manufacturers offering products that may be incorporated into the Work include, but are not limited to, the following:

B. Manufacturers: Subject to compliance with requirements, provide products by one of the following:

1. Allied American Studco, Inc.
2. Angeles Metal Systems.
3. California Expanded Metal Products Co.
4. California Metal Systems, Inc.
5. Clark Steel Framing Industries.
6. Consolidated Fabricators Corp.
7. Consolidated Systems, Inc.
8. Dale Industries, Inc.
9. Design Shapes in Steel.
10. Dietrich Industries, Inc.
11. Knorr Steel Framing Systems.
12. MarinoWare; Div. of Ware Industries, Inc.
13. Scafco Corp.
14. Steel Construction Systems.
15. Steel Developers, LLC.

16. Steeler, Inc.

17. Studco of Hawaii, Inc.

18. Super Stud Building Products, Inc.

19. Unimast, Inc.

20. United Metal Products, Inc.

21. Western Metal Lath.

2.02 MATERIALS

A. Steel Sheet: ASTM A 653/A 653M, structural steel, G60 (Z180) zinc coating, Grade 33 (230) for minimum uncoated steel thickness of 0.0428 inch (1.09 mm) and less; Grade 50 (340) for minimum uncoated steel thickness of 0.0538 inch (1.37 mm) and greater.

B. Wall Framing: Manufacturer's standard steel studs, of web depths indicated, with stiffened flanges, complying with ASTM C 955, and as follows:

1. Minimum Uncoated-Steel Thickness: [0.0329 inch (0.84 mm)].

2. Flange Width: [1-5/8 inches (41 mm)].minimum

3. Section Properties: submit Per Manufacturer

4. Track: Manufacturer's standard U-shaped steel track, unpunched, with straight flanges, complying with ASTM C 955, manufacturer's standard flange width, and minimum uncoated-steel thickness matching steel studs.

C. Joist Framing: Manufacturer's standard C-shaped steel joists, of web depths indicated, unpunched or punched, with stiffened flanges, complying with ASTM C 955, and as follows:

1. Minimum Uncoated-Steel Thickness: [0.0329 inch (.084 mm)].

2. Flange Width: [1-5/8 inches (41 mm)], minimum.

3. Track: Manufacturer's standard U-shaped steel joist track, of web depths indicated, unpunched, with unstiffened flanges, complying with ASTM C 955, and as follows:

a. Minimum Uncoated-Steel Thickness: Matching steel joists.

b. Flange Width: [2 inches (51 mm)].minimum

D. Roof Truss Members: Manufacturer's standard C-shaped steel sections, of web depths indicated, unpunched, with stiffened flanges, complying with ASTM C 955, of minimum uncoated-steel thickness and flange width indicated on Shop Drawings.

2.03 ACCESSORIES AND MISCELLANEOUS MATERIALS

A. Fabricate steel-framing accessories of the same material and finish used for framing members, with a minimum yield strength of 33,000 psi (230 MPa), of manufacturer's standard thickness and configuration, unless otherwise indicated.

B. Steel Shapes and Clips: ASTM A 36/A 36M, zinc coated by hot-dip process according to ASTM A 123.

C. Anchor Bolts: ASTM F 1554, Grade 36 or 55 or as per drawings, threaded carbon-steel hex-headed bolts and carbon-steel nuts; and flat, hardened-steel washers; zinc coated by hot-dip process according to ASTM A 153/A 153M, Class C.

D. Expansion Anchors: Fabricated from corrosion-resistant materials, with capability to sustain, without failure, a load equal to 5 times design load, as determined by testing per ASTM E 488 conducted by a qualified independent testing agency.

E. Power-Actuated Anchors: Fastener system of type suitable for application indicated, fabricated from corrosion-resistant materials, with capability to sustain, without failure, a load equal to 10 times design load, as determined by testing per ASTM E 1190 conducted by a qualified independent testing agency.

F. Mechanical Fasteners: Corrosion-resistant-coated, self-drilling, self-threading steel drill screws.

G. Galvanizing Repair Paint: SSPC-Paint 20 or DOD-P-21035 or ASTM A 780.

H. Cement Grout: Portland cement, ASTM C 150, Type I; and clean, natural sand, ASTM C 404. Mix at ratio of 1 part cement to 2-1/2 parts sand, by volume, with minimum water required for placement and hydration.

I. Thermal Insulation: ASTM C 665, Type I, unfaced mineral-fiber blankets produced by combining glass or slag fibers with thermosetting resins.

PART 3 – EXECUTION

3.01 INSTALLATION

A. Preparation: Grout bearing surfaces uniform and level to ensure full contact of bearing flanges or track webs on supporting concrete or masonry construction. contact of bearing flanges or track webs on supporting concrete or masonry construction.

B. Install cold-formed metal framing and accessories plumb, square, and true to line, and with connections securely fastened, according to ASTM C 1007, manufacturer's written recommendations, and requirements in this Section.

1. Cut framing members by sawing or shearing; do not torch cut.

2. Fasten cold-formed metal framing members by welding or screw fastening, as standard with fabricator. Wire tying of framing members is not permitted.

3. Install framing members in one-piece lengths.

4. Install temporary bracing and supports to secure framing and support loads comparable in intensity to those for which structure was designed.

5. Install insulation in built-up exterior framing members, such as headers, sills, boxed joists, and multiple studs at openings, that are inaccessible on completion of framing work.

6. Fasten hole reinforcing plate over web penetrations that exceed size of manufacturer's standard punched openings.

C. Erection Tolerances: Install cold-formed metal framing level, plumb, and true to line to a maximum allowable tolerance variation of 1/8 inch in 10 feet (1:960) and as follows:

1. Space individual framing members no more than plus or minus 1/8 inch (3 mm) from plan location. Cumulative error shall not exceed minimum fastening requirements of sheathing or other finishing materials.

D. Load-Bearing Wall Installation: Install continuous top and bottom tracks sized to match studs. Align tracks accurately and securely anchor at corners and ends. Squarely seat studs against webs of top and bottom tracks. Space studs as indicated, set plumb, align, and fasten both flanges of studs to top and bottom tracks.

1. Align studs vertically where wall-framing continuity is interrupted by floor framing. Where studs cannot be aligned, continuously reinforce track to transfer loads.

2. Align floor and roof framing over studs. Where framing cannot be aligned, continuously reinforce track to transfer loads.

3. Anchor studs abutting structural columns or walls, including masonry walls, to supporting structure as indicated.

4. Install headers over wall openings wider than stud spacing. Locate headers above openings as indicated. Fabricate headers of compound shapes indicated or required to transfer load to supporting studs, complete with clip-angle connectors, web stiffeners, or gusset plates.

5. Frame wall openings with not less than a double stud at each jamb of frame as indicated on Shop Drawings.

6. Install runner tracks and jack studs above and below wall openings. Anchor tracks to jamb studs with clip angles or by welding, and space jack studs same as full-height wall studs.

7. Install horizontal bridging in stud system, spaced as indicated on Shop Drawings. Fasten at each stud intersection.

8. Install miscellaneous framing and connections, including supplementary framing, blocking, bracing, web stiffeners, clip angles, continuous angles, anchors, and fasteners, to provide a complete and stable wall-framing system.

E. Non-Load-Bearing, Curtain-Wall Installation: Install continuous tracks sized to match studs. Align tracks accurately and securely anchor to supporting structure. Space studs as indicated; set plumb, align, and fasten both flanges of studs to track, unless otherwise indicated.

1. Isolate non-load-bearing steel framing from building structure to prevent transfer of vertical loads while providing lateral support.

2. Install horizontal bridging in curtain-wall studs, spaced in rows indicated on Shop Drawings but not more than 54 inches (1370 mm) apart. Fasten at each stud intersection.

3. Install miscellaneous framing and connections, including stud kickers, web stiffeners, clip angles, continuous angles, anchors, fasteners, and stud girts, to provide a complete and stable curtain-wall-framing system.

F. Joist Installation: Install, align, and securely anchor perimeter joist track sized to match joists as indicated on Shop Drawings. Install joists bearing on supporting frame, level, straight, and plumb; adjust to final position, brace, and reinforce. Fasten to both flanges of joist track.

1. Install joists over supporting frame with a minimum end bearing of 1-1/2 inches (38 mm). Reinforce ends and bearing points of joists as indicated on Shop Drawings.

2. Space joists not more than 2 inches (51 mm) from abutting walls and at spacings indicated.

3. Frame openings with built-up joist headers consisting of joist and joist track, nesting joists, or another combination of connected joists if indicated.

4. Install joist reinforcement at interior supports with single, short length of joist section located directly over interior support, with lapped joists of equal length to joist reinforcement, or as indicated. Install web stiffeners to transfer axial loads of walls above.

5. Install bridging at each end of joists and at intervals indicated. Fasten bridging at each joist intersection as indicated.

6. Secure joists to load-bearing interior walls to prevent lateral movement of bottom flange.

7. Install miscellaneous joist framing and connections, including web stiffeners, closure pieces, clip angles, continuous angles, hold-down angles, anchors, and fasteners, to provide a complete and stable joist-framing assembly.

G. Truss Installation: Install, bridge, and brace trusses according to Shop Drawings. Do not alter, cut, or remove framing members or connections of trusses.

1. Erect trusses with plane of truss webs plumb and parallel to each other, align, and accurately position at spacings indicated.

2. Erect trusses without damaging framing members or connections.

3. Align webs of bottom chords and load-bearing studs or continuously reinforce track to transfer loads to structure. Anchor trusses securely at all bearing points.

4. Install continuous bridging and permanently brace trusses as indicated.

H. Galvanizing Repairs: Prepare and repair damaged galvanized coatings on fabricated and installed cold-formed metal framing with galvanized repair paint according to ASTM A 780 and manufacturer's written instructions.

3.02 FIELD QUALITY CONTROL

A. Testing: Owner will engage a qualified independent testing agency to perform field quality-control testing.

1. Field and shop welds will be subject to testing and inspection.

2. Remove and replace Work that does not comply with specified requirements.

3. Additional testing and inspecting, at Contractor's expense, will be performed to determine compliance of corrected Work with specified requirements.

END OF SECTION 05400

SECTION 05500 - MISCELLANEOUS METALWORK

PART 1 -- GENERAL

1.1 THE REQUIREMENT

A. The CONTRACTOR shall provide miscellaneous metalwork and appurtenances, complete and in place, in accordance with the Contract Documents.

1.2 REFERENCE SPECIFICATIONS, CODES, AND STANDARDS

A. Federal Specifications

MIL-G-18015 A (3)	(Ships) Aluminum Planks (6063-T6)
MIL-A-907E	Anti seize Thread Compound, High Temperature.

B. Commercial Standards

AA-M32C22A41	Aluminum Assn
AASHTO HS-20	Truck Loading
AISC	Manual of Steel Construction
AISI	Design of Light Gauge, Cold-Formed Steel Structural Members.
ASTM A 36	Carbon Structural Steel
ASTM A 48	Gray Iron Castings
ASTM A 53	Pipe, Steel, Black and Hot-Dipped, Zinc-Coated, Welded and Seamless
ASTM A 123	Zinc (Hot-Dip Galvanized) Coatings on Iron and Steel Products
ASTM A 153	Zinc Coating (Hot-Dip) on Iron and Steel Hardware
ASTM A 193	Alloy Steel and Stainless Steel Bolting Materials for High Temperature Service
ASTM A 194	Carbon and Alloy Steel Nuts for Bolts for High Pressure and High Temperature Service
ASTM A 307	Carbon Steel Bolts and Studs, 60,000 psi Tensile Strength
ASTM A 325	Structural Bolts, Steel, Heat Treated, 120/105 ksi Minimum Tensile Strength
ASTM A 500	Cold-Formed Welded and Seamless Carbon Steel Structural Tubing in Rounds and Shapes
ASTM A 992	Steel for Structural Shapes for Use in Building Framing
ANSI/AWS D1.1	Structural Welding Code - Steel
ANSI/AWS D1.2	Structural Welding Code - Aluminum
ANSI/AWS QC1	Qualification and Certification of Welding Inspectors

1.3 CONTRACTOR SUBMITTALS

A. Furnish submittals in accordance with Section 01300 - Contractor Submittals.

B. Shop Drawings: Shop Drawings shall conform to AISC recommendations and specifications and shall show holes, etc. required for other parts of the WORK. Drawings shall include complete details of members and connections, anchor bolt layouts, schedules for fabrication procedures, and diagrams for the sequence of erection.

1. Layout drawings for grating, showing the direction of span, type and depth of grating, size and shape of grating panels, seat angle details, and details of grating hold down fasteners. Load and deflection tables shall be submitted for each style and depth of grating used.

2. An ICC-ES report listing the ultimate load capacity in tension and shear for each size and type of concrete anchor. CONTRACTOR shall submit manufacturer's recommended installation instructions and procedures for adhesive anchors. Upon review by ENGINEER, these instructions shall be followed specifically.

3. No substitution for the indicated adhesive anchors will be considered unless accompanied with ICC-ES report verifying strength and material equivalency, including temperature at which load capacity is reduced to 90 percent of that determined at 75 degrees F.

1.4 QUALITY ASSURANCE

A. Weld procedures and welder qualifications shall be available in the CONTRACTOR's field office for review.

PART 2 -- PRODUCTS

2.1 GENERAL REQUIREMENTS

A. Steel

Wide Flange Shapes	ASTM A 992
Shapes, Plates, Bars	ASTM A 36
Pipe, Pipe Columns, Bollards	ASTM A 53, Type E or S, Grade B standard weight unless indicated otherwise
HSS	ASTM A 500 Grade B

B. Corrosion Protection: Unless otherwise indicated, fabricated steel metalwork which will be used in a corrosive environment and/or will be submerged in water/wastewater shall be coated in accordance with Section 09800 - Protective Coating and shall not be galvanized prior to coating. Other miscellaneous steel metalwork shall be hot-dip galvanized after fabrication.

C. Stainless Steel: Unless otherwise indicated, stainless steel metalwork and bolts shall be of Type 316 stainless steel.

D. Aluminum: Unless otherwise indicated, aluminum metalwork shall be of Alloy 6061-T6. Aluminum in contact with concrete, masonry, wood, porous materials, or dissimilar metals shall have contact surfaces coated in accordance with Section 09800.

E. Cast Iron: Unless otherwise indicated, iron castings shall conform to the requirements of ASTM A 48, Class 50B or better.

2.2 METAL GRATING

A. General: Metal grating shall be of the design, sizes, and types indicated. Grating shall be completely banded at edges and cutouts using material and cross section equivalent to the bearing bars. Such banding shall be welded to each cut bearing bar. Grating shall be supported around an opening by support members. Where grating is supported on concrete, embedded support angles matching grating material shall be used, unless indicated otherwise. Such angles shall be mitered and welded at corners.

1. Pieces of grating shall be fastened in 2 locations to each support.

2. Where grating forms the landing at the top of a stairway, the edge of the grating that forms the top riser shall have an integral non-slip nosing, width equal to that of the stairway.

3. Where grating depth is not given, grating shall be provided that will be within allowable stress levels and which shall not exceed a deflection of 1/4-inch or the span divided by 180, whichever is less. For standard duty plank and safety grating, the loading to be used for determining stresses and deflections shall be the uniform live load of the adjacent floor or 100 psf, whichever is greater or a concentrated load of 1000 pounds. For heavy duty grating, the loading used for determining stresses and deflections shall be AASHTO HS-20.

B. Material

1. Except where indicated otherwise, bar grating shall be fabricated entirely of aluminum as follows: Bearing and banding bars, alloy 6061-T6; cross bars, alloy 6063-T5.

2. Plank grating shall be fabricated of aluminum alloy 6063-T6.

3. Grating that may be partially or wholly submerged shall be fabricated entirely of stainless steel, Type 316.

C. Standard-Duty Grating

1. No single piece of grating shall weigh more than 80 pounds, unless indicated otherwise. Standard duty grating shall be serrated bar grating.

2. Cross bars shall be welded or mechanically locked tightly into position so that there is no movement allowed between bearing and cross bars.

D. Plank Grating

1. Plank grating shall be extruded in 6-inch widths with a minimum of 6 integral 1-bar type bearing bars per plank. The top surface shall be solid with raised ribs, unless indicated otherwise. The planks shall have continuous tongue and groove type interlock at each side, except that interlocking planks shall be arranged so that any 4-foot wide section may be removed independently from the other grating sections.

E. Plank grating shall be provided with a clear anodized finish.

2.3 BOLTS AND ANCHORS

A. Standard Service (Non-Corrosive Application): Unless otherwise indicated, bolts, anchor bolts, washers, and nuts shall be Type 316 stainless steel, in accordance with Paragraph 2.7 C herein. Except as otherwise indicated, steel for bolt material, anchor bolts, and cap screws shall be in accordance with the following:

1. Structural connections: Type 316 stainless steel.

2. Anchor Bolts: Type 316 stainless steel.

3. High strength bolts where indicated: ASTM A 325.

4. Pipe and equipment flange bolts: Type 316 stainless steel.

B. Corrosive Service: Bolts, nuts, and washers in the locations listed below shall be stainless steel as indicated.

1. Buried locations.

2. Submerged locations.

3. Locations subject to seasonal or occasional flooding.

4. Inside hydraulic structures below the top of the structure.

5. Inside buried vaults, manholes, and structures that do not drain through a gravity sewer or to a sump with a pump.

6. Chemical handling areas.

7. Inside trenches, containment walls, and curbed areas.

8. Locations indicated by the Contract Documents or designated by the ENGINEER to be provided with stainless steel bolts.

C. Unless otherwise indicated, stainless steel bolts, anchor bolts, nuts, and washers shall be Type 316 stainless steel, Class 2, conforming to ASTM A 193 for bolts and to ASTM A 194 for nuts. Threads on stainless steel bolts shall be protected with an antiseize lubricant suitable for submerged stainless steel bolts, to meet government specification MIL-A-907E. Buried bolts in poorly drained soil shall be coated the same as the buried pipe.

1. Antiseize lubricant shall be classified as acceptable for potable water use by the NSF.

2. Antiseize lubricant shall be "PURE WHITE" by Anti-Seize Technology, Franklin Park, IL, 60131, AS-470 by Dixon Ticonderoga Company, Lakehurst, NJ, 08733, or equal.

D. Bolt Requirements

1. The bolt and nut material shall be free-cutting steel.

2. The nuts shall be capable of developing the full strength of the bolts. Threads shall be Coarse Thread Series conforming to the requirements of the American Standard for Screw Threads. Bolts and cap screws shall have hexagon heads and nuts shall be Heavy Hexagon Series.

3. Bolts and nuts shall be installed with washers fabricated of material matching the base material of bolts, except that hardened washers for high strength bolts shall conform to the requirements of the AISC Specification. Lock washers fabricated of material matching the bolts shall be installed where indicated.

4. The length of each bolt shall be such that the bolt extends at least 1/8-inch beyond the outside face of the nut before tightening, except for anchor bolts, which shall be flush with the face of the nut before tightening.

E. Adhesive Anchors and Rods: Unless otherwise indicated, drilled concrete or masonry anchors shall be adhesive anchor and rod systems as specified below.

1. Adhesive anchors and rods shall employ an injectable adhesive. Adhesive shall be furnished in side-by-side refill packets that keep components separate prior to installation. Side-by-side refill packets shall accept static mixing nozzles which thoroughly combines components and allows injection directly into drilled hole. Only injection tools and static mixing nozzles as recommended by manufacturer shall be used. Manufacturer's recommended instructions shall be followed. Injection adhesive shall be HILTI HIT-HY 150 MAX-SD or equal.

2. Anchor rods shall be furnished with chamfered ends so that either end will accept a nut and washer. Alternatively, anchor rods shall be furnished with at 45 degree chisel end on one end to allow for easy insertion into an adhesive – filled hole. Anchor rods shall be manufactured to meet ISO 898 Class 5.8, ASTM A193 Grade B7 (high strength carbon steel anchor). Anchor rods shall be HILTI HAS Rods or equal.

F. Non-Shrink Grouted Anchors: Anchors, if indicated or permitted, shall be grouted with a non-shrink cementitious grout in accordance with the manufacturer's recommendation. Embedment depth shall be as the manufacturer recommends for the load to be supported. Non-shrink grout material shall be Class B or C in accordance with Section 03315 - Grout.

2.4 ACCESS HATCHES

A. Aluminum hatch covers and frames for wet wells and valve boxes shall be designed to support a 300 psf live load with a maximum deflection of 1/150th of the span. All hardware shall be Type 316 Stainless Steel.

B. Channel frame shall be ¼ inch thick extruded aluminum with bend down anchor tabs around the perimeter.

C. Covers shall be ¼ inch thick aluminum plate with diamond pattern. Covers shall be hinged and shall have a recessed padlock hasp. Contractor shall provide two brass padlocks, keyed alike. Covers shall be equipped with a hold open arm that automatically locks the covers in the open position.

D. Hinges shall be heavy forged Type 316 stainless steel and shall be specifically designed for horizontal installation. Hinges shall be through bolted to the cover with tamperproof Type 316 stainless steel lock bolts and shall be through bolted to the frame with Type 316 stainless steel bolts and locknuts. Hinges, each having a minimum ¼ inch diameter Type 316 stainless steel pin, shall pivot so the cover does not protrude into the channel frame.

E. Lifting mechanism shall have the required number and size of compression spring operators enclosed in telescopic tubes to provide, smooth, easy, and controlled cover operation throughout the entire arc of opening and to act as a check in retarding downward motion of the cover when closing. The upper tube shall be the outer tube to prevent accumulation of moisture, grit, and debris inside the lower tube assembly. The lower tube shall interlock with a flanged support shoe fastened to a formed ¼ inch gusset support plate. Springs and spring tubes shall be Type 316 stainless steel.

F. Factory finish for frame and covers shall be mill finish aluminum with bituminous coating applied to the exterior of the frame.

G. Stainless Steel cable holders including the cable hooks shall be fabricated from type 316 stainless steel plate. Sharp corner and edges shall be ground smooth to prevent abrasion and cutting of electrical cable insulation. The cable holder shall be of sufficient length and strength to provide support for each separate cable.

H. Covers shall be Halliday Products, Model W1S (single door), Model W2S (double door), or

approved equal.

PART 3 -- EXECUTION

3.1 FABRICATION AND INSTALLATION REQUIREMENTS

A. Fabrication and Erection: Except as otherwise indicated, the fabrication and erection of structural steel shall conform to the requirements of the American Institute of Steel Construction "Manual of Steel Construction." Structural elements shall be fabricated and assembled in the shop to the greatest extent possible. All field connections shall be bolted unless shown otherwise on the structural drawings. All holes in steel shall be mechanically drilled or punched. No flame cutting or enlarging will be allowed without specific approval of the ENGINEER.

3.2 WELDING

A. Method: Welding shall be by the metal-arc method or gas-shielded arc method as described in the American Welding Society's "Welding Handbook" as supplemented by other pertinent standards of the AWS. Qualification of welders shall be in accordance with the AWS Standards governing same.

B. Quality: In assembly and during welding, the component parts shall be adequately clamped, supported, and restrained to minimize distortion and for control of dimensions. Weld reinforcement shall be as indicated by the AWS Code. Upon completion of welding, weld splatter, flux, slag, and burrs left by attachments shall be removed. Welds shall be repaired to produce a workmanlike appearance, with uniform weld contours and dimensions. Sharp corners of material that is to be painted or coated shall be ground to a minimum of 1/32-inch on the flat.

3.3 GALVANIZING

A. Structural steel plate shapes, bars, and fabricated assemblies required to be galvanized shall, after the steel has been thoroughly cleaned of rust and scale, be galvanized in accordance with the requirements of ASTM A 123. Any galvanized part that becomes warped during the galvanizing operation shall be straightened. Bolts, anchor bolts, nuts, and similar threaded fasteners, after being properly cleaned, shall be galvanized in accordance with the requirements of ASTM A 153.

B. Field repairs to damaged galvanizing shall be made by preparing the surface and applying a coating.

1. Surface preparation shall consist of removing oil, grease, soil, and soluble material by cleaning with water and detergent (SSPC SP1) followed by brush off blast cleaning (SSPC SP7), over an area extending at least 4-inches into the undamaged area.

2. Coating shall be applied to at least 3-mils dry film thickness. Use Zinc-Clad XI by Sherwin-Williams, Galvax by Alvin Products, or Galvite by ZRC Worldwide.

3.4 DRILLED ANCHORS

A. Drilled anchors and reinforcing bars shall be installed in strict accordance with the manufacturer's instructions. Holes shall be roughened with a brush on a power drill, cleaned and dry. Drilled anchors shall not be installed until the concrete has reached the required 28-day compressive strength. Adhesive anchors shall not be loaded until the adhesive has reached its indicated strength in accordance with the manufacturer's instructions. The set anchor may not be disturbed or loaded before the specified curing time.

B. Holes in connection plates shall be no more than 1/16” larger than the bolt diameter. If larger holes are needed for erection purposes the contractor shall provide plate washers welded to the connection plate to transfer the bolt load.

C. All abandoned holes shall be filled with epoxy grout.

D. Create a template at each adhesive anchor connection location prior to fabricating holes in connection plates. Template shall be made by locating existing rebar with an approved reinforcement detection system. Anchors may be repositioned a maximum of ½" as required to avoid conflicts with existing reinforcing.

END OF SECTION 05500

SECTION 08110

STEEL DOORS AND FRAMES

PART 1 -- GENERAL

1.01 THE REQUIREMENT

The CONTRACTOR shall provide steel doors, frames, and related items, complete and operable, in accordance with the Contract Documents.

The CONTRACTOR shall provide two 3’-0” wide and 7’-0” tall doors that comply with IBC 1008.1.1.

Door locks shall not require the use of a key, special device or special knowledge to open in the direction of egress per IBC 1008.1.9.

Doors shall be equipped with automatic closers.

Doors shall be operable from the building interior with ONLY one releasing operation per IBC 1008.1.9.5.

1.02 REFERENCE SPECIFICATIONS, CODES, AND STANDARDS

Commercial Standards

ASTM A 366	Steel, Carbon, Cold-Rolled Sheet, Commercial Quality
ASTM A 653	Steel Sheet, Zinc-Coated (Galvanized) or Zinc-Iron Alloy-Coated (Galvanized) by the Hot-Dip Process
ASTM B 117	Standard Practice for Operating Salt Spray (Fog) Apparatus
ASTM D 1735	Standard Practice for Testing Water Resistance of Coatings Using Water Fog Apparatus
ASTM E 90	Standard Test Method for Laboratory Measurement of Airborne Sound Transmission Loss of Building Partitions and Elements
ANSI A115 Series	Door and Frame Preparation
ANSI A156 Series	Door Controls - Closers
UL	Underwriters' Laboratories, Inc.

Trade Standards

National Association of Architectural Metal Manufacturers (NAAMM).

Manufacturers' Standards: In addition to the standards listed above, steel door and frame installation shall be in accordance with the manufacturer's published recommendations and specifications.

1.03 CONTRACTOR SUBMITTALS

Furnish submittals in accordance with Section 01300 - Contractor Submittals.

Shop Drawings

Show details of the products and systems and connections to adjoining materials. Include schedules showing sizes, types, and locations of door louvers and glass and manufacturer's installation instructions.

Manufacturers' literature.

Calculations by a registered civil or structural engineer showing that the doors, frames, and structural connections are designed to meet code requirements and loads.

PART 2 -- PRODUCTS

2.01 MATERIALS AND FABRICATION - GENERAL

Shop Fabrication and Assembly: Steel doors and frames shall be shop fabricated and shop assembled, where possible. Temporary stiffeners, spacers, and other accessories necessary to facilitate handling and accurate erection shall be provided. After fabrication, tool marks and other surface imperfections shall be filled and ground smooth.

Fire Rating and Labeling: Doors and frames indicated as fire-rated shall bear a UL label indicating the type of rating for which certified. Designs and construction of such products shall have specific UL approval according to current procedures for the fire rating, either 3-hour, 1-1/2-hour, 3/4-hour, or 20-minute as indicated. Hollow steel doors and frames for fire-rated openings shall conform to Underwriters' Laboratories listing and shall be UL labeled.

Materials for Doors and Frames: Exterior doors and frames shall be fabricated entirely of steel galvanized to G90 in ASTM A 653. Other doors and frames, unless otherwise indicated, shall be fabricated from prime quality, commercial grade, cold-rolled steel conforming to ASTM A 366, Type II or III.

Priming and Painting: Doors and frames shall be chemically treated to ensure maximum paint adhesion and shall have all exposed surfaces painted with a rust-inhibitive primer after fabrication. Prime coat shall be capable of passing a 120-hour salt spray test in accordance with ASTM B 117 and a 250-hour humidity test in accordance with ASTM D 1735.

Hardware: Doors and frames shall be reinforced and drilled or tapped for fully templated mortised hardware; and shall be reinforced with plates for surface-mounted hardware, meeting ANSI A115 Series requirements.

2.02 METAL FRAMES

Pressed Metal Frames: Pressed steel frames for doors and other openings shall be combination buckled frame and trim of type and sizes indicated. Metal shall not be lighter than 16-gage steel. Frames shall be of the welded unit type. Special frames, oversized frames, and frames with transom shall be provided where indicated.

Frame Jamb Depths, Trim Profile, Stops, and Backbends: Frame jamb depths, trim profile, stops, and backbends shall be as indicated.

2.03 FRAME ANCHORS

Floor Anchors: Floor anchors shall be welded inside each frame jamb head, and holes shall be provided for floor anchorage. Minimum thickness of floor anchors shall be 14-gage.

Anchors for Masonry/Concrete Installations: Frames for installation in masonry and concrete walls shall be provided with adjustable jamb anchors of the T-strap, stirrups and strap, or wire type. The number of anchors provided per frame jamb and head shall be as follows:

Frames up to 7 feet 6 inches in height: 3 anchors.

Frames over 7 feet 6 inches to 8 feet 0 inches in height: 4 anchors.

Frames over 8 feet 0 inches in height: One anchor for each 2 feet 0 inches or fraction in height.

Frame head anchors shall be not less than those required by the Reference Standards.

2.04 DUST COVER BOXES AND MORTAR GUARDS

Dust cover boxes or mortar guards of not less than 24-gage steel shall be provided at all hardware mortises on frames to be set in masonry, concrete, or plaster walls.

2.05 SILENCER HOLES

Appropriate holes for silencers shall be provided in the door frames which are not designated to receive weatherstripping, seals, or sound seals.

2.06 STEEL DOORS

Design and Construction: Steel doors shall be of hollow metal construction and shall be full flush design with no visible seams. Face sheets shall be not less than cold-rolled, stretcher-levelled, 18-gage steel. Doors shall have flush seamless face sheets with continuously and fully welded seam edges. Doors shall be rigid and neat in appearance, and shall be free from warpage or buckle. Corner bends shall be true and straight and shall be of not less than the minimum radius for the gage of metal used. The door top and bottom shall be internally reinforced by steel members welded in place. Tops of exterior doors shall be provided with flush, water- and weather-tight top enclosures.

Door Cores: Door cores shall be water-resistant polystyrene with minimum R of 4.

Door Closers: Door closers shall conform to ANSI A156.4, Grade 1, Door Closers.

a. Door closers shall be heavy duty, rigid parallel arm; provide regular arm for regular bevel doors.

b. Door closer shall be full rack and pinion type, adjustable back check, and sweep and latch speed with key regulating screws.

c. Provide spacer block or support bracket for securing fifth screw on closer arm shoe. Provide special brackets, shoes, or other attachment devices as required.

d. Maximum pressure to operate doors shall not exceed 5.0 lbs.

Manufacturers, or Equal:

Forderer Cornice Works

Krieger Steel Products Co.

Overly Manufacturing Co.

Trussbuilt, Inc.

1.4 ROOF HATCH

A. Roof Hatches:

1. Type and Size: Equipment Hatch metal lid with 90 degree opening, 48 inches x 240 inches.
    a. Clear Unobstructed Opening Size: 42.63 inches x 236 inches
    b. Load Requirements:
        1) Minimum 40-lbf/sq. ft. external live load with a maximum deflection of 1/150 of the span and 20-lbf/sq. ft. internal uplift load.
    c. Hatch Material
        1) Cover: 0.0907 inch aluminum with double door.
        2) Cover Insulation: 1 inch polystyrene
        3) Curb: 0.0907 inch aluminum with a single wall curb, with integral counterflashing. Mounting flange continuous around base of frame.
            a) Fabricate curbs to minimum height of 12 inches above roofing surface unless otherwise indicated.
            b) Sloping Roofs: Where slope or roof deck exceeds 3:12, fabricate curb with perimeter curb height that is tapered to accommodate roof slope so that top surfaces of perimeter curb are level.
        4) Curb Insulation: 1 inch polyisocyanurate.
    d. Finish: TGIC Polyester powder coat paint.
    e. Color: As selected by Engineer from manufacturer's full range.
    f. Hardware: Type 316 stainless steel.
        1) Hinge/Spring Assembly: Tamper proof pin type hinge/spring assembly with compression springs contained within telescope tubes.
        2) Hold Open Device: Automatic zinc plated steel hold open arm with red vinyl grip handle.
        3) Latch: Zinc plated steel latch with inside and outside operating turn handles and padlock hasp provisions.
        4) Gasket: Extruded EPDM adhesive back seal, continuous around cover.

B. Safety Railing System: Model BSRC Roof-hatch manufacturer's standard system including rails, clamps, fasteners, safety barrier at railing opening, and accessories required for a complete installation; attached to roof hatch and complying with 29 CFR 1910.23 requirements and authorities having jurisdiction.

    1. Height: 42 inches above finished roof deck.

    2. Rails:
        a. Aluminum, 1-1/4 inch, 1.66 inch outside diameter, schedule 40 pipe, 6061-T6 alloy
        b. Finish: TGIC Polyester powder coat paint.
        c. Color As selected by Engineer from manufacturer's full range.
        d. Fittings: 5052-H32 Cast aluminum alloy with set screw hold.
        e. Mounting Brackets: 3/16 inch steel, zinc plated with nut backing plate.
        f. Exit: Chain, 3/16 inch galvanized steel chain with spring clip ends.

C. Manufacturer:

    1. Babcock-Davis or equal

PART 3 -- EXECUTION

3.01 PRODUCT DELIVERY, STORAGE, AND HANDLING

Doors and frames shall be shipped and stored with temporary stiffeners and spacers in place to prevent distortion.

Doors and frames shall be delivered in original, unbroken packages, containers, or bundles bearing the name of the manufacturer.

Doors and frames shall be carefully stored on wood blocking in an area that is protected from the elements. Storage shall be in a manner that will prevent damage or marring of finish.

3.02 CONSTRUCTION

General: WORK shall be in accordance with manufacturer's published recommendations and specifications.

WORK shall be coordinated with appropriate related subcontractors work to assure a proper installation. Field conditions and dimensions shall be verified prior to fabrication.

3.03 FRAME INSTALLATION

Frames shall be set plumb and square in a true plane, and be securely anchored to the adjoining construction. Steel shims shall be provided, set tight and rigidly attached between frame anchors and structure. Finished metal frames shall be strong and rigid; neat in appearance; and square, true, and free from defects, warp, or buckle.

Molded members, trims, and stops, shall be clean cut, straight, and shall be of a uniform profile throughout their lengths.

Corner joints shall have contact edges tightly closed with all trim faces mitered, welded, and finished smooth. The use of gussets will not be permitted.

3.04 DOOR INSTALLATION

Doors shall be installed plumb, square, and level. Doors shall operate freely, but not loosely. They shall be free from rattling while in a closed position.

Door clearances shall be plus 3/32-inch or minus 1/32-inch and shall not exceed the limits in the manufacturer's printed recommendations.

Any door that becomes warped more than 3/16-inch out-of-plane shall be replaced by the CONTRACTOR.

Doors and finish hardware shall have hardware protected prior to painting.

3.05 FINISH HARDWARE

Finish hardware shall be installed in accordance with hardware manufacturer's standard templates and printed instructions. Operable parts shall be adjusted for correct function and operation.

3.06 ROOF HATCH

A. Examination

1. Verification of Conditions: Examine areas and conditions under which Work is to be performed and identify conditions detrimental to proper or timely completion.

2. Verify that deck, curbs, roof membrane, base flashing, and other items affecting Work of this Section are in place and positioned correctly.

3. Verify tolerances and correct improper condition

4. Identify conditions detrimental to providing proper quality and timely completions of work.

5. Do not proceed with installation until detrimental conditions have been corrected.

B. Installation

1. Comply with manufacturer's recommendations.

2. Coordinate installation of components of this Section with installation of roof deck, roof structure, roofing membrane, and base flashing.

3. Coordinate installation of sealant and roofing cement with Work of this Section to ensure water tightness.

4. Securely anchor roof accessories in compliance with manufacturer's instructions.

5. Set units plumb, level, and true to line without warp or rack. Separate metal from incompatible metal or corrosive substrates, including wood, by coating concealed surfaces, at locations of contact, with bituminous coating or providing other permanent separation.

6. Flange Seals: Unless otherwise indicated, set flanges of accessory units in a thick bed of roofing cement to form a seal

C. Adjusting

1. Adjust movable parts for smooth operation

2. Operational Units: Test-operate units with operable components. Clean and lubricate joints and hardware. Adjust for proper operation.

D. Cleaning

1. Clean exposed surfaces per manufacturer's written instructions. Touch up damaged metal coatings.

- END OF SECTION -

SECTION 08331 - OVERHEAD COILING DOORS

PART 1 - GENERAL

1.01 SUMMARY

A. This Section includes the following types of manually operated overhead coiling doors:

1. Service doors.

1.02 PERFORMANCE REQUIREMENTS

A. Structural Performance: Provide overhead coiling doors capable of withstanding the effects of gravity loads and the following loads and stresses without evidencing permanent deformation of door components:

1. Wind Load: Uniform pressure (velocity pressure) of 40 lbf/sq. ft., acting inward and outward.
2. Impact Test for Flying Debris: Comply with ASTM E 1996, tested according to ASTM E 1886.

a. Level of Protection: Enhanced Protection.
b. Wind Zone: 120 mph; pressure test to 1/2 and 1-1/2 x design pressure (positive and negative).

B. Operation-Cycle Requirements: Provide overhead coiling door components and operators capable of operating for not less than 10,000 cycles.

1.03 CONTRACTOR SUBMITTALS

A. Product Data: For each type and size of overhead coiling door and accessory.

B. Shop Drawings: Include plans, elevations, sections, details, and attachment to other work.

C. Samples for Initial Selection: Manufacturer’s color charts showing full range of colors available for units with factory applied finishes.

D. Oversize Construction Certification: For door assemblies required to be fire-rated and that exceed size limitations of labeled assemblies.

E. Spare Parts List: List of spare parts provided per door assembly.

1.04 QUALITY ASSURANCE

A. Installer Qualifications: Manufacturer's authorized representative who is trained and approved for both installation and maintenance of units required for this Project.

B. Fire-Test-Response Characteristics: Provide assemblies complying with NFPA 80 that are identical to door and frame assemblies tested for fire-test-response characteristics per UL 10b

and NFPA 252, and that are listed and labeled for fire ratings indicated by UL, FMG, ITS, or another testing and inspecting agency acceptable to authorities having jurisdiction.

PART 2 - PRODUCTS

2.01 MANUFACTURERS

A. Available Manufacturers, or equal:
   1. Dial One House of Doors
   2. Overhead Door Corp.
   3. Asta Door Corporation
   4. Wayne-Dalton Corp.
   5. Amarr Garage Door Co.

2.02 DOOR CURTAIN MATERIALS AND CONSTRUCTION

A. Door Curtains: Fabricate overhead coiling door curtain of interlocking slats, designed to withstand wind loading indicated, in a continuous length for width of door without splices. Unless otherwise indicated, provide slats of thickness and mechanical properties recommended by door manufacturer for performance, size, and type of door indicated, and as follows:

   1. Steel Door Curtain Slats: Zinc-coated (galvanized), cold-rolled structural steel (SS) sheet; complying with ASTM A 653/A 653M, G90 (Z275) coating designation.
   2. Slat type: Flat profile.

B. Endlocks : Malleable-iron casings, secured to curtain slats to comply with wind load.

C. Bottom Bar: Manufacturer's standard to suit type of curtain slats.

   1. Astragal: Replaceable, adjustable, continuous, compressible gasket of flexible vinyl, rubber, or neoprene; as a cushion bumper for interior door.

D. Curtain Jamb Guides: Steel angles or channels and angles, with sufficient depth and strength to retain curtain, to allow curtain to operate smoothly, and to withstand loading. Slot bolt holes for guide adjustment. Provide removable stops on guides to prevent overtravel of curtain.

E. Hood: Form to act as weather seal and entirely enclose coiled curtain and operating mechanism at opening head. Contour to fit end brackets. Roll and reinforce top and bottom edges for stiffness. Provide closed ends for surface-mounted hoods, and provide fascia for any portion of between-jamb mounting projecting beyond wall face. Provide intermediate support brackets as required to prevent sagging.

   1. Steel Door Hoods: Minimum 0.028-inch- thick, hot-dip galvanized steel sheet that matches slat steel.
   2. Exterior Mounted Door: Fabricate hood with sealant joint bead profile for applying joint sealant.

F. Integral Frame, Hood, and Fascia: Welded assemblies:

   1. Steel: Minimum 0.064-inch- thick, hot-dip galvanized steel sheet that matches door steel.

G. Integral Sills: Integral part of frame assembly; fabricate of same sheet metal.

H. Weather seals: Replaceable, adjustable, continuous, compressible weather-stripping gaskets fitted to bottom and top of exterior doors, unless otherwise indicated. At door head, use 1/8-inch-thick, replaceable, continuous sheet secured to inside of hood.

1. Jamb Seals: Replaceable, adjustable, continuous, flexible, 1/8-inch- thick seals of flexible vinyl, rubber, or neoprene at door jambs for a weathertight installation.

I. Push/Pull Handles: Galvanized steel lifting handles on each side of door.

1. Provide pull-down straps or pole hooks for doors more than 84 inches high.

J. Slide Bolt: Engage through slots in tracks for locking by padlock, located on both left and right jamb sides, operable from coil side.

K. Locking Device Assembly: Lock, spring-loaded dead bolt, operating handle, cam plate, and adjustable locking bar to engage through slots in tracks.

1. Locking Bars: Manufacturer’s standard, operable from inside and outside.

L. Chain Lock Keeper: Suitable for padlock.

M. Counterbalancing Mechanism: Adjustable-tension, steel helical torsion spring mounted around a steel shaft and contained in a spring barrel connected to door curtain with barrel rings. Use grease-sealed bearings or self-lubricating graphite bearings for rotating members.

1. Mounting Brackets: Cast iron or cold-rolled steel plate.

N. Manual Door Operator: Hand-operated chain hoist.

2.03 FINISHES

A. Galvanized Steel Finish: Manufacturer's standard finish.

1. Color and Gloss: Factory applied; color as selected from manufacturer's standard selection by Engineer.

PART 3 - EXECUTION

3.01 INSTALLATION

A. General: Install coiling doors and operating equipment complete with necessary hardware, jamb and head molding strips, anchors, inserts, hangers, and equipment supports

B. Lubricate bearings and sliding parts; adjust doors to operate easily, free of warp, twist, or distortion, and with weathertight fit around entire perimeter.

3.02 DEMONSTRATION

A. Engage a factory-authorized service representative to train Owner's maintenance personnel to adjust, operate, and maintain doors. Refer to Division 1 Section "Project Closeout."

END OF SECTION 08331

SECTION 09960

COATINGS

PART 1 - GENERAL

1.01 SCOPE OF WORK

A. Coating systems for structures, piping and equipment.

1.02 REFERENCES

A. ASTM F 1869 - Measuring Moisture Vapor Emission Rate of Concrete Subfloor Using Anhydrous Calcium Chloride.

B. ASTM D 16 - Terminology Relating to Paint, Varnish, Lacquer, and Related Products.

C. ASTM D 4263 - Indicating Moisture in Concrete by the Plastic Sheet Method.

D. International Concrete Repair Institute (ICRI) Guideline No. 03732 - Selecting and Specifying Concrete Surface Preparation for Sealers, Coatings, and Polymer Overlays.

E. SSPC-SP 1 - Solvent Cleaning.

F. SSPC-SP 2 - Hand Tool Cleaning.

G. SSPC-SP 3 - Power Tool Cleaning.

H. SSPC-SP 5/NACE 1 - White Metal Blast Cleaning.

I. SSPC-SP 6/NACE 3 - Commercial Blast Cleaning.

J. SSPC-SP 10/NACE 2 - Near-White Metal Blast Cleaning.

K. SSPC-SP 13/NACE 6 - Surface Preparation of Concrete.

1.03 DEFINITIONS

A. Definitions of Painting Terms: ASTM D 16, unless otherwise specified.

B. Dry Film Thickness (DFT): Thickness of a coat of paint in fully cured state measured in mils (1/1000 inch).

1.04 SUBMITTALS

A. Comply with Section 01300 - Submittals.

B. Product Data: Submit manufacturer's product data for each coating, including generic description, complete technical data, surface preparation, and application instructions.

C. Color Samples: Submit manufacturer’s color samples showing full range of standard colors.

D. Manufacturer’s Quality Assurance: Submit manufacturer’s certification that coatings comply with specified requirements and are suitable for intended application.

E. Applicator’s Quality Assurance: Submit list of a minimum of 5 completed projects of similar size and complexity to this Work. Include for each project:

1. Project name and location.
2. Name of owner.
3. Name of contractor.
4. Name of engineer.
5. Name of coating manufacturer.
6. Approximate area of coatings applied.
7. Date of completion.

F. Warranty: Submit manufacturer’s standard warranty.

1.05 QUALITY ASSURANCE

A. Manufacturer’s Qualifications:

1. Specialize in manufacture of coatings with a minimum of 10 years successful experience.
2. Able to demonstrate successful performance on comparable projects.
3. Single Source Responsibility: Coatings and coating application accessories shall be products of a single manufacturer.

B. Applicator’s Qualifications:

1. Experienced in application of specified coatings for a minimum of 5 years on projects of similar size and complexity to this Work.
2. Applicator's Personnel: Employ persons trained for application of specified coatings.

C. Pre-application Meeting: Convene a pre-application meeting two (2) weeks before start of application of coating systems. Require attendance of parties directly affecting work of this section, including Contractor, applicator, and manufacturer’s representative.

1.06 DELIVERY, STORAGE, AND HANDLING

A. Delivery: Deliver materials to site in manufacturer's original, unopened containers and packaging, with labels clearly identifying:

1. Coating or material name.
2. Manufacturer.
3. Color name and number.
4. Batch or lot number.
5. Date of manufacture.
6. Mixing and thinning instructions.

B. Storage:

1. Store materials in a clean dry area and within temperature range in accordance with manufacturer's instructions.

2. Keep containers sealed until ready for use.

3. Do not use materials beyond manufacturer’s shelf life limits.

C. Handling: Protect materials during handling and application to prevent damage or contamination.

1.07 ENVIRONMENTAL REQUIREMENTS

A. Weather:

1. Air and Surface Temperatures: Prepare surfaces and apply and cure coatings within air and surface temperature range in accordance with manufacturer’s instructions.

2. Surface Temperature: Minimum of 5 degrees F (3 degrees C) above dew point.

3. Relative Humidity: Prepare surfaces and apply and cure coatings within relative humidity range in accordance with manufacturer’s instructions.

4. Precipitation: Do not prepare surfaces or apply coatings in rain, snow, fog, or mist.

5. Wind: Do not spray coatings if wind velocity is above manufacturer’s limit.

B. Ventilation: Provide ventilation during coating evaporation stage in confined or enclosed areas in accordance with AWWA D 102.

C. Dust and Contaminants:

1. Schedule coating work to avoid excessive dust and airborne contaminants.

2. Protect work areas from excessive dust and airborne contaminants during coating application and curing.

PART 2 - PRODUCTS

2.01 MANUFACTURER

A. Tnemec Company Incorporated, or equal.

2.02 COATING SYSTEMS FOR DUCTILE IRON PIPE AND VALVES; STRUCTURAL STEEL

A. Exterior Exposed:

1. System Type: Epoxy/urethane.

2. Surface Preparation: See Section 3.4.

3. Primer: Series 1 Omnithane DFT 3.0 to 3.5 mils.

4. Intermediate Coat: Series 66 Hi-Build Epoxoline DFT 5.0 to 6.0 mils.

5. Finish Coat: Series 1074U Endura-Shield DFT 2.0 to 3.0 mils.

6. Total DFT: 10.0 to 12.5 mils.

7. Finish Color: Blue.

B. Immersion - Severe Service::

1. System Type: Polyamine Epoxy.

2. Surface Preparation: See Section 3.4.

3. Primer: Series 435 Perma-Glaze DFT 8.0 to 10.0 mils.

4. Finish Coat: Series 435 Perma-Glaze DFT 8.0 to 10.0 mils.

5. Total DFT: 16.0 to 20.0 mils

6. Finish Color: Gray.

2.03 COATING SYSTEMS FOR CAST-IN-PLACE CONCRETE

A. Interior surfaces of wet well and screen channel (excluding bottom and bottom grout)

1. System Type: Polyamine Epoxy

2. Surface Preparation: See Section 3.5.

3. Filler/Surfacer: Series 218/219 to fill voids and bugholes.

4. Primer: Series 435 Permaglaze. DFT 15.0-20.0 mils.

5. Finish Coat: Series 435 Permaglaze. DFT 15.0-20.0 mils.

6. Total DFT: 30.0 to 40.0 mils.

7. Finish Color: Light Gray or Beige.

PART 3 - EXECUTION

3.01 EXAMINATION

A. Examine areas and conditions under which coating systems are to be applied. Notify Engineer of areas or conditions not acceptable. Do not begin surface preparation or application until unacceptable areas or conditions have been corrected.

3.02 PROTECTION OF SURFACES NOT SCHEDULED TO BE COATED

A. Protect surrounding areas and surfaces not scheduled to be coated from damage during surface preparation and application of coatings.

B. Immediately remove coatings that fall on surrounding areas and surfaces not scheduled to be coated.

3.03 SURFACE PREPARATION

A. General

1. Prepare all surfaces in accordance with manufacturer’s instructions.

2. If the specified surface preparation varies from the manufacturer's recommendation, the more stringent method shall be employed.

3. All surfaces shall be clean and dry prior to coating.

3.04 SURFACE PREPARATION OF DUCTILE OR CAST IRON

A. All surfaces shall first be inspected and pre-cleaned with appropriate solvents to remove grease, oil, and other soluble contaminants. Prior to evaporation, remove solvent by wiping with clean, lint-free cloth rags. Remove rag residue with dry, oil free compressed air.

B. Measure surface profile (anchor profile) in accordance with ASTM D4417, Method C. If surface profile is less than 1.5 mils, then proceed with brush-off blast cleaning in accordance with 3.6 C. below. If surface profile is 1.5 mils or greater, then proceed with hand or power tool cleaning in accordance with 3.6 D below.

C. Remove all loose annealing oxides, loose rust, dirt, and other foreign matter by compressed air nozzle abrasive blast cleaning. Any dust or other contaminants remaining after blasting shall be removed with dry, oil free compressed air or vacuum cleaning. Recheck surface profile prior to painting. A profile depth of at least 1.5 mils is required.

D. Remove all loose annealing oxides, loose rust, dirt and other foreign matter with the use of hand or power tools. Do not use cleaning tools that burnish or smooth the natural roughness (profile) of the cast iron surface. Any dust or other contaminants remaining after hand or power tool cleaning shall be removed with dry, oil free compressed air or by vacuum cleaning.

E. The cleaned cast iron surfaces shall be protected from conditions of high humidity, rainfall and surface moisture. All surfaces must be dry, clean and at least 5° F above the dew point prior to painting.

3.05 SURFACE PREPARATION OF CONCRETE

A. Immersion and Below Grade Service:

1. Prepare concrete surfaces in accordance with SSPC-SP 13/NACE 6, and ICRI 03732.

2. Allow concrete to cure for a minimum of 28 days.

3. Test concrete for moisture in accordance with ASTM D 4263 and F 1869.

4. Abrasive blast surface to remove laitance, curing compounds, sealers and all other solid contaminants and to provide clean, sound substrate with uniform anchor profile as required by the manufacturer for the specific system to be applied.

5. Fill holes, pits, voids, and cracks with Tnemec Series 218 or 219.

6. Ensure surfaces are clean, dry, and free of oil, grease, chalk, form release agents, and other contaminants.

3.06 APPLICATION

A. Apply coatings in accordance with manufacturer's instructions.

B. Mix and thin coatings, including multi-component materials, in accordance with manufacturer's instructions.

C. Keep containers closed when not in use to avoid contamination.

D. Do not use mixed coatings beyond pot life limits.

E. Use application equipment, tools, pressure settings, and techniques in accordance with manufacturer's instructions.

F. Uniformly apply coatings at spreading rate required to achieve specified DFT.

G. Apply coatings to be free of film characteristics or defects that would adversely affect performance or appearance of coating systems.

3.07 REPAIR

A. Materials and Surfaces Not Scheduled to Be Coated: Repair or replace damaged materials and surfaces not scheduled to be coated.

B. Damaged Coatings: Touch-up or repair damaged coatings. Touch-up of minor damage shall be acceptable where result is not visibly different from adjacent surfaces. Recoat entire surface where touch-up result is visibly different, either in sheen, texture, or color.

C. Coating Defects: Repair in accordance with manufacturer's instructions coatings that exhibit film characteristics or defects that would adversely affect performance or appearance of coating systems.

3.08 FIELD QUALITY CONTROL

A. Manufacturer's Field Services: Manufacturer's representative shall provide technical assistance and guidance for surface preparation and application of coating systems.

3.09 CLEANING

A. Remove temporary coverings and protection of surrounding areas and surfaces.

3.10 PROTECTION OF COATING SYSTEMS

A. Protect surfaces of coating systems from damage during construction.

END OF SECTION 09960

SECTION 11151 – SELF PRIMING CENTRIFUGAL PUMPS

PART 1 -- GENERAL

1.1 SCOPE OF WORK

A. The Contractor shall furnish all materials, equipment, transportation, tools and labor necessary and complete the installation with all pump/motors, controls, piping, valves, wiring, etc. necessary for a complete and operating pumping system. The pump station shall be outfitted with four (4) horizontal self-priming solids handling centrifugal pumps. Equipment shall be new, suitable for intended usage, and installed in complete conformance with the manufacturer's instructions and these specifications.

1.2 SUBMITTALS

A. Copies of all materials required to establish compliance with the specifications shall be submitted in accordance with the provisions of the General Conditions. Submittal shall include at least the following:

B. Certified shop and erection drawings showing all important details of construction, dimensions, and anchor bolt locations.

C. Descriptive literature, bulletins, and/or catalogs of the equipment.

D. Data on characteristics and performance of the pump. Data shall include guaranteed performance curves, based on actual shop tests of duplicate units, which show that they meet the specified requirements for head, capacity, efficiency, allowable NPSH, allowable suction lift, and horsepower. Curves shall be submitted on separate 8 ½ by 11-inch sheets. Curves for multiple speed pumps shall be provided with curves plotted for each specified rpm.

E. The total weight of the equipment including the weight of the single largest items.

F. A complete total bill of materials for all equipment.

G. A list of the manufacturer's recommended spare parts with the manufacturer's current price for each item. Include gaskets, packing, and related items on the list. List bearings by the bearing manufacturer's number only.

1.3 OPERATING INSTRUCTIONS

A. Copies of an operating and maintenance manual for each pump shall be furnished to the Engineer as provided for in General Requirements. The manuals shall be prepared specifically for this installation and shall include all required cuts, drawings, equipment lists, descriptions, and other material required to instruct operating and maintenance personnel unfamiliar with such equipment.

B. A factory representative who has complete knowledge of proper operation and maintenance shall be provided for one (1) day to instruct representatives of the Owner and the Engineer on proper operation and maintenance of this equipment. This work may be conducted in conjunction with the inspection of the installation and test run. If there are difficulties in operation of the equipment due to the manufacturer's design of fabrications, additional service shall be provided at no cost to the Owner.

1.4 RELATED WORK SPECIFIED ELSEWHERE

A. Electrical Work and controls.

1.5 WARRANTY

A. Contractor shall warrant equipment and installation to be free from defects for a period of one (1) year from the date of acceptance, excepting only those items normally consumed in service.

B. Components which fail under this warranty shall be repaired or replaced without cost of labor or materials to the owner.

C. The pump manufacturer shall provide a minimum 4-year warranty on the self-priming pumps

PART 2 -- PRODUCTS

2.1 SELF-PRIMING PUMPS

A. Performance Criteria. Self-priming pumps must be designed to handle raw, unscreened, domestic sanitary sewage. Each pump shall be guaranteed to perform at the following conditions: 1) 2700 GPM @ 53 feet TDH at 1150 RPM, minimum hydraulic efficiency of 75%, 2) 2000 GPM @ 67 feet TDH at 1150 RPM, minimum hydraulic efficiency of 75%. The minimum shut off head for each pump shall be 96 feet. The motors shall be suitable for 3 phase, 60 hertz, 480 volt, 4 wire power supply. The motors shall be 50 horsepower. Pump performance shall be stable and free from cavitation and noise throughout the entire specified operating range.

B. Solids Handling Capability.

1. All internal passages, impeller vanes, and recirculation ports shall pass a 3” spherical solid. Smaller internal passages that create a maintenance nuisance or interfere with priming and pump performance shall not be permitted. Certified drawings showing size and location of the recirculation port(s) shall be submitted for approval.

C. Reprime Performance.

1. Consideration shall be given to the sanitary sewage service anticipated, in which debris is expected to lodge between the suction check valve and its seat, resulting in the loss of the pump suction leg, and siphoning of liquid from the pump casing to the approximate center line of the impeller. Such occurrence shall be considered normal, and the pump must be capable of automatic, unattended operation with an air release line installed.

2. During unattended operation, the pump shall retain adequate liquid in the casing to ensure automatic repriming while operating at its rated speed in a completely open system. The need for a suction check valve or external priming device shall not be required.

3. Pump must reprime the vertical distance shown on the plans at the specified speed and impeller diameter. Reprime lift is defined as the static height of the pump suction above the liquid, while operating with only one-half of the liquid remaining in the pump casing. The pump must reprime and deliver full capacity within five minutes after the pump is energized in the reprime condition. Reprime performance must be confirmed with the following test set-up:

D. A check valve to be installed downstream from the pump discharge flange. The check valve size shall be equal (or greater than) the pump discharge diameter.

E. A length of air release pipe shall be installed between pump and the discharge check valve. This line shall be fitted with a Gorman-Rupp Model GRP33-07 (or equal) air release valve and be vented to the wet well as indicated on the Drawings.

F. The pump suction check valve shall be removed. No restrictions in the pump or suction piping will

prevent the siphon drop of the suction leg. Suction pipe configuration for reprime test shall incorporate a 2 feet minimum horizontal run, a 90° elbow and vertical run at the specified lift. Pipe size shall be equal to the pump suction diameter.

G. Impeller clearances shall be set as recommended in the pump service manual.

H. Repeatability of performance shall be demonstrated by testing five consecutive reprime cycles. Full pump capacity (flow) shall be achieved within five minutes during each cycle.

I. Liquid to be used for reprime test shall be water.

J. Upon request from the Engineer, certified reprime performance test results, prepared by the manufacturer, and certified by a registered professional engineer, shall be submitted for approval prior to shipment.

K. Manufacturer

1. Gorman-Rupp model T10A-B-2, or equal

2.2 Pump Design.

A. Pumps shall be horizontal, self-priming centrifugal type, designed specifically for handling raw, unscreened, domestic sanitary sewage. Pump solids handling capability and performance criteria shall be in accordance with requirements listed herein.

B. Materials and Construction Features.

1. Pump casing: Casing shall be cast iron Class 30 with integral volute scroll. Casing shall incorporate following features:

2. Mounting feet sized to prevent tipping or binding when pump is completely disassembled for maintenance.

3. Fill port cover plate, 3 1/2" diameter, shall be opened after loosening a hand nut/clamp bar assembly. In consideration for safety, hand nut threads must provide slow release of pressure, and the clamp bar shall be retained by detente lugs. A Teflon gasket shall prevent adhesion of the fill port cover to the casing.

4. Casing drain plug shall be at least 1 1/4" NPT to insure complete and rapid draining.

C. Liquid volume and recirculation port design shall be consistent with performance criteria listed herein.

D. Cover plate:Cover plate shall be cast iron Class 30. Design must incorporate following maintenance features:

E. Retained by hand nuts for complete access to pump interior. Cover plate removal must provide ample clearance for removal of stoppages, and allow service the impeller, seal, wear plate or check valve without removing suction or discharge piping.

F. A replaceable wear plate secured to the cover plate by weld studs and nuts shall be AISI 1018 HRS.

G. In consideration for safety, a pressure relief valve shall be supplied in the cover plate. Relief valve shall open at 75-200 PSI.

H. O-ring of Buna-N material shall seal cover plate to pump casing.

I. Rotating Assembly: A rotating assembly, which includes impeller, shaft, mechanical shaft seal, lip seals, bearings, seal plate and bearing housing, must be removable as a single unit without disturbing the pump casing or piping. Design shall incorporate following features:

J. Seal plate and bearing housing shall be cast iron Class 30. Separate oil filled cavities, vented to atmosphere, shall be provided for shaft seal and bearings. Cavities must be cooled by the liquid pumped and lip seals will prevent leakage of oil. The bearing cavity to have an oil level sight gauge and fill plug check valve. The check valve shall vent the cavity but prevent introduction of moist air to the bearings.

K. Impeller shall be ductile iron, two-vane, semi-open, non-clog, with integral pump out vanes on the back shroud. Impeller shall thread onto the pump shaft and be secured with a lock screw and conical washer.

L. Shaft shall be AISI 17-4 PH stainless steel.

M. Bearings shall be anti-friction ball or tapered roller type of proper size and design to withstand all radial and thrust loads expected during normal operation. Bearings shall be oil lubricated from a dedicated reservoir. Pump designs which use the same oil to lubricate the bearings and shaft seal shall not be used.

N. Shaft seal shall be oil lubricated mechanical type. The stationary and rotating seal faces shall be tungsten titanium carbide alloy. Each mating surface shall be lapped to three light band flatness, as measured by an optical flat under monochromatic light. The stationary seal seat shall be double floating by virtue of a dual O-ring design; an external O-ring secures the stationary seat to the seal plate, and an internal O-ring holds the faces in alignment during periods of mechanical or hydraulic shock (loads which cause shaft deflection, vibration, and axial/radial movement). Elastomers shall be viton. Cage and spring to be AISI 316 stainless steel. Seal shall be oil lubricated from a dedicated reservoir. The same oil shall not lubricate both shaft seal and shaft bearings. Seal shall be warranted in accordance with requirements listed herein.

O. Adjustment of the impeller face clearance (distance between impeller and wear plate) shall be accomplished by external means. Stainless steel adjusting shims shall be used to move the entire rotating assembly as a unit when adjusting the working clearances. Clearance adjustment which requires movement of the shaft only, thereby adversely affecting seal working length or impeller back clearance, shall not be used.

P. Suction check valve shall be molded Neoprene with integral steel and nylon reinforcement. A blow-out center shall protect pump casing from hydraulic shock or excessive pressure. Removal or installation of the check valve must be accomplished through the cover plate opening, without disturbing the suction piping. Sole function of check valve shall be to save energy by eliminating need to reprime after each pumping cycle. Pumps requiring a suction check valve to assist reprime shall not be used.

Q. Spool flanges shall be one-piece cast iron, Class 30 fitted to suction and/or discharge ports. Each spool shall have one 1-1/4" NPT and one 1/4" NPT tapped hole with pipe plugs for mounting gauges or other equipment.

R. A cast iron flare fitting shall be used at the end of the suction line in the wet well.

S. Anchor Bolts: Anchor bolts shall be Type 304 Stainless Steel.

2.3 CONTROLS

A. Controls shall be as specified in Division 16 – Electrical.

PART 3 -- EXECUTION

3.1 INSTALLATION

A. Installation of pumping equipment shall be in strict accordance with the manufacturer's instructions and recommendation in the locations shown on the drawings.

3.2 TESTING AND ACCEPTANCE

A. Factory Tests: Each pump being furnished under these specifications shall be factory tested. Certified copies of the Hydrostatic Test Report shall be supplied prior to conducting a pump performance test.

B. Installation & Field Acceptance Tests: The pumps and motors shall be installed in accordance with the instructions of the manufacturer and as indicated on the Drawings. In addition, the pumps and motors shall be installed under the supervision of a factory representative of the manufacturer supplying the equipment.

C. The Contractor shall submit certification by the equipment manufacturer that their equipment has been satisfactorily installed and ready for operation and that the operating personnel have been adequately instructed in the operation, lubrication, and maintenance of their equipment.

D. Installation shall include furnishing the required oil and grease for initial operation. The grades of oil and grease shall be in accordance with the manufacturer=s recommendations. Furnish all anchor bolts, temporary lifting equipment, power, water, labor and all other incidentals required for the proper installation of the pumps.

E. Furnish the services of a factory representative who has complete knowledge and experience in the proper installation, operation, and maintenance of the pumping equipment, to inspect the final installation and supervise the field acceptance tests of the equipment. These services shall be provided for a minimum of one (1) day with additional time provided, if required by the Engineer, to correct problems or deficiencies. These services shall be combined with those provided under Paragraph 1.5, Operating Instructions.

F. Field testing shall be conducted after the installation of all equipment has been completed, and the equipment operated for a sufficient period to make all desirable corrections and adjustments. Each pumping unit and all associated equipment shall be given a field test to determine that operation is satisfactory and in compliance with the Specification.

END OF SECTION 11151

THIS PAGE LEFT BLANK INTENTIONALLY

SECTION 11301

SCREENINGS WASHING & COMPACTING EQUIPMENT

PART 1 - GENERAL

1.01. SUMMARY

A. Section Includes: Screenings washing and compacting equipment, and controller.

1.02. REFERENCE STANDARDS

A. Equipment shall, as applicable, meet the requirements of the following industry standards.

1. ASTM International (ASTM):

a. ASTM A36 – Carbon Steel Plate
b. ASTM A536 – Ductile Iron Castings
c. ASTM A48 – Gray Iron Castings
d. ASTM Grade 630 (UNS S17400) Stainless Steel

2. American Iron and Steel Institute (AISI):

a. AISI Type 4130 – Heat Treated Alloy Steel
b. AISI Type 4140 – Heat Treated Alloy Steel
c. AISI Type 1045 – Steel
d. AISI Type 303 – Stainless Steel
e. AISI Type 304 – Stainless Steel
f. AISI Type 316 – Stainless Steel

3. Society of Automotive Engineers (SAE):

a. SAE Type 660 – Bearing Bronze

4. National Electrical Manufacturer’s Association (NEMA) Standards

5. National Electrical Code (NEC)

6. Underwriters Laboratory (UL and cUL)

7. International Electrotechnical Commission (IEC)

1.03. QUALITY ASSURANCE

A. Qualifications:

1. Manufacturer is documented as being engaged in the sale of similar products for over forty years.

2. Manufacturer is single supplier for equipment listed in this section.

3. Manufacturer’s Service Center is located domestically for repairs and upgrades.

4. Manufacturer supports Renew Program, providing new factory-built replacements of selected products for install without requirement to return existing equipment.

5. Manufacturer supports Preventative Maintenance Program, providing inspection and service of equipment by Manufacturer's Factory Technicians.

6. Manufacturer stocks all non-custom spare parts.

B. Regulatory Requirements:

1. Manufacturer is U.L. listed for the construction of controller.

C. Certifications:

1. Manufacturer's management system is ISO9001 certified.

1.04. SUBMITTALS

A. Submittal documentation is provided for approval in ".pdf" format.

B. Product Data:

1. Product description text

2. Performance curves or capacity tables

3. Catalog data

C. Shop Drawings

1. General arrangement of installation

2. Product configuration

3. Assembly

D. Operation and Maintenance Manuals

1. Submit one copy of a suitable operation and maintenance manual with shipment of product. An electronic version shall be supplied to create additional copies.

2. The manuals shall include but not be limited to the following:

a. Equipment descriptions

b. Operating instructions

c. Drawings

d. Troubleshooting techniques

e. Recommended maintenance schedule

f. Recommended lubricants

g. Recommended replacement parts list

1.05. DELIVERY, STORAGE, AND HANDLING

A. Packaging, Shipping, Handling, and Unloading

1. Packaged in containers or on skids suitable for normal shipping, handling, and storage.

2. Protected from rain, snow, impact, and abrasion while in the possession of the carrier.

B. Acceptance at Site

1. Contractor shall review the contents of the shipment at time of delivery and promptly notify the carrier and supplier of any discrepancies.

C. Storage and Protection

1. Equipment to remain in the packaging provided by the supplier until it is installed.

2. Equipment to be stored in a dry environment between 40- and 100-degrees F.

D. Waste Management and Disposal

1. Contractor shall be responsible for discarding all packaging materials in an environmentally friendly manner and in accordance with local regulations.

1.06. WARRANTY

A. 12-Month Limited Warranty

1. Manufacturer shall submit a standard twelve-month limited warranty document clearly identifying the scope, term, and exclusions from the coverage.

2. Warranty period shall be from date of final acceptance.

B. Supplier shall support product with multiple programs options available.

1. Service Center located domestically for repairs and upgrades

2. Renew Program: Provides new factory-built replacements of selected products for install without requirement to return existing products.

3. Preventative Maintenance Program: Inspection and service of equipment by Factory Technicians.

4. Spare Parts

PART 2 - PRODUCTS

2.01. MANUFACTURERS

A. JWC Environmental, LLC, or equal.

2.02. SCREENINGS WASHING COMPACTOR

A. Wash and compact screenings removed from a waste stream and lift and convey to a discharge point as defined in the plans.

B. Basis of Design: Monster Wash Press Series MWP0018, 300mm Paddle Compaction Screw as manufactured and supplied by JWC Environmental, LLC. Design feeds solids along with wash water directly onto the paddle compaction screw for washing, separation, and compaction.

1. Nominal Inlet Dimensions: 18 inches x 8-1/2 inches

2. Discharge Drain Connections: Two 4-inch Female NPT

3. Solids Capacity (Continuous): 206 ft^3/hr

4. Solids Capacity (Batch): 120 ft^3/hr

5. Water (Laundry) Capacity: 280 GPM including Wash Press spray water.

6. Environment Rating for Motor: Non-hazardous

C. Basis of Design: Motor Controller as manufactured and supplied by JWC Environmental, LLC.

1. Series: PC2361 Non-Hazardous

D. Wash Tank

1. Tank with removable cover and end plates, allow for removal or installation of compaction screw from either end or above.

2. Tanks without a removable cover are not acceptable.

3. Inspection ports and covers

a. Three ports for viewing, located on either side of tank and on top cover.

4. Spray water manifolds

a. Spray pipes located on either side of perforated screen for washing of material.

5. Construction Material

a. AISI 304 – Stainless Steel.

i. Passivated with glass bead blast finish

E. Perforated Screen

1. Screen provides separation of solids and water through use of perforated holes that control particle size throughout.

2. Screen removable from tank through use of fasteners.

a. Screens that are welded into tank are considered non-removable and are not acceptable.

3. Screen perforated hole diameter ¼ inch (6mm) with 40% open area

4. Construction Material

a. AISI 304 – Stainless Steel

i. Passivated with glass bead blast finish

F. Spray Water Control Assembly

1. Filters, controls, and regulates spray water to the tank spray water manifold.

2. Filters, controls, and regulates spray water to the Hopper spray water manifold.

3. Delivery, frequency, and duration: Programmable through the controller.

4. Basket strainer: Primary filtration of spray water with 20 mesh screen.

    a. Construction: Bronze housing with AISI 304 stainless steel screen.

5. Y-Strainer: Secondary filtration of spray water with 80 mesh screen.

    a. Construction: Bronze housing with AISI 304 stainless steel screen.

6. Solenoid Valves: Control flow of water to manifolds with 120VAC coil, explosion proof.

    a. Construction: Bronze housing

7. Ball Valves: Manual regulation of water flow and shut off

    a. Construction: AISI 316 – Stainless Steel

8. Pressure Gauge: Visual indication of operation pressure.

    a. Freeze resistant design

    b. Range: 0-160 PSI

9. Reinforced Hose: Connects Wash Water Control Assembly to spray water manifolds.

G. Paddle Compaction Screw

1. Screw design provides disruptive movement of the material creating a turning or flipping action that enhances the wash process by continually exposing additional surface area to the wash water. Compaction screw constructed with specific purpose flight zones for pre-wash zone, wash zone, and compaction zone.

2. Pre-wash zone flights

    a. 12-inch outer diameter with ¼ inch thick sectional flights

    b. No brush shall be used in this zone to prevent solids buildup.

3. Wash zone flights

    a. 12-inch outer diameter with ¼ inch thick sectional flights and three 3/8-inch thick paddle sections for disruptive movement of material.

    b. Flight brush segmented for each full pitch of spiral to scrub perforations in wash zone

        i. Base: HDPE
        ii. Bristles: Level cut nylon

    c. Paddle brush segmented for each paddle

        i. Base: HDPE
        ii. Bristles: crimped nylon

4. Compaction zone flights

a. Dual helix design 11 ¼ inch diameter with a nested 1-inch thick outer spiral and a ½ inch thick inner spiral

b. Second helix for one full pitch of spiral

c. Hard face weld applied with two layers to face of dual helix flights using Stoody 2134 or Lincoln electric wear shield 60.

5. Torque Tube with Plug Nose

a. 3-inch diameter tube inserted and welded through center of all flight zones.

b. End of tube with plug nose design to create “donut” form of solid plug in compaction zone for easier transport.

c. Hard face weld applied with two layers to dome using Stoody 2134 or Lincoln electric wear shield 60.

H. Compaction Elbow

1. 60 degree bend aiding formation of solids plug and inclined to lift solids to discharge point.

2. Construction Material

a. AISI 304 – Stainless Steel

i. Passivated with glass bead blast finish

I. Tapered Transport Tube

1. Transport tube tapered 12 ½ inch diameter to 13 5/8 inch diameter to allow for reduced restriction on movement of capered solids and allow proper air flow to further dry material.

2. Tapered transport tube length: 49 ¼ inch

3. Transport tube lifting bracket designed to lift tube empty or with full solids.

4. Construction Material

a. AISI 304 – Stainless Steel

i. Passivated with glass bead blast finish

J. Straight Transport Tube

1. Transport tube 13 5/8 inch diameter provides additional length to discharge.

2. Construction Material

a. AISI 304 – Stainless Steel

i. Passivated with glass bead blast finish

K. Shaft Seal

1. Provides sealing for Paddle Compaction screw shaft and wash tank

2. Tungsten carbide dynamic and static seals faces

3. Bearing provides support for axial thrust loads

4. Static and dynamic race housings: AISI 304 – Stainless Steel

5. Elastomers: BUNA-N (Nitrile)

L. Speed Reducer

1. Manufacturer: Radicon

2. Reduction ration and design: 123.3:1, helical bevel shaft mounted

3. Lubrication: Synthetic oil

M. Motor

1. TEFC Motor: Baldor Electric Company

2. Installed Horsepower: 5 HP

3. RPM: 1750

4. Motor Service Factor: 1.15 minimum

5. Motor Efficiency Factor (at full load): 89.5 minimum

6. Motor Power Factor (at full load): 78

N. Motor Controller

1. JWC Environmental Model PC2361 Controller

2. Number of Motor Controllers: 1

3. Motor Control Power: 460 VAC/ 3 PH/ 60 HZ

4. Enclosure: FRP NEMA 4x

a. Houses PLC, control devices, motor starter, OIT, and main power disconnect switch

5. Functionality

a. Programmable operation of washing & compacting equipment

i. Controller Logic: SMART

b. Run Permissive: Signal to motor controller indicating activity of upstream equipment.

c. Accumulated Feed Time: Minimizes operation and creates uniform batch loading into the system.

d. Programmable Run Sequences: Comprised of a sequence of time elements controlling auger behavior to optimize washing and compacting based on motor power consumption.

e. Power monitor: Identifies real time auger motor power consumption to determine appropriate stage parameters to execute next run cycle.

f. Wash Water Duration and Frequency: Fully programmable and adjustable through stages of operation.

g. Repeat Function: Reoccurring run sequence for multiple solids washing sequences.

6. Auger ON-OFF-AUTO three position selector switch

a. OFF Position: Washing & compacting equipment shall not run.

b. ON Position: Washing & compacting equipment shall run continuously forward.

c. AUTO Position: Washing & compacting equipment shall operate device in accordance with pre-configured operating parameters as controlled by a Run Permissive signal from an upstream feed device.

7. Pilot Lights: 22mm LED type rated NEMA 4X

a. Indicate auger run and fail

8. Reset Pushbutton: 22mm momentary and rated NEMA 4X

a. Resets system after fail

9. Emergency Stop Pushbutton

a. Rating: NEMA 4X

b. Stops all motors and de-energizes solenoid valves

10. Motor Starters

a. IEC full voltage reversing type with 120 VAC operating coils.

b. Integrated, adjustable overload relays sized to full load amperes (FLA) of the motor (see Power Monitor).

11. Programmable Logic Controller: Manufactured by Allen-Bradley

a. Model: Micro820

12. Power Monitor: Allen-Bradley E300 intelligent motor overload relay.

a. Adjustable overload relay functionality sized to motor full load amperes (FLA).

b. Provides full-scale auger motor power demand to PLC to determine proper run cycle.

13. Operator Interface Terminal (OUT): Operation, display, and programming

a. Manufacturer: Allen-Bradley

b. Model: PanelView 800 with 4-inch display

c. Indicator lights, switches, and other control devices

d. Includes interface for a minimum 512 MB industrial grade compact flash card

e. Monitoring display

i. Auger: Running or stopped
ii. Run cycle
iii. Auger power demand
iv. Grinder current demand
v. Start delay
vi. Spray valve: Open or closed
vii. Running failure
viii. Service reminder and operational messages

f. Password-protected screens allow configuration of:

i. Date and time
ii. Grinder off delay
iii. Auger start parameters
iv. Auger stage run cycle parameters
v. Wash tank spray water stage parameters
vi. Stage power demand values

14. Operation

a. Auger Jam occurs while system is running:

i. Controller stops and reverses auger rotation to clear obstruction
ii. If Jam clears:
a) Controller returns auger to normal operation
iii. If two reverses occur within a 30 second interval:
a) Controller de-energizes auger motor and activates auger FAIL indicator and relay.

b. Power Failure While Operating

i. System returns to normal operation once power is restored, running as dictated by the permissive and programmed run sequence.

c. Power Failure While Auger is in Fail Condition

i. Once power is restored the fail indicator reactivates and remains until reset.

PART 3 - EXECUTION

3.01. INSTALLATION

A. Coordinate installation of the equipment in accordance with the manufacturer's installation instructions, approved submittals, and in accordance with OSHA, local, state, and federal codes and regulations.

3.02. FIELD QUALITY CONTROL

A. Inspection

1. The manufacturer is required to provide the services of a factory or manufacturer's representative for a minimum of one day to inspect the equipment for proper installation, apply power for the first time and check for proper motor rotation, oversee the initial introduction of material into the system and confirm the equipment operates as intended.

B. Training

C. Field training for operations, maintenance, and supervisory staff members is to be provided by a manufacturer or manufacturer's representative. Field instruction shall cover key components of the equipment, operating and maintenance requirements and troubleshooting techniques.

END OF SECTION 11301

SECTION 11330

CHAIN & RAKE BAR SCREEN SYSTEM

PART 1 - GENERAL

1.01. SUMMARY

A. This section of the specification describes the Chain & Rake System which shall consist of a screenings unit for effluent particle capture and transport to the discharge. The Chain & Rake System shall be provided with a controller for operation and control. The equipment shall be installed as shown on the plans, as recommended by the supplier, and in compliance with all OSHA, local, state, and federal code and regulations.

1.02. QUALITY ASSURANCE

A. Qualifications

1. Qualified suppliers shall have a minimum 10 years of experience in designing and manufacturing screens. Supplier shall provide a list of names and dates of installations for verification by the Engineer or Owner’s Representative.

1.03. IDENTIFICATION

A. Each unit of equipment shall be identified with a corrosion resistant nameplate, securely affixed in a conspicuous place. Nameplate information shall include equipment model number, serial number, supplier’s name, and location.

PART 2 - PRODUCTS

2.01. MANUFACTURERS

A. Chain & Rake Unit(s) and motor controller(s) shall be in compliance with these specifications and plans and shall be supplied by one of the following manufacturers:

1. JWC Environmental

2. Approved equal

2.02. CHAIN & RAKE UNIT(S)

A. General

1. The Chain & Rake System shall be a self-contained, screening system used to capture and transport wastewater debris to the discharge. The controller shall provide independent control of the Chain & Rake System. An interface shall be provided for the ultrasonic transducers.

2. The Chain & Rake screen consists of vertically oriented rectangular or tapered bars, spaced to create a fabricated and stiffened grid which is carried on supports spanning the channel width.

3. The bar rack extends from the invert of the channel to 6” above the maximum water level unless noted, where it shall be connected to a debris plate on which the screenings shall be lifted to the discharge apex prior to them dropping across the apron plate into a receptacle or screenings handling system.

4. The screenings are mechanically cleaned from the bar rack by rakes with tine plates mounted on carriers attached to the links of the roller chains on each side of the screen. The complete screen is constructed such that it forms a strong and rigid integral structure which is secured to the support beams which span the width of the channel.

5. The chains run over stainless steel drive sprockets keyed to the main drive shaft which is mounted in bearings and is driven by a shaft mounted motorized gear unit.

6. The screen supplier shall provide a three-year service contract. The screen supplier shall provide as part of this service contract a certified service technician to visit the site every six months for a three-year period after final acceptance. The service technician shall check each screen for proper operation, wear, make adjustments as needed, and perform training for staff.

B. Performance Data

1	Peak flow per screen	10.00 MGD
2	Waste fluid type	Domestic Wastewater
3	Channel width	36.00 inches
4	Nominal screen width	36 inches
5	Channel depth	153.00 inches
6	Amount of vertical screen recessing	None (standard installation configured)
7	Downstream water level at peak flow	28.00 inches
8	% screen panel blinding	30%
9	Head drop at % blinding	9.22 inches
10	Maximum upstream water level	37.22 inches
11	Hydraulic flow regime	Subcritical flow (standard open channel flow)

C. Design Data

1	Number of Chain & Rake Screens	1
2	Inclination angle	75 degrees
3	Bar rack bar size	5/16” x ¼” x 1 ½”
4	Bar rack bar profile	Tapered
5	Bar spacing (spacing width)	¼ inches
6	Wiper blade material	UHMW Polyethylene
7	Screen Side frame plate thickness	.187 inch (7 GA.)
8	General construction material	304L SST
9	Top of channel to operating floor (height between floors)	0.00 feet
10	Discharge height (above operating floor)	48.00 inches
11	Rake speed	19 feet / minute
12	Roller chain pitch	6 inch

13	Roller chain side plate material	316 SST
14	Roller chain roller, pin, brushing material	17-4 SST
15	Roller chain ultimate strength (per chain)	16,000 lb_f
16	Screen drive reducer type	Helical Bevel
17	Screen driver reducer ratio	380:1
18	Screen motor power	2.0 hp
19	Screen motor rating	TEFC
20	Screen motor / control panel voltage	460 volts
21	Screen motor / control panel phase	3 ph
22	Screen motor / control panel frequency	60 Hz
23	Main control panel enclosure rating	NEMA 4X
24	Local control station enclosure rating	NEMA 7

D. Components

1. Chain, Sprockets and Drive Shaft Assemblies

   a. The chains shall be roller type with stainless steel side plates. The rollers, pins, and bushings shall be hardened stainless steel. Chain material and strength shall be as specified in the Design Data section, items 12, 13, 14.

   b. The stainless steel drive shaft shall be supported on each side by grease lubricated take-up bearing assemblies.

   c. The chain shall track in a stainless steel guide system mounted in each side frame. The guide system shall incorporate UHMW wear strips.

2. Side Frames

   a. The screen shall include side frames and bracing designed to support the chain, rakes, spray wash, discharge, and drive assemblies. The side frames shall be manufactured from material and thickness as specified in the Design Data section, items 7, 8.

   b. Each side frame shall be designed to house the replaceable stainless steel and UHMW polyethylene tracking system.

   c. The bottom tracking system shall consist of a stainless steel inner and outer rings.

3. Covers

   a. The portion of the screen above the operating floor level shall have stainless steel covers.

   b. The covers shall provide quick access to the equipment for maintenance. Material of construction shall be as specified in the Design Data section, item 8.

4. Drive Assembly

   a. The screen drive assembly shall be a shaft-mounted reducer with an electric motor.

The reducer type, ratio, motor rating, and characteristics shall be as specified in the Design Data section, items 16, 17, 18, 19, 20, 21, 22.

b. The rake speed shall be as specified in the Design Data section, item 11.

5. Wiper

a. The wiper shall be stainless steel, pivoting, and be easily adjustable.

b. The wiper shall have a replaceable UHMW polyethylene blade.

6. Bar Rack

a. Bars shall be stainless steel and shaped as specified in the Design Data section, items 3, 4. The bar rack shall extend 6” above the max water level unless noted.

b. The bar spacing shall be as specified in the Design Data section, item 5. The bars shall be supported as required.

c. Each bar of the bar rack shall be removable from the bar rack assembly. Bars shall not be welded in place.

7. Rakes

a. The stainless steel rakes shall be constructed of two or more pieces and are bolted to the stainless steel chain on each side.

b. The stainless steel rake frame is designed to fasten to, support, and align the rake teeth.

c. The stainless steel rake teeth shall be machined in sections and designed to fasten to the rake frame.

8. Apron and Dead Plate

a. The apron and dead plate shall be stainless steel.

9. Discharge Chute

a. The discharge chute shall receive screened debris that has been removed from the rakes by the wiper.

b. An enclosed stainless steel discharge chute shall transport the discharge to a sluiceway, compactor, or container.

c. The height of the discharge chute from the operating floor level shall be as specified in the Design Data section, item 10.

2.03. CONTROLS

A. Components

1. PLC shall be an Allen Bradley model Micrologix 1400

2. OIT shall be a QSI model QTERM-A7

3. Circuit Breaker shall be Siemens

4. Starters shall be Allen Bradley IEC

5. Relays shall be Allen Bradley and/or IDEC

6. Pilot lights shall be Allen Bradley 22mm Type 4/4X/13

7. Selector switches shall be Allen Bradley Type 4/4X/13

8. Ultrasonic differential level system shall be Endress & Hauser

B. Control Panel

1. The control panel shall be UL/cUL listed and wired as specified in the Design Data section, items 20, 21, 22.

2. The main control panel shall be mounted remotely to the screen and contain the following switches and lights:

a. Reset push button

b. Power on light

c. Screen run light

d. Alarm light (overload)

3. The local control station shall be mounted locally to the screen and contain the following:

a. Hand/Off/Auto selector switch for the screen

b. Forward/Off/Reverse selector switch, spring returned in reverse

c. Emergency Stop push button

4. Ratings for the main control panel and local control station enclosures shall be as specified in the Design Data section, items 23, 24.

2.04. OPERATION

A. When the screen is in the Hand mode and in the Forward position the screen shall run continuously. The Reverse position is spring loaded and shall only operate in the Hand mode.

B. In the Auto Mode, the screen cycle shall start by a signal from one of the following:

1. Differential level system

2. Timer (backup)

3. Input error from transducer (loss of echo)

4. High level alarm

5. High level start

C. If the screen starts by differential level the screen shall run until the differential drops below the set point and the off timer times out.

D. If the screen starts on high level it shall run until the high level drops below the set point and the

off timer times out.

E. If one of the level transducers has an error the screen shall run continuously.

F. The screen also has a backup timer that shall allow the screen to operate periodically during periods of low activity. The timer is adjustable for both start frequency and duration of run.

2.05. SOURCE QUALITY CONTROL

A. Each Chain & Rake System and controller shall be factory tested to ensure satisfactory operation.

PART 3 - EXECUTION

3.01. INSTALLATION

A. Chain & Rake System(s), and motor controller(s) shall be installed in accordance with the supplier's installation instructions, and in compliance with all OSHA, local, state, and federal codes and regulations.

3.02. FIELD QUALITY CONTROL

A. Supplier shall provide the services of a factory-trained representative to check the installation and to start up each Chain & Rake System and controller. The factory representative shall have complete knowledge of proper installation, operation, and maintenance of equipment supplied. Representative shall inspect the final installation and supervise a start-up test of the equipment.

END OF SECTION 11330

SECTION 14060

HOIST AND TROLLEY

PART 1 - GENERAL

1.01. SCOPE

The Contractor shall furnish and install hoist and trolley as specified and as required for a complete and satisfactory installation. This section specifies a two-ton hoist capacity, shop drawings and product data submittals shall be based on hoist and trolley selected for the intended design parameters.

1.02. REFERENCES

The hoist shall be designed and manufactured in accordance with the latest editions of codes, standards, and specifications of the following:

Hoist Manufacturer's Institute Specification No. HMI-100-74 ANSI B30-16, "Overhead Hoist"

American Gear Manufacturer' Association ANSI B30-10, "Hooks"

Occupational Safety and Health (OSHA)

1.03. QUALITY ASSURANCE

A. The hoist must be the standard product of the manufacturer, employed in the production of chain geared hoist for a minimum of five consecutive years within the continental United States of America, and be a member of the Hoist Manufacturers' Institute.

B. All apparatus covered by this specification shall be constructed in a thorough and workmanlike manner. Due regard shall be given in design for the safety of operation and durability of parts.

PART 2 - PRODUCTS

2.01. TROLLEY HOIST

A. The trolley hoist shall be a low headroom hoist with an integral geared trolley.

B. The trolley hoist shall be G-NHT model as manufactured by Harrington Hoists, or equal.

C. The hoist shall be of spur-gear design with a body of malleable cast iron. Hoist brake is to be self-actuating screw type. Bearings re to be tapered roller bearings. Hoist capacity to be rated at two tons.

D. Hoist throat shall be 3-inches with a safety latch.

E. Lift height to be 10 feet.

F. Load chain of nickel-plated Grade 100 steel, electrically welded, heat treated and non-sparking.

G. Hook shall be non-sparking hook for spark resistant service.

H. Trolley shall have the ability to traverse smoothly on all types of beams.

I. Trolley shall utilize a three-bolt design to ensure stability and safety.

J. Trolley shall have adjustable suspension bolts to fit different sized beams.

K. Trolley shall have wheel break support and anti-tilt device.

L. Trolley shall use stainless steel hand chain.

M. Trolley shall be equipped with drop stops and rubber bumpers.

N. Trolley shall have a safety factor of 5:1.

O. Trolley wheels shall have lubricated bearings.

PART 3 - EXECUTION

3.01. INSTALLATION

A. The equipment shall be erected by the Contractor in accordance with the manufacturer's printed instructions. The Contractor shall be responsible for any additional supports required to provide a safe operating system, and these supports shall be furnished and installed by the Contractor.

3.02. TOOLS, SUPPLIES AND SPARE PARTS

A. The equipment manufacturer shall furnish all special tools necessary to disassemble, serve, repair and adjust the equipment and one year's supply of all recommended lubricant oils and greases.

END OF SECTION

SECTION 15100

VALVES AND APPURTENANCES

PART 1 - GENERAL

1.01. SCOPE OF WORK

A. Furnish all labor, materials, equipment and incidentals required to install complete and ready for operation all valves and appurtenances complete with all accessories as shown on the Drawings and as specified herein.

B. The equipment shall include, but not be limited to the following:

1. Check valves
2. Plug valves
3. Gate valves
4. Backflow preventers
5. Post hydrants

C. Piping appurtenances shall include, but not be limited to the following:

1. Plugs and caps
2. Flexible connectors
3. Quick connect couplings
4. Miscellaneous adaptors
5. Pressure gauges

1.02. SUBMITTALS

A. Submit materials required to establish compliance with these Specifications in accordance with Section 01340 for shop drawings. Submittals shall include the following:

1. Manufacturer’s literature, illustrations, specifications and engineering data including, dimensions, size, material of construction, weight, coatings, and actuator weight.

B. Certificates

1. Certificates of compliance where required by referenced standards: For each valve specified to be manufactured and/or installed in accordance with AWWA and other standards, submit an affidavit of compliance with the appropriate standards, including certified results of required tests and certification of proper installation.

1.03. REFERENCE STANDARDS

Work in this section shall be in compliance with the following unless specified otherwise.

A. AWWA C508 - Swing Check Valves

B. AWWA C517 – Eccentric Plug Valves

C. ANSI B16.1 - Cast-Iron Pipe Flanges and Flanged Fittings.

D. ANSI C111 - Rubber-Gasket Joints for Ductile-Iron and Gray-Iron Pressure Pipe and Fittings.

E. ASTM A48 - Gray Iron Castings.

F. ASTM A126 - Gray Iron Castings for Valves, Flanges and Pipe Fittings

G. ASTM A153 - Zinc Coating (Hot-Dip) on Iron and Steel Hardware

H. ASTM A276 - Standard Specification for Stainless and Heat Resisting Steel Bars and Shapes.

I. ASTM A536 - Ductile Iron Castings.

J. Where reference is made to one of the above standards, the revision in effect at the time of bid opening shall apply.

1.04. QUALITY ASSURANCE

A. All of the types of valves and appurtenances shall be products of well-established firms who are fully experienced, reputable and qualified in the manufacture of the particular equipment to be furnished. The equipment shall be designed, constructed and installed in accordance with the best practices and methods and shall comply with these specifications as applicable.

B. All units of the same type shall be the product of one manufacturer.

C. All items shall be new and unused.

1.05. SYSTEM DESCRIPTION

A. All of the equipment and materials specified herein is intended to be standard for use in controlling the flow of domestic wastewater.

B. All valves, appurtenances and miscellaneous items shall be installed as shown on the Drawings and as specified so as to form a complete workable system.

C. All valves, except stainless steel, shall be epoxy coated on the interior and exterior.

PART 2 - PRODUCTS

2.01. GENERAL

A. Valves shall have the name of the maker, nominal size, flow directional arrows, working pressure for which they are designed and standard to which they are manufactured cast in raised letters on some appropriate part of the body.

B. Unless otherwise noted, valves shall have a minimum working pressure of 200 psi or be of the same working pressure as the pipe they connect to, whichever is higher and suitable for the pressures where they are installed.

C. Valves shall be of the same nominal diameter as the pipe or fittings they are connected to. Except as otherwise noted, buried valves shall be mechanical joints, with joint restraint, and open counter-clockwise.

D. Exposed Valves shall be flanged for 4 inch and larger.

E. Unless otherwise noted, valves shall be manually actuated; non-buried valves shall have an operating wheel mounted on the operator; buried valves and those with operating nuts shall have a non-rising stem with an AWWA 2-in nut.

F. All actuators shall be capable of moving the valve from the full open to full close position and in reverse and holding the valve at any position part way between full open or closed. Each operating device shall have cast on it the word “OPEN” or “CLOSE” and an arrow indicating the direction of operation.

2.02. VALVES

A. CHECK VALVES

1. Check valves shall be swing type and shall meet the requirements of AWWA C508. The valves shall be iron body, bronze mounted, single disc, 200 psi minimum working water pressure.

2. Valve shall provide a full flow area in the open position.

3. Check valves shall have bronze seat and body rings, extended bronze or stainless-steel hinge pins and stainless-steel nuts and bolts on covers.

4. Valves shall be constructed that disc and body seat may be removed and replaced without removing the valve from the line. Valves shall be fitted with an extended hinge arm with outside lever and spring. The spring tension shall be adjustable to minimize water hammer. Lever shall be installed to be horizontal in closed position.

5. Check valves shall be Golden Anderson, Mueller, or equal.

B. PLUG VALVES

1. Plug valves shall be of the non-lubricated, eccentric plug design with cast iron body conforming to ASTM A 126 - Gray Iron Castings for Valves, Flanges, and Pipe Fittings, with ANSI 125 lb. flanged ends. The plug and shaft shall be of cast iron or ductile iron conforming to ASTM A 536 - Ductile Iron Castings, and the plug shall be lined with a resilient coating, best suited for sewage service. The body shall be epoxy-lined in accordance with the manufacturer's standard for sewage service. The seats shall be of nickel or stainless steel welded to the body. All top and bottom shaft bearings shall be of permanently lubricated stainless steel or Teflon coated stainless steel. Grit seals of Teflon or similar suitable material shall be at the top and bottom plug journals. Valve shall have an unobstructed port area of not less than 100 percent of full pipe area. Valve shall have a pressure rating of not less than 175 psi WOG in both directions. The stem seal shall consist of field adjustable packing, replaceable without removal of the actuator, or of self-adjusting U-cup packing.

2. Valves shall have flanged ends. Valves shall be operated by electric actuators controlled by a relay signal from a level probe. Electric actuators shall be per Paragraph 2.03, F of this Section. Level control shall be per Paragraph 2.03, G of this Section. All exposed nuts, bolts, springs and washers shall be stainless steel.

3. The valves shall be Golden Anderson, Dezurick, or equal.

C. GATE VALVES

1. Gate valves shall be resilient seat gate valve and shall fully comply with the latest revision of AWWA C509, and shall also be UL listed and FM approved. The valves shall be tested and certified to ANSI/NSF 61 and shall have a 250 psig working pressure.

2. The valve type shall be NRS (non-rising stem). Valves shall be provided with a 2" square-operating nut for buried valves and a handwheel for exposed valves. Valves shall have an arrow cast on the operating nut or handwheel showing opening direction, which shall be counterclockwise. The bolt that attaches the operating nut to the stem shall be recessed into the operating nut so as not to interfere with valve wrench operation.

3. The valve stem shall be made of bronze ASTM B-132 alloy C67600 bar stock material. The stem shall have at least one "anti-friction" thrust washer above and below the stem collar to reduce operating torque. The design of the NRS valve stem shall be such that if excessive

input torque is applied, stem failure shall occur above the stuffing box at such a point as to enable the operation of the valve with a pipe wrench or other readily available tool. The stem material shall provide a minimum 70,000psi tensile strength with 15% elongation and yield strength of 30,000psi.

4. The valve shall have a stuffing box that is O-ring sealed. Two O-rings shall be placed above and one O-ring below the stem thrust collar. The thrust collar shall be factory lubricated. The thrust collar and its lubrication shall be isolated by the O-rings from the waterway and from outside contamination providing permanent lubrication for long term ease of operation.

5. All buried valves shall be furnished with extension stems, as necessary, to bring the operating nut to within 30-inches of the top of the valve box. Connection to the valve shall be with a wrench nut coupling and a set screw to secure the coupling to the valve's operating nut. The coupling and square wrench nut shall be welded to the extension stem. Extension stems shall be equal to Mueller A-26441; M & H Valve Style 3801; or equal.

6. The valve body, bonnet, stuffing box, and disc shall be composed of ASTM A-126 Class B grey iron or ASTM A395 or A536 ductile iron. The body and bonnet shall also adhere to the minimum wall thickness as set forth in Table 2, section 4.3.1 of AWWA C509. All exterior bolts and nuts for the valves shall be Type 304 stainless steel.

7. The valve disc and guide lugs must be fully (100%) encapsulated in SBR ASTM D2000 rubber material. The peel strength shall not be less than 75 pounds per inch. Guide caps of an acetyl bearing material shall be placed over solid guide lugs to prevent abrasion and to reduce the operating torque.

8. The valve shall have all internal and external ferrous surfaces coated with a fusion bonded thermosetting powder epoxy coating of 10 mils nominal thickness. The coating shall conform to AWWA C550.

9. Gate valves shall be Mueller, Kennedy, M&H, or equal.

2.03. APPURTENANCES

A. PLUGS AND CAPS

1. The Contractor shall provide, install, and remove standard plugs or caps as required for testing. Plugs and caps shall be suitable for permanent service.

2. The Contractor shall plug, cap or otherwise cover all piping work in progress.

3. Permanent plugs for pipelines to be abandoned in place shall be designed for the type of pipe used and shall be firmly and positively attached after pipeline has been filled.

B. FLEXIBLE CONNECTORS

1. Flexible connectors shall be sleeve type couplings.

a. Lugs shall be in accordance with ASTM A36.

b. Washers shall be in hardened steel in accordance with ASTM A325.

c. Plastic plugs shall be fitted in coupling to protect bolt holes.

d. Nuts and bolts shall be in accordance with ASTM A307 and ANSI B1.1 with hexagonal or square heads, coarse thread fit, threaded full length with ends chamfered or rounded. Bolt ends shall project 1/4-in beyond surface of nuts. Hexagonal nuts shall have dimensions in accordance with ANSI B18.2.

2. Middle ring of each mechanical coupling shall have a thickness at least equal to that specified for size of pipe on which coupling is to be used and shall not be less than 10-in long for pipe 30-in and larger and not less than 7-in long for pipe under 30-in in diameter.

3. Sleeves and harnesses shall be coated with manufacturer's standard fusion bonded epoxy.

4. Gaskets shall be Nitrile NSF 61 or other composition suitable for exposure to untreated sewage.

5. Sleeve-coupled joints shall be anchored with harness bolts. Harness bolts shall be of sufficient length, with harness lugs placed so that coupling can be slipped at least in one direction to clear joint. Harness bolts shall be of sufficient number and strength to withstand test pressure as recommended in AWWA M-11.

6. Similar insulation type sleeve couplings shall be provided at the face of buildings, between different type metals, or where otherwise noted.

7. In addition to those locations noted on the Drawings, sleeve couplings shall be provided on all piping where it connects with a structure or is buried directly under a structure at the structure's expansion joints.

8. Unless otherwise specified with the individual type of pipe, sleeve couplings shall be Victaulic Depend-O-Lok F x F (self-restrained); Smith Blair Style 411; Dresser Style 38, or approved equal, with the pipe stop removed.

C. QUICK CONNECT COUPLINGS

1. Couplings shall be of the cam and groove type consisting of a male adapter conforming to MIL-C-27487. Male adapters shall be designed to receive a female coupler without requiring threading, bolting, or tools. Connections shall remain tight and leakproof under pressures up to 100 psig. Each adapter shall be furnished with a dust cap complete with a 18-in long security chain of corrosion resistant material. Couplings shall be by Civacon, a Division of Dover Corporation; Ever-tite or equal.

2. Adapters shall be furnished in accordance with the Drawings, or as required by the installation.

D. MISCELLANEOUS ADAPTORS

1. Between different types of pipe and/or fittings special adapters may be required to provide proper connection. Some of these may be indicated on the Drawings or specified with individual types of pipe or equipment. However it is the Contractor’s responsibility to ensure proper connection between various types of pipe, to structures and between pipe and valves, gates, fittings and other appurtenances. Provide all adapters as required, whether specifically noted or not.

2. As required, these adapters shall be suitable for direct bury, with proper dielectric insulation (if necessary) and if metallic and not stainless steel, with two coats of high solids Epoxy.

E. PRESSURE GAUGES

1. Bosses, connections, or nipples for gauges shall be provided as acceptable to the Engineer. Unbossed tappings will not be acceptable. Where gauge tappings are not available in the pump suction or discharge flange, the necessary tapping in the adjacent piping shall be made.

2. Gauges shall be provided as part of a complete factory assembly, including gauge, snubber, diaphragm seal, liquid fill, ball valve for isolation, back flushing connection, and threaded stainless steel connecting piping.

3. Pressure gauges shall have a Type 316 stainless steel case, a 4 inch minimum diameter dial face, a full-sized Type 316 stainless steel Bourdon tube, and Type 316 stainless steel movement. The gauges shall be liquid filled with glycerin and shall be provided with a filler/breather cap. The socket shall be 1/4 inch NPT Type 316 stainless steel with a bottom connection and the dial shall be a white background with black markings. Gauges shall be ANSI Grade A plus or minus 1 percent of scale and shall have a blow-out back design.

4. Gauges shall be provided from standard ranges of the manufacturer, graduated in feet for the specific application, as approved by the Engineer.

5. Diaphragm seals shall be minimum 2-1/2 inch diameter, or as required for the connected pressure gauges. The diaphragm shall be “thread attached” to both piping and pressure gauges. The Contractor shall provide mineral oil fill between the diaphragm seal and the gauge.

    a. Diaphragm seals shall have an upper housing of cadmium or nickel plated carbon steel, with the lower housing of Type 304 stainless steel and Type 316 stainless steel bolts. Diaphragms shall be Teflon.

    b. Each diaphragm seal shall be connected to its respective piping or equipment with threaded stainless steel pipe and fittings. Pipe size, isolation valve size, and diaphragm tap size shall match the size of the tap on the equipment or piping, but shall not be less than 1/2 inch.

    c. Each diaphragm seal shall have a minimum 1/4 inch NPT flush connection.

    d. Pulsation dampeners shall be provided and shall be adequate to prevent pulsation and/or vibration of the gauge indicator under all system operating conditions.

6. Gauges shall be manufactured by U.S. Gauge; Ashcroft, Trerice or equal. Diaphragm seals shall be Type SG by Mansfield and Green; Ashcroft or equal.

F. ELECTRIC MOTOR ACTUATORS

1. General

    a. Equipment Requirements: Where electric motor actuators are indicated, an electric motor-actuated valve control unit shall be attached to the actuating mechanism housing by means of a flanged motor adapter piece.

    b. Gearing: The motor actuator shall include the motor, reduction gearing, reversing starter, torque switches, and limit switches in a weather-proof NEMA 4 assembly. The actuator shall be a single or double reduction unit consisting of spur or helical gears and worm gearing. The spur or helical gears shall be of hardened alloy steel and the worm gear shall be alloy bronze. Gearing shall be accurately cut with hobbing machines. Power gearing shall be grease- or oil-lubricated in a sealed housing. Ball or roller bearings shall be used throughout. Actuator output speed changes shall be mechanically possible by simply removing the motor and changing the exposed or helical gearset ratio without further disassembly of the actuator.

    c. Starting Device: Except for modulating valves, the unit shall be so designed that a hammer blow is imparted to the stem nut when opening a closed valve or closing an open valve. The device should allow free movement at the stem nut before imparting the hammer blow. The actuator motor must attain full speed before stem load is encountered.

    d. Switches

i. Electronic Type Switches: Limit switches or valve position shall be sensed by a 15 bit, optical, absolute position encoder. The open and closed positions shall be stored in a permanent, non-volatile memory. The encoder shall measure valve position continuously, including both motor and hand wheel operation, with or without use of battery. An electronic torque sensor shall be furnished. The torque limit may be adjusted from 40 to 100 percent of rating in 1 percent increments. The motor shall be de-energized if the torque limit is exceeded. A boost function shall be included to prevent torque trip during initial valve unseating, and a “jammed valve” protection feature with automatic retry sequence shall be incorporated to de-energize the motor if no movement occurs.

ii. The actuator shall be wired in accordance with the manufacturer’s requirements. Wiring for external connections shall be connected to marked terminals. One 1-inch and one 1-1/4-inch conduit connection shall be provided in the enclosing case. A calibration tag shall be mounted near each switch correlating the dial setting to the unit output torque. Switches shall not be subject to breakage or slippages due to over-travel. Traveling-nuts, cams, or micro switch tripping mechanisms shall not be used. Limit switches shall be of the heavy-duty open contact type with rotary wiping action.

e. Handwheel Operation: A permanently attached handwheel shall be provided for emergency manual operation. The handwheel shall not rotate during electrical operation. The maximum torque required on the handwheel under the most adverse conditions shall not exceed 60-lb.ft, and the maximum force required on the rim of the handwheel shall not exceed 60-lb. An arrow and either the word "open" or "close" shall be cast or permanently affixed on the handwheel to indicate the appropriate direction to turn the handwheel. A clutch lever shall be provided to put actuator into handwheel operation. Valves with electric motor actuators having stems more than 7-feet above the floor shall be provided with chain activator handwheels. The clutch lever shall be provided with a cable secured to the chain to allow disengagement for manual operation.

f. Motor: The motor shall be of the totally enclosed, non-ventilated, high-starting torque, low-starting current type for full voltage starting. It shall be suitable for operation on 480-volt, 3-phase, 60-Hz current, and have Class F insulation and a motor frame with dimensions in accordance with the latest revised NEMA MG Standards. The observed temperature rise by thermometer shall not exceed 55 degrees C above an ambient temperature of 40 degrees C when operating continuously for 15 minutes under full rated load. With a line voltage ranging between 10 percent above to 10 percent below the rated voltage, the motor shall develop full rated torque continuously for 15 minutes without causing the thermal contact protective devices imbedded in the motor windings to trip or the starter overloads to drop-out. Bearings shall be of the ball type and thrust bearings shall be provided where necessary. Bearings shall be provided with suitable seals to confine the lubricant and prevent the entrance of dirt and dust. Motor conduit connections shall be watertight. Motor construction shall incorporate the use of stator and rotor as independent components from the valve operation such that the failure of either item shall not require actuator disassembly or gearing replacement. Two Class B thermal contacts or solid-state thermistors imbedded within the motor windings shall be provided to protect against over-temperature damage. The motor shall be provided with a 120VAC space heater, powered from the actuator transformer, unless the entire actuator is a hermetically sealed, non-breathing design with a separately sealed terminal compartment which prevents moisture intrusion. Each electric motor actuator shall be provided with a local disconnect switch or circuit breaker to isolate power from the motor and controller during maintenance activities.

g. Open/Close Operating Speed: Unless otherwise indicated, electric actuators shall provide a full close to full open or full open to full close operating time range from 5 to 10 seconds.

h. Valves with electric motor actuators where the valve centerline is located at a height greater than 6-feet above the floor shall provide a remote actuator control station at a location no higher than 4-feet above the floor. The CONTRACTOR shall provide conduit and wiring

between the actuator controls and the valve actuator for these applications. The actuator controls shall be wall-mounted beneath the valve at a location approved by the ENGINEER.

2. Electric Motor Actuators (Ac Reversing Control Type)

a. General: Where indicated, electric motor actuators shall be the AC reversing type complete with local control station with open/close and local/remote selector switches.

b. Actuator Appurtenances: The actuator for each valve shall be supplied with open and close status lights; open, close and lockout/stop push buttons; and other devices indicated.

c. Starter: The starter shall be a suitably sized amperage rated reversing starter with its coils rated for operation on 480 volt, 3 phase, 60 Hz current. A control power transformer shall be included to provide a 120 volt source, unless otherwise indicated. The starter shall be equipped with 3 overload relays of the automatic reset type. Its control circuit shall be wired as indicated. The integral weatherproof compartment shall contain a suitably sized 120 volt ac, single phase, 60-Hz space heater to prevent moisture condensation on electrical components. A local power disconnect switch, of NEMA 4X stainless steel, shall be provided with each actuator. A close-coupled, pad lockable switch shall be provided with each actuator.

d. Local Control Station: Each actuator shall be provided with a local control station with the valve actuator assembly. The station shall include open, close, and stop push buttons, and a local/remote selector switch. The local control station and local power disconnect may be provided as an integral part of the actuator or as otherwise indicated or required to permit operation by a person at floor elevation and within sight of the valve actuator.

e. Manufacturers, or equal:

i. Limitorque Corp

ii. Rotork

G. LEVEL CONTROL FOR PLUG VALVE CONTROL

1. Contractor shall provide a complete PLC based level control system for indicated valves. The system shall consist of a level probe and controller that will send a signal to the valve actuator to open or close based on liquid level.

2. The system shall operate on 120-volt, single phase power and be a stand-alone unit intended for use in hazardous locations.

3. The system shall be based on Endress-Houser Liquipoint T level probe, or equal.

PART 3 - EXECUTION

3.01. INSPECTION AND PREPARATION

A. During installation of all valves and appurtenances, verify that all items are clean, free of defects in material and workmanship and function properly.

3.02. VALVES

A. Buried valves shall be cleaned and manually operated before installation. Gate valves and boxes shall be set with the operating stem vertically aligned in the center of the valve box. Valves shall

be set on a firm foundation and supported by tamping pipe-bedding material under the sides of the valve.

B. Before backfilling buried valves, all exposed portions of any bolts shall be coated with two coats of bituminous paint comparable to Bitumastic No. 50 by Kop-Coat, Inc. or equal.

3.03. FIELD TESTS AND ADJUSTMENTS

A. Conduct a functional field test of each valve, including actuators and valve control equipment, in presence of Engineer to demonstrate that each part and all components together function correctly. All testing equipment required shall be furnished by the Contractor.

END OF SECTION

SECTION 15254

STAINLESS STEEL GATES

PART 1 – GENERAL

1.01 SCOPE OF WORK

A. The CONTRACTOR shall furnish all labor, materials, equipment, and incidentals required to install, ready for operation and field test stainless steel gates and appurtenances as shown on the Contract Drawings and as specified herein.
B. The gates and appurtenances shall be supplied in accordance with the latest edition of AWWA C561 Standard for Fabricated Stainless Steel Slide Gates as modified herein. The allowable leakage rate for the stainless-steel gates in this specification shall be 1/2 the allowable leakage listed in the latest revision of AWWA C561.

1.02 SUBMITTALS

A. Provide the following information to confirm compliance with the specification in addition to the submittal requirements specified in Section 01300 - SUBMITTALS
   1. Complete description of all materials including the material thickness of all structural components of the frame and slide.
   2. Installation drawings showing all details of construction, details required for installation, dimensions and anchor bolt locations.
   3. Maximum bending stress and deflection of the slide under the maximum design head.
   4. The location of the company headquarters and the location of the principal manufacturing facility. Provide the name of the company that manufactures the equipment if the supplier utilizes an outside source.

1.03 QUALITY ASSURANCE

A. Qualifications
   1. All of the equipment specified under this Section shall be furnished by a single manufacturer with a minimum of 20 years' experience designing and manufacturing water control gates. The manufacturer shall have manufactured water control gates for a minimum of 100 projects.
   2. Any gate imported into the United States must be fully shop tested at a test location within the US and shall be witnessed by a representative of the engineer. The cost of travel for the Engineer's representative shall be borne by the gate manufacturer.

PART 2 – EQUIPMENT

2.01 GENERAL

A. Gates shall be as specified herein and have the characteristics and dimensions shown on the Contract Drawings.
B. Leakage shall not exceed 0.05 gpm/ft of wetted seal perimeter in seating head and unseating head conditions.
C. The gate shall utilize self-adjusting seals. Due to the difficulty of accessing gates when they are in service, gates that utilize adjustable wedges, wedging devices or pressure pads are not acceptable.
D. All structural components of the frame and slide shall be fabricated of stainless steel having a minimum thickness of 1/4-inch and shall have adequate strength to prevent distortion during normal handling, during installation and while in service.
E. Slide gate frames shall be shipped fully assembled with the invert member welded to the side frames and the slide installed in the frame unless the overall width of the slide gate exceeds 96 inches or the overall height of the slide gate exceed 25 feet.

F. All welds shall be performed by welders with AWS D1.6 certification.
G. Finish: Mill finish on stainless steel. Welds shall be sandblasted to remove weld burn and scale. All iron and steel components shall be properly prepared, and shop coated with a primer.
H. Materials:

Components	Materials
Frame Assembly and Retainers	Stainless Steel, Type 316L, ASTM A240
Slide and Stiffeners	Stainless Steel, Type 316L, ASTM A240
Stem	Stainless Steel, Type 316, ASTM A276
Anchor Studs	Stainless Steel, Type 316, ASTM A276
Fasteners and Nuts	Stainless Steel, Type 316, ASTM F593/F594
Invert Seal (Upward Opening Gates Only)	Neoprene or EPDM ASTM D-2000
Seat/Seals and Facing	Ultra-High Molecular Weight Polyethylene ASTM D4020
Lift Nuts	Bronze ASTM B584
Pedestals and Wall Brackets	Stainless Steel, Type 316L, ASTM A240
Operator Housing	Stainless Steel, Type 316 ASTM A743

I. Gates shall be Whipps 900 Series, Rodney Hunt A Series, or equal.

2.02 FRAME

A. The frame assembly, including the guide members, invert member and yoke members, shall be constructed of formed stainless steel plate with a minimum thickness of 1/4-inch.
   1. Frame design shall allow for embedded mounting, mounting directly to a wall with stainless steel anchor bolts and grout or mounting to a wall thimble with stainless steel mounting studs and a mastic gasket material. Mounting style shall be as shown on the Contract Drawings.
   2. All wall mounted or wall thimble mounted gates shall have a flange frame. Flat frame gates are not acceptable.
   3. The structural portion of the frame that incorporates the seat/seals shall be formed into a one-piece shape for rigidity. Guide members that consist of two or more bolted structural members are not acceptable. Guide member designs where water loads are transferred through the assembly bolts are specifically not acceptable.
   4. Gussets shall be provided as necessary to support the guide members in an unseating head condition. The gussets shall extend to support the outer portion of the guide assembly and shall be positioned to ensure that the load is transferred to the anchor bolts, or the wall thimble studs.
   5. The frame shall extend to accommodate the entire height of the slide when the slide is in the fully opened position on upward opening gates or downward opening weir gates.
   6. On self-contained gates, a yoke shall be provided across the top of the frame. The yoke shall be formed by two structural members affixed to the top of the side frame members to provide a one-piece rigid assembly. The yoke shall be designed to allow removal of the slide. The Yoke shall be sized to withstand normal operating loads as well as the maximum hoist output. The Yoke deflection shall not exceed 1/360 of the gate width or a maximum of ¼" whichever is less at maximum operating load.
   7. A rigid stainless steel invert member shall be provided across the bottom of the opening. The invert member shall be of the flush bottom type on upward opening gates.
   8. A rigid stainless steel top seal member shall be provided across the top of the opening on gates designed to cover submerged openings.
   9. A rigid stainless-steel member shall be provided across the invert of the opening on downward opening weir gates.

2.03 SLIDE

A. The slide and reinforcing stiffeners shall be constructed of stainless-steel plate. All structural components shall have a minimum thickness of 1/4-inch.
   1. The slide shall not deflect more than 1/720 of the span or 1/16 inch, whichever is smaller, under the maximum design head.
   2. When the width of the gate opening in feet multiplied by the maximum design head in feet is greater than 80 square feet the portion of the slide member that engages the guide shall be 1/2" thick. When the width of the gate opening in feet multiplied by the maximum design head in feet is greater than 120 square feet, the portion of the slide that engages the guide members shall be of a "thick edge" design. The thick edge portion of the slide shall have a minimum thickness of 2.5 inches.
   3. Reinforcing stiffeners shall be welded to the slide and mounted horizontally*. Vertical stiffeners shall be welded on the outside of the horizontal stiffeners for additional reinforcement.* When required to maintain proper plate stress and deflection intermediate vertical gussets shall be provided. Appropriate safety factors shall be applied to the ultimate tensile and yield strength of the material.
   4. The stem connector shall be constructed of two angles or plates. The stem connector shall be welded to the slide. A minimum of two bolts shall connect the stem to the stem connector.

2.04 SEALS

A. All gates shall be provided with a self-adjusting seal system to restrict leakage in accordance with the requirements listed in this specification.
   1. All gates shall be equipped with UHMW polyethylene seat/seals to restrict leakage and to prevent metal to metal contact between the frame and slide. Seat contact pressure shall not exceed 600 psi at the design head.
   2. The seat/seals shall extend to accommodate the 1-1/2 x the height of the slide when the slide is in the fully closed or fully opened position.
   3. All upward opening gates shall be provided with a resilient seal to seal the bottom portion of the gate. The seal shall be attached to the invert member, or the bottom of the slide and it shall be held in place with stainless steel attachment hardware.
   4. All downward opening weir gates shall be provided with UHMW polyethylene seat/seals across the invert member.
   5. The seal system shall be durable and shall be designed to accommodate high velocities and frequent cycling without loosening or suffering damage.
   6. All seals must be bolted or otherwise mechanically fastened to the frame or slide. Arrangement with seals that are force fit or held in place with adhesives are unacceptable.
   7. The seals shall be mounted so as not to obstruct the water way opening.
   8. Gates that utilize rubber "J" seals or "P" seals are not acceptable.
   9. The seal system shall have been factory tested to confirm negligible wear (less than 0.01") and proper sealing. The factory testing shall consist of an accelerated wear test comprised of a minimum of 25,000 open-close cycles using a well-agitated sand/water mixture to simulate fluidized grit.

2.05 STEM

A. A threaded operating stem shall be utilized to connect the operating mechanism to the slide. On rising stem gates, the threaded portion shall engage the operating nut in the manual operator or motor actuator. On non-rising stem gates, the threaded portion shall engage the nut on the slide.
   1. The threaded portion of the stem shall have a minimum outside diameter of 1-1/2 inches.
   2. The stem shall be constructed of solid stainless-steel bar for the entire length, the metal having a tensile strength of not less than 75,000 psi. Stem extension pipes are not acceptable.
   3. The stem shall be threaded to allow full travel of the slide unless the travel distance is otherwise shown on the Contract Drawings.
   4. Maximum L/R ratio for the unsupported part of the stem shall not exceed 200.

5. The operating stem shall be designed to transmit in compression at least 2 times the rated hoist output with an effort of 40 lb on the crank or handwheel. The Euler column formula shall be utilized. Where a hydraulic or electric actuator is used, the stem design load shall not be less than 1.25 times the output thrust of the hydraulic cylinder with a pressure equal to the maximum working pressure of the fluid supply or 1.25 times the output thrust of the electric actuator at the stalled condition.
6. The stem shall be designed to withstand the tension load caused by the application of a 40 lb effort on the crank or handwheel without exceeding 1/5 of the ultimate tensile strength of the stem material.
7. The threaded portion of the stem shall have machine rolled threads of the full Acme type with a 16-microinch finish or better. Stub threads are not acceptable.
8. Stems of more than one section shall be joined by stainless steel or bronze couplings. The coupling shall be bolted to the stems.
9. Stems, on manually operated gates, shall be provided with adjustable stop collars to prevent over closing of the slide.

2.06 STEM GUIDES

A. Stem guide shall be provided when necessary to ensure that the maximum L/R ratio for the unsupported part of the stem is 200 or less.
   1. Stem guide brackets shall be fabricated of stainless steel and shall be outfitted with UHMW or bronze bushings.
   2. Adjustable in two directions.

2.08 MANUAL OPERATORS

A. Unless otherwise shown on the Drawings, gates shall be operated by a manual handwheel or a manual crank-operated gearbox. The operator shall be mounted on the yoke of self-contained gates or on the pedestal of non-self-contained gates.
   1. The gate manufacturer shall select the proper gear ratio to ensure that the gate can be operated with no more than a 40 lb effort when the gate is in the closed position and experiencing the maximum operating head.
   2. An arrow with the word "OPEN" shall be permanently attached or cast onto the operator to indicate the direction or rotation to open the gate.
   3. Crank-operated gearboxes shall be fully enclosed and shall have a 316 Stainless Steel housing.
      a. Gearboxes shall have either single or double gear reduction depending upon the lifting capacity required.
      b. Gearboxes shall be provided with a threaded cast bronze lift nut to engage the operating stem.
      c. Bearings shall be provided above and below the flange on the operating nut to support both opening and closing thrusts.
      d. Gears shall be steel with machined cut teeth designed for smooth operation.
      e. The pinion shaft shall be stainless steel and shall be supported on ball or tapered roller bearings.
      f. Positive mechanical seals shall be provided on the operating nut and the pinion shafts to exclude moisture and dirt and prevent leakage of lubricant out of the hoist.
      g. The crank shall be cast aluminum or cast iron with a revolving nylon grip.
      h. The crank shall be removable.
   4. All gates having widths more than 72 inches and widths greater than twice their height shall be provided with two gearboxes connected by an interconnecting shaft for simultaneous operation.
      a. Interconnecting shafting shall be constructed of aluminum or stainless steel.
      b. Flexible couplings shall be provided at each end of the interconnecting shaft. Couplings shall be stainless steel or non-metallic.
      c. One crank shall be provided to mount on the pinion shaft of one of the gearboxes.
      d. If the operating assembly is motorized, a stainless-steel enclosure shall be provided over the interconnecting shaft to comply with OSHA regulations.

5. An extended operator system utilizing chain and sprockets shall be furnished by the manufacturer when the centerline of the crank or handwheel, on a non-geared operator, is located over 48-in above the operating floor. Chain wheels are not acceptable.
    a. A removable stainless steel or aluminum cover shall be provided to enclose chain and sprockets.
    b. The extended operator system shall lower the centerline of the pinion shaft to 36-in above the operating floor.
    c. A handwheel may be utilized in conjunction with a gearbox in lieu of the extended operator system if the centerline of the pinion shaft is 60-in or less above the operating floor.
6. Pedestals shall be constructed of stainless steel. Aluminum pedestals are not acceptable.
    a. The pedestal height shall be such that the handwheel or pinion shaft on the crank-operated gearbox is located approximately 36-in above the operating floor.
    b. Wall brackets shall be used to support floor stands where shown on the Drawings and shall be constructed of stainless steel.
    c. Wall brackets shall be reinforced to withstand in compression at least two times the rated output of the operator with a 40 lb effort on the crank or handwheel.
    d. The design and detail of the brackets and anchor bolts shall be provided by the gate manufacturer and shall be approved by the ENGINEER. The gate manufacturer shall supply the bracket, anchor bolts and accessories as part of the gate assembly.
7. Operators shall be equipped with fracture-resistant clear butyrate or Lexan plastic stem covers.
    a. The top of the stem cover shall be closed.
    b. The bottom end of the stem cover shall be mounted in a housing or adapter for easy field mounting.
    c. Stem covers shall be complete with indicator markings to indicate gate position.
8. When shown on the Contract Drawings, provide 2-inch square nut, mounted in a floor box, with a non-rising stem.
    a. The square nut shall be constructed of bronze.
    b. The floor box shall be constructed of stainless steel or cast iron and shall be set in the concrete floor above the gate as shown.
    c. Provide one aluminum or stainless-steel T-handle wrench for operation.

2.09 ANCHOR BOLTS

A. Anchor bolts shall be provided by the gate manufacturer for mounting the gates and appurtenances.
    1. Quantity and location shall be determined by the gate manufacturer.
    2. If epoxy type anchor bolts are provided, the gate manufacturer shall provide the studs and nuts.
    3. Anchor bolts shall have a minimum diameter of 1/2-inch.

PART 3 – EXECUTION

3.01 INSTALLATION

A. Installation of the gates and appurtenances shall be done in a workmanlike manner. It shall be the responsibility of the CONTRACTOR to handle, store and install the equipment specified in this Section in strict accordance with the manufacturer's recommendations.

B. The CONTRACTOR shall review the installation drawings and installation instruction prior to installing the gates.

C. The gate assemblies shall be installed in a true vertical plane, square and plumb.

D. The CONTRACTOR shall fill the void in between the gate frame and the wall with non-shrink grout as shown on the installation drawing and in accordance with the manufacturer’s recommendations.

E. The CONTRACTOR shall add a mastic gasket between the gate frame and wall thimble (when applicable) in accordance with the manufacturer’s recommendations.

3.02 FIELD TESTING

A. After installation, all gates shall be field tested in the presence of the ENGINEER and OWNER to ensure that all items of equipment are in full compliance with this Section. Each gate shall be cycled to confirm that they operate without binding, scraping, or distorting. The effort to open and close manual operators shall be measured and shall not exceed the maximum operating effort specified above. Electric motor actuators shall function smoothly and without interruption. Each gate shall be water tested by the CONTRACTOR, at the discretion of the ENGINEER and OWNER, to confirm that leakage does not exceed the specified allowable leakage.

3.03 MANUFACTURERS FIELD SERVICE

A. Installation and Startup Assistance: Service and testing assistance by the manufacturer's engineering representative for each gate and valve shall be furnished by the CONTRACTOR during installation and startup.
B. Instruction of OWNER's Personnel: The CONTRACTOR shall arrange for the services of a factory service representative to instruct the OWNER's personnel in the operation and maintenance of the equipment.

3.3 QUALITY ASSURANCE

A. Equipment Field Testing: The CONTRACTOR shall be responsible for the coordination of the tests of each hydraulic gate in the presence of the manufacturer's factory service representative. Excessive leaks shall be corrected and the equipment retested until found satisfactory.

END OF SECTION

SECTION 15700

VENTILATION EQUIPMENT

PART 1 - GENERAL

1.01. SCOPE

A. The work covered by this section shall include furnishing and the installation of pump room ventilation consisting of the following basic items of work:

1. Pump Station Exhaust Fan and Air Intake Louver

PART 2 - PRODUCTS

2.01. PUMP STATION PUMP ROOM EXHAUST FAN AND AIR INTAKE LOUVER

A. Contractor shall provide and install a sidewall exhaust fan which meets the following requirements:
   a. Flowrate = 2,500 CFM
   b. Electrical: 120V, 1 Ph, 60 Hz
   c. Motor: 1/3 HP
   d. Fan airflow direction: Exhaust
   e. Direct drive
   f. Include wall box, auto shutter, motor guard, and weather hood
   g. Fan-mounted disconnect switch
   h. Motor access from building interior
   i. UL 705 listed
   j. 1-year manufacturer’s warranty for defects in material and workmanship
B. The exhaust fan shall be Canarm LFI model AX16-1V, or equivalent.
C. Contractor shall provide and install air intake louvers which meet the following requirements:
   a. Max pressure drop 0.1 in. wg @ 2,500 CFM
   b. Manually actuated
   c. Hurricane rated
   d. 1-year manufacturer’s warranty for defects in material and workmanship
D. The air intake louver shall be Greenheck model EACA-601D, or equivalent.

PART 3 - EXECUTION

3.01. INSTALLATION

A. Install all ventilation equipment in accordance with the manufacturer’s instructions.

3.02. SUBMITTALS

A. Provide submittals in accordance with SECTION 01300.

3.03. OPERATION

A. The system will be considered acceptable after 30 days of normal operation. Provide personnel as required on site for the number of days as required to ensure this acceptance.

END OF SECTION

SECTION 16060

GROUNDING AND BONDING FOR ELECTRICAL SYSTEMS

PART - 1 GENERAL

1.01 RELATED DOCUMENTS

A. Drawings and general provisions of the Contract, including General and Supplementary Conditions and Division 01 Specification Sections, apply to this Section.

1.02 SUMMARY

A. Section includes grounding and bonding systems and equipment.

B. Section includes grounding and bonding systems and equipment, plus the following special applications:

1. Underground distribution grounding.
2. Ground bonding common with lightning protection system.
3. Foundation steel electrodes.

1.03 ACTION SUBMITTALS

A. Product Data: For each type of product indicated.

1.04 INFORMATIONAL SUBMITTALS

A. As-Built Data: Plans showing dimensioned as-built locations of grounding features specified in "Field Quality Control" Article, including the following:

1. Test wells.
2. Ground rods.
3. Ground rings.
4. Grounding arrangements and connections for separately derived systems.

B. Qualification Data: For testing agency and testing agency's field supervisor.

C. Field quality-control reports.

1.05 CLOSEOUT SUBMITTALS

A. Operation and Maintenance Data: For grounding to include in emergency, operation, and maintenance manuals.

1. In addition to items specified in Section 017823 "Operation and Maintenance Data," include the following:

a. Instructions for periodic testing and inspection of grounding features at test wells, ground rings and grounding connections for separately derived systems based on NETA MTS.

i. Tests shall determine if ground-resistance or impedance values remain within specified maximums, and instructions shall recommend corrective action if values do not.
ii. Include recommended testing intervals.

1.06 QUALITY ASSURANCE

A. Testing Agency Qualifications: Member company of NETA or an NRTL.

1. Testing Agency's Field Supervisor: Certified by NETA to supervise on-site testing.

B. Electrical Components, Devices, and Accessories: Listed and labeled as defined in NFPA 70, by a qualified testing agency, and marked for intended location and application.

C. Comply with UL 467 for grounding and bonding materials and equipment.

PART - 2 PRODUCTS

2.01 MANUFACTURERS

A. Burndy

B. Erico

C. OZ Gedney

D. or equal

2.02 SYSTEM DESCRIPTION

A. Electrical Components, Devices, and Accessories: Listed and labeled as defined in NFPA 70, by a qualified testing agency, and marked for intended location and application.

B. Comply with UL 467 for grounding and bonding materials and equipment.

2.03 CONDUCTORS

A. Insulated Conductors: Copper wire or cable insulated for 600 V unless otherwise required by applicable Code or authorities having jurisdiction.

B. Bare Copper Conductors:

1. Solid Conductors: ASTM B 3.
2. Stranded Conductors: ASTM B 8.
3. Tinned Conductors: ASTM B 33.
4. Bonding Cable: 28 kcmil, 14 strands of No. 17 AWG conductor, 1/4 inch (6 mm) in diameter.
5. Bonding Conductor: No. 4 or No. 6 AWG, stranded conductor.
6. Bonding Jumper: Copper tape, braided conductors terminated with copper ferrules; 1-5/8 inches (41 mm) wide and 1/16 inch (1.6 mm) thick.
7. Tinned Bonding Jumper: Tinned-copper tape, braided conductors terminated with copper ferrules; 1-5/8 inches (41 mm) wide and 1/16 inch (1.6 mm) thick.

2.04 CONNECTORS

A. Listed and labeled by an NRTL acceptable to authorities having jurisdiction for applications in which used and for specific types, sizes, and combinations of conductors and other items connected.

B. Bolted Connectors for Conductors and Pipes: Copper or copper alloy.

C. Welded Connectors: Exothermic-welding kits of types recommended by kit manufacturer for materials being joined and installation conditions.

D. Bus-Bar Connectors: Mechanical type, cast silicon bronze, solderless compression-type wire terminals, and long-barrel, two-bolt connection to ground bus bar.

2.05 GROUNDING ELECTRODES

A. Ground Rods: Copper-clad; 3/4 inch by 10 feet (19 mm by 3 m).

PART - 3 EXECUTION

3.01 APPLICATIONS

A. Conductors: Install solid conductor for No. 8 AWG and smaller, and stranded conductors for No. 6 AWG and larger unless otherwise indicated.

B. Underground Grounding Conductors: Install bare copper conductor, No. 2/0 AWG minimum.

1. Bury at least 24 inches (600 mm) below grade.
2. Duct-Bank Grounding Conductor: Bury 12 inches (300 mm) above duct bank when indicated as part of duct-bank installation.

C. Conductor Terminations and Connections:

1. Pipe and Equipment Grounding Conductor Terminations: Bolted connectors.
2. Underground Connections: Welded connectors except at test wells and as otherwise indicated.
3. Connections to Ground Rods at Test Wells: Bolted connectors.
4. Connections to Structural Steel: Welded connectors.

3.02 GROUNDING AT THE SERVICE

A. Equipment grounding conductors and grounding electrode conductors shall be connected to the ground bus. Install a main bonding jumper between the neutral and ground buses.

3.03 GROUNDING SEPARATELY DERIVED SYSTEMS

A. Generator: Install grounding electrode(s) at the generator location. The electrode shall be connected to the equipment grounding conductor and to the frame of the generator.

3.04 GROUNDING UNDERGROUND DISTRIBUTION SYSTEM COMPONENTS

A. Comply with IEEE C2 grounding requirements.

B. Pad-Mounted Transformers and Switches: Install two ground rods and ground ring around the pad. Ground pad-mounted equipment and noncurrent-carrying metal items associated with substations by connecting them to underground cable and grounding electrodes. Install tinned- copper conductor not less than No. 2 AWG for ground ring and for taps to equipment grounding terminals. Bury ground ring not less than 6 inches (150 mm) from the foundation.

3.05 EQUIPMENT GROUNDING

A. Install insulated equipment grounding conductors with all feeders and branch circuits.

B. Install insulated equipment grounding conductors with the following items, in addition to those required by NFPA 70:

1. Feeders and branch circuits.
2. Lighting circuits.
3. Receptacle circuits.
4. Single-phase motor and appliance branch circuits.
5. Three-phase motor and appliance branch circuits.
6. Flexible raceway runs.
7. Armored and metal-clad cable runs.
8. Busway Supply Circuits: Install insulated equipment grounding conductor from grounding bus in the switchgear, switchboard, or distribution panel to equipment grounding bar terminal on busway.

C. Metallic Fences: Comply with requirements of IEEE C2.

1. Grounding Conductor: Bare copper, not less than No. 8 AWG.
2. Gates: Shall be bonded to the grounding conductor with a flexible bonding jumper.
3. Barbed Wire: Strands shall be bonded to the grounding conductor.

3.06 INSTALLATION

A. Grounding Conductors: Route along shortest and straightest paths possible unless otherwise indicated or required by Code. Avoid obstructing access or placing conductors where they may be subjected to strain, impact, or damage.

B. Ground Bonding Common with Lightning Protection System: Comply with NFPA 780 and UL 96 when interconnecting with lightning protection system. Bond electrical power system ground directly to lightning protection system grounding conductor at closest point to electrical service grounding electrode. Use bonding conductor sized same as system grounding electrode conductor, and install in conduit.

C. Ground Rods: Drive rods until tops are 2 inches (50 mm) below finished floor or final grade unless otherwise indicated.

1. Interconnect ground rods with grounding electrode conductor below grade and as otherwise indicated. Make connections without exposing steel or damaging coating if any.
2. For grounding electrode system, install at least three rods spaced at least one-rod length from each other and located at least the same distance from other grounding electrodes, and connect to the service grounding electrode conductor.

D. Test Wells: Ground rod driven through drilled hole in bottom of handhole. Handholes are specified in Section 260543 "Underground Ducts and Raceways for Electrical Systems," and shall be at least 12 inches (300 mm) deep, with cover.

1. Test Wells: Install at least one test well for each service unless otherwise indicated. Install at the ground rod electrically closest to service entrance. Set top of test well flush with finished grade or floor.

E. Bonding Straps and Jumpers: Install in locations accessible for inspection and maintenance except where routed through short lengths of conduit.

1. Bonding to Structure: Bond straps directly to basic structure, taking care not to penetrate any adjacent parts.
2. Bonding to Equipment Mounted on Vibration Isolation Hangers and Supports: Install bonding so vibration is not transmitted to rigidly mounted equipment.

3. Use exothermic-welded connectors for outdoor locations; if a disconnect-type connection is required, use a bolted clamp.

F. Grounding for Steel Building Structure: Install a driven ground rod at base of each corner column and at intermediate exterior columns at distances not more than 60 feet (18 m) apart.

G. Ground Ring: Install a grounding conductor, electrically connected to each building structure ground rod and to each steel column, electrical equipment items, extending around the perimeter of area indicated.

1. Install tinned-copper conductor not less than No. 2/0 AWG for ground ring and for taps to building steel.
2. Bury ground ring not less than 24 inches (600 mm) from building's foundation.

H. Concrete-Encased Grounding Electrode (Ufer Ground): Fabricate according to NFPA 70; using electrically conductive coated steel reinforcing bars or rods, at least 20 feet (6.0 m) long. If reinforcing is in multiple pieces, connect together by the usual steel tie wires or exothermic welding to create the required length.

3.07 FIELD QUALITY CONTROL

A. Perform tests and inspections.

1. Manufacturer's Field Service: Engage a factory-authorized service representative to inspect components, assemblies, and equipment installations, including connections, and to assist in testing.

B. Tests and Inspections:

1. After installing grounding system but before permanent electrical circuits have been energized, test for compliance with requirements.
2. Inspect physical and mechanical condition. Verify tightness of accessible, bolted, electrical connections with a calibrated torque wrench according to manufacturer's written instructions.
3. Test completed grounding system at each location where a maximum ground-resistance level is specified, at service disconnect enclosure grounding terminal, at ground test wells, and at individual ground rods. Make tests at ground rods before any conductors are connected.

    a. Measure ground resistance no fewer than two full days after last trace of precipitation and without soil being moistened by any means other than natural drainage or seepage and without chemical treatment or other artificial means of reducing natural ground resistance.
    b. Perform tests by fall-of-potential method according to IEEE 81.

4. Prepare dimensioned Drawings locating each test well, ground rod and ground-rod assembly, and other grounding electrodes. Identify each by letter in alphabetical order, and key to the record of tests and observations. Include the number of rods driven and their depth at each location, and include observations of weather and other phenomena that may affect test results. Describe measures taken to improve test results.

C. Grounding system will be considered defective if it does not pass tests and inspections.

D. Prepare test and inspection reports.

E. Report measured ground resistances that exceed the following values:

1. Power and Lighting Equipment or System with Capacity of 500 kVA and Less: 10 ohms.

F. Excessive Ground Resistance: If resistance to ground exceeds specified values, notify Architect promptly and include recommendations to reduce ground resistance.

END OF SECTION

SECTION 16120

LOW-VOLTAGE ELECTRICAL POWER CONDUCTORS AND CABLES

PART - 1 GENERAL

1.01 RELATED DOCUMENTS

A. Drawings and general provisions of the Contract, including General and Supplementary Conditions and Division 01 Specification Sections, apply to this Section.

1.02 SUMMARY

A. Section Includes:

1. Building wires and cables rated 600 V and less.
2. Connectors, splices, and terminations rated 600 V and less.

1.03 DEFINITIONS

A. VFC: Variable frequency controller.

1.04 ACTION SUBMITTALS

A. Product Data: For each type of product.

1.05 INFORMATIONAL SUBMITTALS

A. Qualification Data: For testing agency.

B. Field quality-control reports.

1.06 QUALITY ASSURANCE

A. Testing Agency Qualifications: Member company of NETA or an NRTL.

1. Testing Agency's Field Supervisor: Certified by NETA to supervise on-site testing.

PART - 2 PRODUCTS

2.01 CONDUCTORS AND CABLES

A. Copper Conductors: Comply with NEMA WC 70/ICEA S-95-658.

B. Conductor Insulation: Comply with NEMA WC 70/ICEA S-95-658 for Type THHN/THWN-2.

C. Multiconductor Cable: Comply with NEMA WC 70/ICEA S-95-658 for nonmetallic-sheathed cable, submersible with ground wire.

2.02 CONNECTORS AND SPLICES

A. Description: Factory-fabricated connectors and splices of size, ampacity rating, material, type, and class for application and service indicated.

2.03 SYSTEM DESCRIPTION

A. Electrical Components, Devices, and Accessories: Listed and labeled as defined in NFPA 70, by a qualified testing agency, and marked for intended location and application.

B. Comply with NFPA 70.

PART - 3 EXECUTION

3.01 CONDUCTOR MATERIAL APPLICATIONS

A. Feeders: Coppercopper for feeders No. 4 AWG and larger. Solid for No. 10 AWG and smaller; stranded for No. 8 AWG and larger.

B. Branch Circuits: Copper. Solid for No. 12 AWG and smaller; stranded for No. 10 AWG and larger, except VFC cable, which shall be extra flexible stranded.

3.02 CONDUCTOR INSULATION AND MULTICONDUCTOR CABLE APPLICATIONS AND WIRING METHODS

A. Submersible multi conductor cable for lift pumps.

3.03 INSTALLATION OF CONDUCTORS AND CABLES

A. Conceal cables in finished walls, ceilings, and floors unless otherwise indicated.

B. Complete raceway installation between conductor and cable termination points according to Section 260533 "Raceways and Boxes for Electrical Systems" prior to pulling conductors and cables.

C. Use manufacturer-approved pulling compound or lubricant where necessary; compound used must not deteriorate conductor or insulation. Do not exceed manufacturer's recommended maximum pulling tensions and sidewall pressure values.

D. Use pulling means, including fish tape, cable, rope, and basket-weave wire/cable grips, that will not damage cables or raceway.

E. Install exposed cables parallel and perpendicular to surfaces of exposed structural members, and follow surface contours where possible.

3.04 CONNECTIONS

A. Tighten electrical connectors and terminals according to manufacturer's published torque-tightening values. If manufacturer's torque values are not indicated, use those specified in UL 486A-486B.

B. Make splices, terminations, and taps that are compatible with conductor material and that possess equivalent or better mechanical strength and insulation ratings than unspliced conductors.

1. Use oxide inhibitor in each splice, termination, and tap for aluminum conductors.

C. Wiring at Outlets: Install conductor at each outlet, with at least 6 inches (150 mm) of slack.

3.05 IDENTIFICATION

A. Identify and color-code conductors and cables according to Section 260553 "Identification for Electrical Systems.

B. Identify each spare conductor at each end with identity number and location of other end of conductor, and identify as spare conductor.

3.06 FIELD QUALITY CONTROL

A. Perform the following tests and inspections

1. After installing conductors and cables and before electrical circuitry has been energized, test service entrance and feeder conductors for compliance with requirements.
2. Perform each visual and mechanical inspection and electrical test stated in NETA Acceptance Testing Specification. Certify compliance with test parameters.
3. Infrared Scanning: After Substantial Completion, but not more than 60 days after Final Acceptance, perform an infrared scan of each splice in conductors No. 3 AWG and larger. Remove box and equipment covers so splices are accessible to portable scanner. Correct deficiencies determined during the scan.

    a. Follow-up Infrared Scanning: Perform an additional follow-up infrared scan of each splice 11 months after date of Substantial Completion.
    b. Instrument: Use an infrared scanning device designed to measure temperature or to detect significant deviations from normal values. Provide calibration record for device.
    c. Record of Infrared Scanning: Prepare a certified report that identifies splices checked and that describes scanning results. Include notation of deficiencies detected, remedial action taken, and observations after remedial action.

B. Test and Inspection Reports: Prepare a written report to record the following:

1. Procedures used.
2. Results that comply with requirements.
3. Results that do not comply with requirements and corrective action taken to achieve compliance with requirements.

C. Cables will be considered defective if they do not pass tests and inspections.

END OF SECTION

SECTION 16130

RACEWAYS AND BOXES FOR ELECTRICAL SYSTEMS

PART - 1 GENERAL

1.01 RELATED DOCUMENTS

A. Drawings and general provisions of the Contract, including General and Supplementary Conditions and Division 01 Specification Sections, apply to this Section.

1.02 SUMMARY

A. Section Includes:

1. Metal conduits, tubing, and fittings.
2. Nonmetal conduits, tubing, and fittings.
3. Surface raceways.
4. Boxes, enclosures, and cabinets.

1.03 DEFINITIONS

A. ARC: Aluminum rigid conduit.

B. GRC: Galvanized rigid steel conduit.

C. IMC: Intermediate metal conduit.

1.04 ACTION SUBMITTALS

A. Product Data: For surface raceways, wireways and fittings, floor boxes, hinged-cover enclosures, and cabinets.

B. Shop Drawings: For custom enclosures and cabinets. Include plans, elevations, sections, and attachment details.

1.05 INFORMATIONAL SUBMITTALS

A. Coordination Drawings: Conduit routing plans, drawn to scale, on which the following items are shown and coordinated with each other, using input from installers of items involved:

1. Structural members in paths of conduit groups with common supports.
2. HVAC and plumbing items and architectural features in paths of conduit groups with common supports.

B. Qualification Data: For professional engineer.

C. Source quality-control reports.

PART - 2 PRODUCTS

2.01 METAL CONDUITS, TUBING, AND FITTINGS

A. Listing and Labeling: Metal conduits, tubing, and fittings shall be listed and labeled as defined in NFPA 70, by a qualified testing agency, and marked for intended location and application.

B. GRC: Comply with ANSI C80.1 and UL 6.

C. ARC: Comply with ANSI C80.5 and UL 6A.

D. IMC: Comply with ANSI C80.6 and UL 1242.

E. EMT: Comply with ANSI C80.3 and UL 797.

F. LFMC: Flexible steel conduit with PVC jacket and complying with UL 360.

G. Fittings for Metal Conduit: Comply with NEMA FB 1 and UL 514B.

1. Expansion Fittings: PVC or steel to match conduit type, complying with UL 651, rated for environmental conditions where installed, and including flexible external bonding jumper.

H. Joint Compound for IMC, GRC, or ARC: Approved, as defined in NFPA 70, by authorities having jurisdiction for use in conduit assemblies, and compounded for use to lubricate and protect threaded conduit joints from corrosion and to enhance their conductivity.

2.02 NONMETALLIC CONDUITS, TUBING, AND FITTINGS

A. Listing and Labeling: Nonmetallic conduits, tubing, and fittings shall be listed and labeled as defined in NFPA 70, by a qualified testing agency, and marked for intended location and application.

B. ENT: Comply with NEMA TC 13 and UL 1653.

C. RNC: Type EPC-40-PVC, complying with NEMA TC 2 and UL 651 unless otherwise indicated.

D. LFNC: Comply with UL 1660.

E. Fittings for ENT and RNC: Comply with NEMA TC 3; match to conduit or tubing type and material.

F. Fittings for LFNC: Comply with UL 514B.

G. Solvent cements and adhesive primers shall have a VOC content of 510 and 550 g/L or less, respectively, when calculated according to 40 CFR 59, Subpart D (EPA Method 24).

H. Solvent cements and adhesive primers shall comply with the testing and product requirements of the California Department of Health Services' "Standard Practice for the Testing of Volatile Organic Emissions from Various Sources Using Small-Scale Environmental Chambers."

2.03 BOXES, ENCLOSURES, AND CABINETS

A. General Requirements for Boxes, Enclosures, and Cabinets: Boxes, enclosures, and cabinets installed in wet locations shall be listed for use in wet locations.

B. Sheet Metal Outlet and Device Boxes: Comply with NEMA OS 1 and UL 514A.

C. Cast-Metal Outlet and Device Boxes: Comply with NEMA FB 1, aluminum, Type FD, with gasketed cover.

D. Cast-Metal Access, Pull, and Junction Boxes: Comply with NEMA FB 1 and UL 1773, cast aluminum with gasketed cover.

E. Hinged-Cover Enclosures: Comply with UL 50 and NEMA 250, Type 3R with continuous-hinge cover with flush latch unless otherwise indicated.

1. Metal Enclosures: Steel, finished inside and out with manufacturer's standard enamel.
2. Interior Panels: Steel; all sides finished with manufacturer's standard enamel.

F. Cabinets:

1. NEMA 250, Type 3R galvanized-steel box with removable interior panel and removable front, finished inside and out with manufacturer's standard enamel.
2. Hinged door in front cover with flush latch and concealed hinge.
3. Key latch to match panelboards.
4. Metal barriers to separate wiring of different systems and voltage.
5. Accessory feet where required for freestanding equipment.
6. Nonmetallic cabinets shall be listed and labeled as defined in NFPA 70, by a qualified testing agency, and marked for intended location and application.

PART - 3 EXECUTION

3.01 RACEWAY APPLICATION

A. Outdoors: Apply raceway products as specified below unless otherwise indicated:

1. Exposed Conduit: GRC.
2. Underground Conduit: RNC, Type EPC-40-PVC,concrete encased.
3. Connection to Vibrating Equipment (Including Transformers and Hydraulic, Pneumatic, Electric Solenoid, or Motor-Driven Equipment): LFMC.
4. Boxes and Enclosures, Aboveground: NEMA 250, Type 3R.

B. Indoors: Apply raceway products as specified below unless otherwise indicated:

1. Exposed, Not Subject to Physical Damage: GRC.
2. Exposed and Subject to Severe Physical Damage: GRC.
3. Connection to Vibrating Equipment (Including Transformers and Hydraulic, Pneumatic, Electric Solenoid, or Motor-Driven Equipment): FMC, except use LFMC in damp or wet locations.
4. Damp or Wet Locations: GRC.
5. Boxes and Enclosures: NEMA 250, Type 3R..

C. Minimum Raceway Size: 3/4-inch (21-mm) trade size.

D. Raceway Fittings: Compatible with raceways and suitable for use and location.

1. Rigid and Intermediate Steel Conduit: Use threaded rigid steel conduit fittings unless otherwise indicated. Comply with NEMA FB 2.10.
2. Flexible Conduit: Use only fittings listed for use with flexible conduit. Comply with NEMA FB 2.20.

E. Install surface raceways only where indicated on Drawings.

3.02 INSTALLATION

A. Comply with NECA 1 and NECA 101 for installation requirements except where requirements on Drawings or in this article are stricter. Comply with NECA 102 for aluminum conduits. Comply with NFPA 70 limitations for types of raceways allowed in specific occupancies and number of floors.

B. Keep raceways at least 6 inches (150 mm) away from parallel runs of flues and steam or hot-water pipes. Install horizontal raceway runs above water and steam piping.

C. Complete raceway installation before starting conductor installation.

D. Arrange stub-ups so curved portions of bends are not visible above finished slab.

E. Install no more than the equivalent of three 90-degree bends in any conduit run except for control wiring conduits, for which fewer bends are allowed. Support within 12 inches (300 mm) of changes in direction.

F. Support conduit within 12 inches (300 mm)of enclosures to which attached.

G. Raceways Embedded in Slabs:

1. Run conduit larger than 1-inch (27-mm) trade size, parallel or at right angles to main reinforcement. Where at right angles to reinforcement, place conduit close to slab support. Secure raceways to reinforcement at maximum 10-foot (3-m)intervals.
2. Arrange raceways to cross building expansion joints at right angles with expansion fittings.
3. Arrange raceways to keep a minimum of 2 inches (50 mm) of concrete cover in all directions.
4. Do not embed threadless fittings in concrete unless specifically approved by Architect for each specific location.
5. Change from ENT to GRC before rising above floor.

H. Threaded Conduit Joints, Exposed to Wet, Damp, Corrosive, or Outdoor Conditions: Apply listed compound to threads of raceway and fittings before making up joints. Follow compound manufacturer's written instructions.

I. Raceway Terminations at Locations Subject to Moisture or Vibration: Use insulating bushings to protect conductors including conductors smaller than No. 4 AWG.

J. Terminate threaded conduits into threaded hubs or with locknuts on inside and outside of boxes or cabinets. Install bushings on conduits up to 1-1/4-inch (35mm) trade size and insulated throat metal bushings on 1-1/2-inch (41-mm) trade size and larger conduits terminated with locknuts. Install insulated throat metal grounding bushings on service conduits.

K. Install raceways square to the enclosure and terminate at enclosures with locknuts. Install locknuts hand tight plus 1/4 turn more.

L. Do not rely on locknuts to penetrate nonconductive coatings on enclosures. Remove coatings in the locknut area prior to assembling conduit to enclosure to assure a continuous ground path.

M. Cut conduit perpendicular to the length. For conduits 2-inch (53-mm) trade size and larger, use roll cutter or a guide to make cut straight and perpendicular to the length.

N. Install pull wires in empty raceways. Use polypropylene or monofilament plastic line with not less than 200-lb (90-kg) tensile strength. Leave at least 12 inches (300 mm) of slack at each end of pull wire. Cap underground raceways designated as spare above grade alongside raceways in use.

O. Install raceway sealing fittings at accessible locations according to NFPA 70 and fill them with listed sealing compound. For concealed raceways, install each fitting in a flush steel box with a blank cover plate having a finish similar to that of adjacent plates or surfaces. Install raceway sealing fittings according to NFPA 70.

P. Flexible Conduit Connections: Comply with NEMA RV 3. Use a maximum of 72 inches (1830 mm) of flexible conduit for equipment subject to vibration, noise transmission, or movement; and for transformers and motors.

1. Use LFMC in damp or wet locations subject to severe physical damage.

Q. Locate boxes so that cover or plate will not span different building finishes.

R. Fasten junction and pull boxes to or support from building structure. Do not support boxes by conduits.

3.03 INSTALLATION OF UNDERGROUND CONDUIT

A. Underground Conduit shall be PVC Schedule 40 encased in concrete.

3.04 PROTECTION

A. Protect coatings, finishes, and cabinets from damage and deterioration.

1. Repair damage to galvanized finishes with zinc-rich paint recommended by manufacturer.
2. Repair damage to PVC coatings or paint finishes with matching touchup coating recommended by manufacturer.

END OF SECTION

SECTION 16230

ENGINE GENERATORS

PART - 1 GENERAL

1.01 RELATED DOCUMENTS

A. Drawings and general provisions of the Contract, including General and Supplementary Conditions and Division 01 Specification Sections, apply to this Section.

1.02 SUMMARY

A. Section includes packaged engine-generator sets for standby power supply with the following features:

1. Diesel engine.
2. Unit-mounted cooling system.
3. Unit-mounted control and monitoring.
4. Performance requirements for sensitive loads.
5. Fuel system.
6. Parallel generator sets.
7. Load banks.
8. Outdoor enclosure.

1.03 DEFINITIONS

A. Operational Bandwidth: The total variation from the lowest to highest value of a parameter over the range of conditions indicated, expressed as a percentage of the nominal value of the parameter.

B. LP: Liquid petroleum.

C. EPS: Emergency power supply.

D. EPSS: Emergency power supply system.

1.04 ACTION SUBMITTALS

A. Product Data: For each type of product.

1. Include rated capacities, operating characteristics, electrical characteristics, and furnished specialties and accessories.
2. Include thermal damage curve for generator.
3. Include time-current characteristic curves for generator protective device.
4. Include fuel consumption in gallons per hour at 0.8 power factor at 0.5, 0.75 and 1.0 times generator capacity.
5. Include generator efficiency at 0.8 power factor at 0.5, 0.75 and 1.0 times generator capacity.
6. Include air flow requirements for cooling and combustion air in cfm at 0.8 power factor, with air supply temperature of 95, 80, 70, and 50 deg F. Provide drawings showing requirements and limitations for location of air intake and exhausts.
7. Include generator characteristics, including, but not limited to kw rating, efficiency, reactances, and short-circuit current capability.

B. Shop Drawings:

1. Include plans and elevations for engine-generator set and other components specified. Indicate access requirements affected by height of subbase fuel tank.
2. Include details of equipment assemblies. Indicate dimensions, weights, loads, required clearances, method of field assembly, components, and location and size of each field connection.
3. Identify fluid drain ports and clearance requirements for proper fluid drain.
4. Design calculations for selecting vibration isolators and seismic restraints and for designing vibration isolation bases.
5. Vibration Isolation Base Details: Detail fabrication including anchorages and attachments to structure and to supported equipment. Include base weights.
6. Include diagrams for power, signal, and control wiring. Complete schematic, wiring, and interconnection diagrams showing terminal markings for EPS equipment and functional relationship between all electrical components.

1.05 INFORMATIONAL SUBMITTALS

A. Qualification Data: For Installer, manufacturer and testing agency.

B. Seismic Qualification Certificates: For engine-generator set, accessories, and components, from manufacturer.

1. Basis for Certification: Indicate whether withstand certification is based on actual test of assembled components or on calculation.
2. Dimensioned Outline Drawings of Equipment Unit: With engine and generator mounted on rails identify center of gravity and total weight, supplied enclosure, subbase-mounted fuel tank and each piece of equipment not integral to the engine-generator set, and locate and describe mounting and anchorage provisions.
3. Detailed description of equipment anchorage devices on which the certification is based and their installation requirements.

C. Source quality-control reports, including, but not limited to the following:

1. Certified summary of prototype-unit test report.
2. Certified Test Reports: For components and accessories that are equivalent, but not identical, to those tested on prototype unit.
3. Certified Summary of Performance Tests: Certify compliance with specified requirement to meet performance criteria for sensitive loads.
4. Report of factory test on units to be shipped for this Project, showing evidence of compliance with specified requirements.
5. Report of sound generation.
6. Report of exhaust emissions showing compliance with applicable regulations.
7. Certified Torsional Vibration Compatibility: Comply with NFPA 110.

D. Field quality-control reports.

E. Warranty: For special warranty.

1.06 CLOSEOUT SUBMITTALS

A. Operation and Maintenance Data: For packaged engine generators to include in emergency, operation, and maintenance manuals.

1. In addition to items specified in Section 017823 "Operation and Maintenance Data," include the following:

a. List of tools and replacement items recommended to be stored at Project for ready access. Include part and drawing numbers, current unit prices, and source of supply.

b. Operating instructions laminated and mounted adjacent to generator location.
c. Training plan.

1.07 MAINTENANCE MATERIAL SUBMITTALS

A. Furnish extra materials that match products installed and that are packaged with protective covering for storage and identified with labels describing contents.

1. Fuses: One for every 10 of each type and rating but no fewer than one of each.
2. Indicator Lamps: Two for every six of each type used, but no fewer than two of each.
3. Filters: One set each of lubricating oil, fuel, and combustion-air filters.
4. Tools: Each tool listed by part number in operations and maintenance manual.

1.08 QUALITY ASSURANCE

A. Installer Qualifications: Manufacturer's authorized representative who is trained and approved by manufacturer.

B. Testing Agency Qualifications: Member company of NETA or an NRTL.

1. Testing Agency's Field Supervisor: Certified by NETA to supervise on-site testing.

1.09 WARRANTY

A. Manufacturer's Warranty: Manufacturer agrees to repair or replace components of packaged engine generators and associated auxiliary components that fail in materials or workmanship within specified warranty period.

1. Warranty Period5 years from date of Substantial Completion.

PART - 2 PRODUCTS

2.01 MANUFACTURERS

A. Cummins

B. Caterpillar

C. Kohler

D. Mitsubishi

E. Source Limitations: Obtain packaged generator sets and auxiliary components through one source from a single manufacturer.

2.02 PERFORMANCE REQUIREMENTS

A. ASME Compliance: Comply with ASME B15.1.

B. NFPA Compliance:

1. Comply with NFPA 37.
2. Comply with NFPA 70.
3. Comply with NFPA 99.
4. Comply with NFPA 110 requirements for Level 2 emergency power supply system.

C. UL Compliance: Comply with UL 2200.

D. Engine Exhaust Emissions: Comply with EPA Tier 3 requirements and applicable state and local government requirements.

E. Noise Emission: Comply with applicable state and local government requirements for maximum noise level at adjacent property boundaries due to sound emitted by generator set including engine, engine exhaust, engine cooling-air intake and discharge, and other components of installation.

F. Environmental Conditions: Engine-generator system shall withstand the following environmental conditions without mechanical or electrical damage or degradation of performance capability:

1. Ambient Temperature: 5 to 40 deg C.
2. Relative Humidity: Zero to 95 percent.
3. Altitude: Sea level to 1000 feet (300 m).

2.03 ASSEMBLY DESCRIPTION

A. Factory-assembled and -tested, water-cooled engine, with brushless generator and accessories.

B. Electrical Components, Devices, and Accessories: Listed and labeled as defined in NFPA 70, by a testing agency acceptable to authorities having jurisdiction, and marked for intended location and application.

C. EPSS Class: Engine-generator set shall be classified as a Class 96 in accordance with NFPA 110.

D. Induction Method: Naturally aspirated.

E. Governor: Adjustable isochronous, with speed sensing.

F. Emissions: Comply with EPA Tier 4 requirements.

G. Mounting Frame: Structural steel framework to maintain alignment of mounted components without depending on concrete foundation. Provide lifting attachments sized and spaced to prevent deflection of base during lifting and moving.

1. Rigging Diagram: Inscribed on metal plate permanently attached to mounting frame to indicate location and lifting capacity of each lifting attachment and generator-set center of gravity.

H. Capacities and Characteristics:

1. Power Output Ratings: Nominal ratings as indicated at 0.8 power factor excluding power required for the continued and repeated operation of the unit and auxiliaries, with capacity as required to operate as a unit as evidenced by records of prototype testing.
2. Output Connections: Three-phase, four wire.
3. Nameplates: For each major system component to identify manufacturer's name and address, and model and serial number of component.

I. Generator-Set Performance:

1. Steady-State Voltage Operational Bandwidth: 3 percent of rated output voltage from no load to full load.

2. Transient Voltage Performance: Not more than 20 percent variation for 50 percent step-load increase or decrease. Voltage shall recover and remain within the steady-state operating band within three seconds.
3. Steady-State Frequency Operational Bandwidth: 0.5 percent of rated frequency from no load to full load.
4. Steady-State Frequency Stability: When system is operating at any constant load within the rated load, there shall be no random speed variations outside the steady-state operational band and no hunting or surging of speed.
5. Transient Frequency Performance: Less than 5 percent variation for 50 percent step-load increase or decrease. Frequency shall recover and remain within the steady-state operating band within five seconds.
6. Output Waveform: At no load, harmonic content measured line to line or line to neutral shall not exceed 5 percent total and 3 percent for single harmonics. Telephone influence factor, determined according to NEMA MG 1, shall not exceed 50 percent.
7. Sustained Short-Circuit Current: For a three-phase, bolted short circuit at system output terminals, system shall supply a minimum of 250 percent of rated full-load current for not less than 10 seconds and then clear the fault automatically, without damage to generator system components.
8. Start Time: Comply with NFPA 110, Type 10, system requirements.

J. Generator-Set Performance for Sensitive Loads:

1. Oversizing generator compared with the rated power output of the engine is permissible to meet specified performance.

    a. Nameplate Data for Oversized Generator: Show ratings required by the Contract Documents rather than ratings that would normally be applied to generator size installed.

2. Steady-State Voltage Operational Bandwidth: 1 percent of rated output voltage from no load to full load.
3. Transient Voltage Performance: Not more than 10 percent variation for 50 percent step-load increase or decrease. Voltage shall recover and remain within the steady-state operating band within 0.5 second.
4. Steady-State Frequency Operational Bandwidth: Plus or minus 0.25 percent of rated frequency from no load to full load.
5. Steady-State Frequency Stability: When system is operating at any constant load within the rated load, there shall be no random speed variations outside the steady-state operational band and no hunting or surging of speed.
6. Transient Frequency Performance: Less than 2-Hz variation for 50 percent step-load increase or decrease. Frequency shall recover and remain within the steady-state operating band within three seconds.
7. Output Waveform: At no load, harmonic content measured line to neutral shall not exceed 2 percent total with no slot ripple. Telephone influence factor, determined according to NEMA MG 1, shall not exceed 50 percent.
8. Sustained Short-Circuit Current: For a three-phase, bolted short circuit at system output terminals, system shall supply a minimum of 300 percent of rated full-load current for not less than 10 seconds and then clear the fault automatically, without damage to winding insulation or other generator system components.
9. Excitation System: Performance shall be unaffected by voltage distortion caused by nonlinear load.

    a. Provide permanent magnet excitation for power source to voltage regulator.

10. Start Time: Comply with NFPA 110, Type 10, system requirements.

2.04 ENGINE

A. Fuel: Fuel oil, Grade DF-2.

B. Rated Engine Speed: 1800 rpm.

C. Maximum Piston Speed for Four-Cycle Engines: 2250 fpm (11.4 m/s).

D. Lubrication System: The following items are mounted on engine or skid:

1. Filter and Strainer: Rated to remove 90 percent of particles 5 micrometers and smaller while passing full flow.
2. Thermostatic Control Valve: Control flow in system to maintain optimum oil temperature. Unit shall be capable of full flow and is designed to be fail-safe.
3. Crankcase Drain: Arranged for complete gravity drainage to an easily removable container with no disassembly and without use of pumps, siphons, special tools, or appliances.

E. Jacket Coolant Heater: Electric-immersion type, factory installed in coolant jacket system. Comply with NFPA 110 requirements for Level 1 equipment for heater capacity.

F. Cooling System: Closed loop, liquid cooled, with radiator factory mounted on engine-generator- set mounting frame and integral engine-driven coolant pump.

1. Coolant: Solution of 50 percent ethylene-glycol-based antifreeze and 50 percent water, with anticorrosion additives as recommended by engine manufacturer.
2. Size of Radiator: Adequate to contain expansion of total system coolant from cold start to 110 percent load condition.
3. Expansion Tank: Constructed of welded steel plate and rated to withstand maximum closed-loop coolant system pressure for engine used. Equip with gage glass and petcock.
4. Temperature Control: Self-contained, thermostatic-control valve modulates coolant flow automatically to maintain optimum constant coolant temperature as recommended by engine manufacturer.
5. Coolant Hose: Flexible assembly with inside surface of nonporous rubber and outer covering of aging-, ultraviolet-, and abrasion-resistant fabric.

    a. Rating: 50-psig (345-kPa) maximum working pressure with coolant at 180 deg F (82 deg C), and non-collapsible under vacuum.
    b. End Fittings: Flanges or steel pipe nipples with clamps to suit piping and equipment connections.

G. Cooling System: Closed loop, liquid cooled, with remote radiator and integral engine-driven coolant pump. Comply with requirements in Section 232113 "Hydronic Piping" for coolant piping.

1. Configuration: Horizontal air discharge.
2. Radiator Core Tubes: manufacturer’s standard.
3. Size of Radiator: Adequate to contain expansion of total system coolant from cold start to 110 percent load condition.
4. Expansion Tank: Constructed of welded steel plate and rated to withstand maximum closed-loop coolant system pressure for engine used. Equip with gage glass and petcock.
5. Fan: Driven by multiple belts from engine shaft.
6. Coolant: Solution of 50 percent ethylene-glycol-based antifreeze and 50 percent water, with anticorrosion additives as recommended by engine manufacturer.
7. Temperature Control: Self-contained, thermostatic-control valve modulates coolant flow automatically to maintain optimum constant coolant temperature as recommended by engine manufacturer.

H. Muffler/Silencer: Commercial type, sized as recommended by engine manufacturer and selected with exhaust piping system to not exceed engine manufacturer's engine backpressure requirements.

1. Minimum sound attenuation of 12 dB at 500 Hz.
2. Sound level measured at a distance of 25 feet (8 m) from exhaust discharge after installation is complete shall be 90 dBA or less.

I. Air-Intake Filter: Heavy-duty, engine-mounted air cleaner with replaceable dry-filter element and "blocked filter" indicator.

J. Starting System: 24-V electric, with negative ground.

1. Components: Sized so they are not damaged during a full engine-cranking cycle with ambient temperature at maximum specified in "Performance Requirements" Article.
2. Cranking Motor: Heavy-duty unit that automatically engages and releases from engine flywheel without binding.
3. Cranking Cycle: As required by NFPA 110 for system level specified.
4. Battery: Lead acid, with capacity within ambient temperature range specified in "Performance Requirements" Article to provide specified cranking cycle at least three times without recharging.
5. Battery Cable: Size as recommended by engine manufacturer for cable length indicated. Include required interconnecting conductors and connection accessories.
6. Battery Compartment: Factory fabricated of metal with acid-resistant finish and thermal insulation. Thermostatically controlled heater shall be arranged to maintain battery above 10 deg C regardless of external ambient temperature within range specified in "Performance Requirements" Article. Include accessories required to support and fasten batteries in place. Provide ventilation to exhaust battery gases.
7. Battery Stand: Factory-fabricated, two-tier metal with acid-resistant finish designed to hold the quantity of battery cells required and to maintain the arrangement to minimize lengths of battery interconnections.
8. Battery-Charging Alternator: Factory mounted on engine with solid-state voltage regulation and 35 A minimum continuous rating.
9. Battery Charger: Current-limiting, automatic-equalizing and float-charging type designed for lead-acid batteries. Unit shall comply with UL 1236 and include the following features:

    a. Operation: Equalizing-charging rate of 10 A shall be initiated automatically after battery has lost charge until an adjustable equalizing voltage is achieved at battery terminals. Unit shall then be automatically switched to a lower float-charging mode and shall continue to operate in that mode until battery is discharged again.
    b. Automatic Temperature Compensation: Adjust float and equalize voltages for variations in ambient temperature from minus 40 deg F (minus 40 deg C) to 140 deg F (plus 60 deg C) to prevent overcharging at high temperatures and undercharging at low temperatures.
    c. Automatic Voltage Regulation: Maintain constant output voltage regardless of input voltage variations up to plus or minus 10 percent.
    d. Ammeter and Voltmeter: Flush mounted in door. Meters shall indicate charging rates.
    e. Safety Functions: Sense abnormally low battery voltage and close contacts providing low battery voltage indication on control and monitoring panel. Sense high battery voltage and loss of ac input or dc output of battery charger. Either condition shall close contacts that provide a battery-charger malfunction indication at system control and monitoring panel.
    f. Enclosure and Mounting: NEMA 250, Type 1, wall-mounted cabinet.

K. Subbase-Mounted, Double-Wall, Fuel-Oil Tank: Factory installed and piped, complying with UL 142 fuel-oil tank. Features include the following:

1. Tank level indicator.
2. Fuel-Tank Capacity: Minimum 133 percent of total fuel required for periodic maintenance operations between fuel refills, plus fuel for the hours of continuous operation for indicated EPSS class.
3. Leak detection in interstitial space.
4. Vandal-resistant fill cap.
5. Containment Provisions: Comply with requirements of authorities having jurisdiction.

2.05 CONTROL AND MONITORING

A. Manual Starting System Sequence of Operation: Switching on-off switch on the generator control panel to the on position starts generator set. The off position of same switch initiates generator-set shutdown. When generator set is running, specified system or equipment failures or derangements automatically shut down generator set and initiate alarms.

B. Provide minimum run time control set for 30 minutes with override only by operation of a remote emergency-stop switch.

C. Comply with UL 508A.

D. Configuration: Operating and safety indications, protective devices, basic system controls, and engine gages shall be grouped in a common control and monitoring panel mounted on the generator set. Mounting method shall isolate the control panel from generator-set vibration. Panel shall be powered from the engine-generator set battery.

E. Indicating Devices: As required by NFPA 110 for Level 2 system, including the following:

1. AC voltmeter.
2. AC ammeter.
3. AC frequency meter.
4. EPS supplying load indicator.
5. Ammeter and voltmeter phase-selector switches.
6. DC voltmeter (alternator battery charging).
7. Engine-coolant temperature gage.
8. Engine lubricating-oil pressure gage.
9. Running-time meter.
10. Current and Potential Transformers: Instrument accuracy class.

F. Protective Devices and Controls in Local Control Panel: Shutdown devices and common visual alarm indication as required by NFPA 110 for Level 2 system, including the following:

1. Start-stop switch.
2. Overcrank shutdown device.
3. Overspeed shutdown device.
4. Coolant high-temperature shutdown device.
5. Coolant low-level shutdown device.
6. Low lube oil pressure shutdown device.
7. Air shutdown damper shutdown device when used.
8. Overcrank alarm.
9. Overspeed alarm.
10. Coolant high-temperature alarm.
11. Coolant low-temperature alarm.
12. Coolant low-level alarm.
13. Low lube oil pressure alarm.
14. Air shutdown damper alarm when used.
15. Lamp test.
16. Contacts for local and remote common alarm.

17. Coolant high-temperature prealarm.
18. Generator-voltage adjusting rheostat.
19. Main fuel tank low-level alarm.

    a. Low fuel level alarm shall be initiated when the level falls below that required for operation for the duration required in "Fuel Tank Capacity" Paragraph in "Diesel Fuel-Oil System" Article.

20. Run-Off-Auto switch.
21. Control switch not in automatic position alarm.
22. Low-starting air pressure alarm.
23. Low-starting hydraulic pressure alarm.
24. Low cranking voltage alarm.
25. Battery-charger malfunction alarm.
26. Battery low-voltage alarm.
27. Battery high-voltage alarm.
28. Generator overcurrent protective device not closed alarm.

G. Supporting Items: Include sensors, transducers, terminals, relays, and other devices and include wiring required to support specified items. Locate sensors and other supporting items on engine or generator, unless otherwise indicated.

H. Common Remote Panel with Common Audible Alarm: Comply with NFPA 110 requirements for Level 2 systems. Include necessary contacts and terminals in control and monitoring panel. Remote panel shall be powered from the engine-generator set battery.

I. Remote Alarm Annunciator: Comply with NFPA 99. An LED labeled with proper alarm conditions shall identify each alarm event, and a common audible signal shall sound for each alarm condition. Silencing switch in face of panel shall silence signal without altering visual indication. Connect so that after an alarm is silenced, clearing of initiating condition will reactivate alarm until silencing switch is reset. Cabinet and faceplate are surface- or flush- mounting type to suit mounting conditions indicated.

1. Overcrank alarm.
2. Coolant low-temperature alarm.
3. High engine temperature prealarm.
4. High engine temperature alarm.
5. Low lube oil pressure alarm.
6. Overspeed alarm.
7. Low fuel main tank alarm.
8. Low coolant level alarm.
9. Low cranking voltage alarm.
10. Contacts for local and remote common alarm.
11. Audible-alarm silencing switch.
12. Air shutdown damper when used.
13. Run-Off-Auto switch.
14. Control switch not in automatic position alarm.
15. Fuel tank derangement alarm.
16. Fuel tank high-level shutdown of fuel supply alarm.
17. Lamp test.
18. Low cranking voltage alarm.
19. Generator overcurrent protective device not closed.

J. Supporting Items: Include sensors, transducers, terminals, relays, and other devices and include wiring required to support specified items. Locate sensors and other supporting items on engine or generator, unless otherwise indicated.

K. Remote Emergency-Stop Switch: Flush; wall mounted, unless otherwise indicated; and labeled. Push button shall be protected from accidental operation. Locate per owner's preference.

2.06 GENERATOR OVERCURRENT AND FAULT PROTECTION

A. Overcurrent protective devices for the entire EPSS shall be coordinated to optimize selective tripping when a short circuit occurs. Coordination of protective devices shall consider both utility and EPSS as the voltage source.

1. Overcurrent protective devices for the EPSS shall be accessible only to authorized personnel.

B. Generator Circuit Breaker: Molded-case, electronic-trip type; 100 percent rated; complying with UL 489.

1. Tripping Characteristics: Adjustable long-time and short-time delay and instantaneous.
2. Trip Settings: Selected to coordinate with generator thermal damage curve.
3. Shunt Trip: Connected to trip breaker when generator set is shut down by other protective devices.
4. Mounting: Adjacent to or integrated with control and monitoring panel.

C. Generator Protector: Microprocessor-based unit shall continuously monitor current level in each phase of generator output, integrate generator heating effect over time, and predict when thermal damage of alternator will occur. When signaled by generator protector or other generator-set protective devices, a shunt-trip device in the generator disconnect switch shall open the switch to disconnect the generator from load circuits. Protector performs the following functions:

1. Initiates a generator overload alarm when generator has operated at an overload equivalent to 110 percent of full-rated load for 60 seconds. Indication for this alarm is integrated with other generator-set malfunction alarms. Contacts shall be available for load shed functions.
2. Under single or three-phase fault conditions, regulates generator to 300 percent of rated full-load current for up to 10 seconds.
3. As overcurrent heating effect on the generator approaches the thermal damage point of the unit, protector switches the excitation system off, opens the generator disconnect device, and shuts down the generator set.
4. Senses clearing of a fault by other overcurrent devices and controls recovery of rated voltage to avoid overshoot.

D. Ground-Fault Indication: Comply with NFPA 70, "Emergency System" signals for ground fault.

1. Indicate ground fault with other generator-set alarm indications.
2. Trip generator protective device on ground fault.

2.07 GENERATOR, EXCITER, AND VOLTAGE REGULATOR

A. Comply with NEMA MG 1.

B. Drive: Generator shaft shall be directly connected to engine shaft. Exciter shall be rotated integrally with generator rotor.

C. Electrical Insulation: Class H or Class F.

D. Stator-Winding Leads: Brought out to terminal box to permit future reconnection for other voltages if required. Provide 12 lead alternator.

E. Range: Provide extended range of output voltage by adjusting the excitation level.

F. Construction shall prevent mechanical, electrical, and thermal damage due to vibration, overspeed up to 125 percent of rating, and heat during operation at 110 percent of rated capacity.

G. Enclosure: Dripproof.

H. Instrument Transformers: Mounted within generator enclosure.

I. Voltage Regulator: Solid-state type, separate from exciter, providing performance as specified and as required by NFPA 110.

1. Adjusting Rheostat on Control and Monitoring Panel: Provide plus or minus 5 percent adjustment of output-voltage operating band.
2. Maintain voltage within 15 percent on one step, full load.
3. Provide anti-hunt provision to stabilize voltage.
4. Maintain frequency within 5 percent and stabilize at rated frequency within 5 seconds.

J. Strip Heater: Thermostatically controlled unit arranged to maintain stator windings above dew point.

K. Windings: Two-thirds pitch stator winding and fully linked amortisseur winding.

L. Subtransient Reactance: 12 percent, maximum.

2.08 LOAD BANK

A. Provide and install a docking station for connection to a portable load bank. Locate per owner’s preference.

2.09 OUTDOOR GENERATOR-SET ENCLOSURE

A. Description: Prefabricated or pre-engineered galvanized-steel-clad, integral structural-steel-framed skin tight enclosure, erected on concrete foundation.

1. Structural Design and Anchorage: Comply with ASCE 7 for wind loads up to 150 mph (240 km/h).
2. Hinged Doors: With padlocking provisions.
3. Space Heater: Thermostatically controlled and sized to prevent condensation.
4. Thermal Insulation: Manufacturer's standard materials and thickness selected in coordination with space heater to maintain winter interior temperature within operating limits required by engine-generator-set components.
5. Muffler Location: External to enclosure.

B. Engine Cooling Airflow through Enclosure: Maintain temperature rise of system components within required limits when unit operates at 110 percent of rated load for 2 hours with ambient temperature at top of range specified in system service conditions.

1. Louvers: Fixed-engine, cooling-air inlet and discharge. Storm-proof and drainable louvers prevent entry of rain and snow.
2. Automatic Dampers: At engine cooling-air inlet and discharge. Dampers shall be closed to reduce enclosure heat loss in cold weather when unit is not operating.

3. Ventilation: Provide temperature-controlled exhaust fan interlocked to prevent operation when engine is running.

C. Interior Lights with Switch: Factory-wired, vapor-proof fixtures within housing; arranged to illuminate controls and accessible interior. Arrange for external electrical connection.

1. AC lighting system and connection point for operation when remote source is available.
2. DC lighting system for operation when remote source and generator are both unavailable.

D. Provide stairs and access platform.

E. Convenience Outlets: Factory wired, GFCI. Arrange for external electrical connection.

2.10 VIBRATION ISOLATION DEVICES

A. Elastomeric Isolator Pads: Oil- and water-resistant elastomer or natural rubber, arranged in single or multiple layers, molded with a nonslip pattern and galvanized-steel baseplates of sufficient stiffness for uniform loading over pad area, and factory cut to sizes that match requirements of supported equipment.

1. Material: Standard neoprene separated by steel shims.

2.11 FINISHES

A. Indoor and Outdoor Enclosures and Components: Manufacturer's standard finish over corrosion-resistant pretreatment and compatible primer.

2.12 SOURCE QUALITY CONTROL

A. Prototype Testing: Factory test engine-generator set using same engine model, constructed of identical or equivalent components and equipped with identical or equivalent accessories.

1. Tests: Comply with NFPA 110, Level 1 Energy Converters and with IEEE 115.

B. Project-Specific Equipment Tests: Before shipment, factory test engine-generator set and other system components and accessories manufactured specifically for this Project. Perform tests at rated load and power factor. Include the following tests:

1. Test components and accessories furnished with installed unit that are not identical to those on tested prototype to demonstrate compatibility and reliability.
2. Test generator, exciter, and voltage regulator as a unit.
3. Full load run.
4. Maximum power.
5. Voltage regulation.
6. Transient and steady-state governing.
7. Single-step load pickup.
8. Safety shutdown.
9. Provide 14 days' advance notice of tests and opportunity for observation of tests by Owner's representative.

C. Report factory test results within 10 days of completion of test.

PART - 3 EXECUTION

3.01 EXAMINATION

A. Examine areas, equipment bases, and conditions, with Installer present, for compliance with requirements for installation and other conditions affecting packaged engine-generator performance.

B. Examine roughing-in for piping systems and electrical connections. Verify actual locations of connections before packaged engine-generator installation.

C. Proceed with installation only after unsatisfactory conditions have been corrected.

3.02 PREPARATION

A. Interruption of Existing Electrical Service: Do not interrupt electrical service to facilities occupied by Owner or others unless permitted under the following conditions and then only after arranging to provide temporary electrical service according to requirements indicated:

1. Notify Construction Manager and Owner no fewer than seven working days in advance of proposed interruption of electrical service.
2. Do not proceed with interruption of electrical service without Construction Manager's and Owner's written permission.

3.03 INSTALLATION

A. Comply with packaged engine-generator manufacturers' written installation and alignment instructions and with NFPA 110.

B. Equipment Mounting:

1. Install packaged engine generators on cast-in-place concrete equipment bases.
2. Coordinate size and location of concrete bases for packaged engine generators. Cast anchor-bolt inserts into bases. Concrete, reinforcement, and formwork requirements are specified with concrete.

C. Install packaged engine-generator to provide access, without removing connections or accessories, for periodic maintenance.

D. Install engine-generator in skin tight enclosure. on 4-inch- (100-mm-) high concrete base. Secure enclosure to anchor bolts installed in concrete bases.

E. Install condensate drain piping to muffler drain outlet full size of drain connection with a shutoff valve, stainless-steel flexible connector, and Schedule 40, black steel pipe with welded joints.

F. Installation requirements for piping materials and flexible connectors are specified in Section 232116 "Hydronic Piping Specialties." Copper and galvanized steel shall not be used in the fuel-oil piping system.

G. Electrical Wiring: Install electrical devices furnished by equipment manufacturers but not specified to be factory mounted.

3.04 CONNECTIONS

A. Ground equipment according to Section 260526 "Grounding and Bonding for Electrical Systems."

B. Connect wiring according to Section 260519 "Low-Voltage Electrical Power Conductors and Cables." Provide a minimum of one 90-degree bend in flexible conduit routed to the generator set from a stationary element.

3.05 IDENTIFICATION

A. Install a sign indicating the generator neutral is bonded to the main service neutral at the main service location.

3.06 FIELD QUALITY CONTROL

A. Perform tests and inspections.

1. Manufacturer's Field Service: Engage a factory-authorized service representative to inspect components, assemblies, and equipment installations, including connections.

B. Tests and Inspections:

1. Perform tests recommended by manufacturer and each visual and mechanical inspection and electrical and mechanical test listed in the first two subparagraphs as specified in NETA Acceptance Testing Specification. Certify compliance with test parameters.

    a. Visual and Mechanical Inspection

        i. Compare equipment nameplate data with drawings and specifications.
        ii. Inspect physical and mechanical condition.
        iii. Inspect anchorage, alignment, and grounding.
        iv. Verify the unit is clean.

    b. Electrical and Mechanical Tests

        i. Perform insulation-resistance tests in accordance with IEEE 43.
            (a) Machines larger than 200 horsepower (150 kilowatts). Test duration shall be 10 minutes. Calculate polarization index.
            (b) Machines 200 horsepower (150 kilowatts) or less. Test duration shall be one minute. Calculate the dielectric-absorption ratio.
        ii. Test protective relay devices.
        iii. Verify phase rotation, phasing, and synchronized operation as required by the application.
        iv. Functionally test engine shutdown for low oil pressure, overtemperature, overspeed, and other protection features as applicable.
        v. Conduct performance test in accordance with NFPA 110.
        vi. Verify correct functioning of the governor and regulator.

2. NFPA 110 Acceptance Tests: Perform tests required by NFPA 110 that are additional to those specified here including, but not limited to, single-step full-load pickup test.
3. Battery Tests: Equalize charging of battery cells according to manufacturer's written instructions. Record individual cell voltages.

    a. Measure charging voltage and voltages between available battery terminals for full-charging and float-charging conditions. Check electrolyte level and specific gravity under both conditions.
    b. Test for contact integrity of all connectors. Perform an integrity load test and a capacity load test for the battery.
    c. Verify acceptance of charge for each element of the battery after discharge.
    d. Verify that measurements are within manufacturer's specifications.

4. Battery-Charger Tests: Verify specified rates of charge for both equalizing and float-charging conditions.
5. System Integrity Tests: Methodically verify proper installation, connection, and integrity of each element of engine-generator system before and during system operation. Check for air, exhaust, and fluid leaks.
6. Exhaust-System Back-Pressure Test: Use a manometer with a scale exceeding 40-inch wg (120 kPa). Connect to exhaust line close to engine exhaust manifold. Verify that back pressure at full-rated load is within manufacturer's written allowable limits for the engine.
7. Exhaust Emissions Test: Comply with applicable government test criteria.
8. Voltage and Frequency Transient Stability Tests: Use recording oscilloscope to measure voltage and frequency transients for 50 and 100 percent step-load increases and decreases, and verify that performance is as specified.
9. Harmonic-Content Tests: Measure harmonic content of output voltage at 25 percent and 100 percent of rated linear load. Verify that harmonic content is within specified limits.
10. Noise Level Tests: Measure A-weighted level of noise emanating from generator-set installation, including engine exhaust and cooling-air intake and discharge, at four locations 25 feet (7.6 m) from edge of the generator enclosure on the property line, and compare measured levels with required values.

C. Test instruments shall have been calibrated within the last 12 months, traceable to NIST Calibration Services, and adequate for making positive observation of test results. Make calibration records available for examination on request.

D. Leak Test: After installation, charge exhaust, coolant, and fuel systems and test for leaks. Repair leaks and retest until no leaks exist.

E. Operational Test: After electrical circuitry has been energized, start units to confirm proper motor rotation and unit operation for generator and associated equipment.

F. Test and adjust controls and safeties. Replace damaged and malfunctioning controls and equipment.

G. Remove and replace malfunctioning units and retest and reinspect as specified above.

H. Retest: Correct deficiencies identified by tests and observations and retest until specified requirements are met.

I. Report results of tests and inspections in writing. Record adjustable relay settings and measured insulation resistances, time delays, and other values and observations. Attach a label or tag to each tested component indicating satisfactory completion of tests.

J. Infrared Scanning: After Substantial Completion, but not more than 60 days after final acceptance, perform an infrared scan of each power wiring termination and each bus connection while running with maximum load. Remove all access panels so terminations and connections are accessible to portable scanner.

1. Follow-up Infrared Scanning: Perform an additional follow-up infrared scan 11 months after date of Substantial Completion.
2. Instrument: Use an infrared scanning device designed to measure temperature or to detect significant deviations from normal values. Provide calibration record for device.
3. Record of Infrared Scanning: Prepare a certified report that identifies terminations and connections checked and that describes scanning results. Include notation of deficiencies detected, remedial action taken, and observations after remedial action.

3.07 MAINTENANCE SERVICE

A. Initial Maintenance Service: Beginning at Substantial Completion, provide 12 months' full maintenance by skilled employees of manufacturer's designated service organization. Include quarterly exercising to check for proper starting, load transfer, and running under load. Include routine preventive maintenance as recommended by manufacturer and adjusting as required for proper operation. Provide parts and supplies same as those used in the manufacture and installation of original equipment.

3.08 DEMONSTRATION

A. Engage a factory-authorized service representative to train Owner's maintenance personnel to adjust, operate, and maintain packaged engine generators.

END OF SECTION

SECTION 16440

PANELBOARDS

PART - 1 GENERAL

1.01 RELATED DOCUMENTS

A. Drawings and general provisions of the Contract, including General and Supplementary Conditions and Division 01 Specification Sections, apply to this Section.

1.02 SUMMARY

A. Section Includes:

1. Lighting and appliance branch-circuit panelboards.

1.03 DEFINITIONS

A. ATS: Acceptance testing specification.

B. GFCI: Ground-fault circuit interrupter.

C. GFEP: Ground-fault equipment protection.

D. HID: High-intensity discharge.

E. MCCB: Molded-case circuit breaker.

F. SPD: Surge protective device.

G. VPR: Voltage protection rating.

1.04 ACTION SUBMITTALS

A. Product Data: For each type of panelboard.

1. Include materials, switching and overcurrent protective devices, SPDs, accessories, and components indicated.
2. Include dimensions and manufacturers' technical data on features, performance, electrical characteristics, ratings, and finishes.

B. Shop Drawings: For each panelboard and related equipment.

1. Include dimensioned plans, elevations, sections, and details.
2. Show tabulations of installed devices with nameplates, conductor termination sizes, equipment features, and ratings.
3. Detail enclosure types including mounting and anchorage, environmental protection, knockouts, corner treatments, covers and doors, gaskets, hinges, and locks.
4. Detail bus configuration, current, and voltage ratings.
5. Short-circuit current rating of panelboards and overcurrent protective devices.
6. Include evidence of NRTL listing for series rating of installed devices.
7. Include evidence of NRTL listing for SPD as installed in panelboard.
8. Detail features, characteristics, ratings, and factory settings of individual overcurrent protective devices and auxiliary components.
9. Include wiring diagrams for power, signal, and control wiring.
10. Key interlock scheme drawing and sequence of operations.

11. Include time-current coordination curves for each type and rating of overcurrent protective device included in panelboards. Submit on translucent log-log graft paper; include selectable ranges for each type of overcurrent protective device. Include an Internet link for electronic access to downloadable PDF of the coordination curves.

1.05 INFORMATIONAL SUBMITTALS

A. Qualification Data: For testing agency.

B. Panelboard Schedules: For installation in panelboards.

1.06 CLOSEOUT SUBMITTALS

A. Operation and Maintenance Data: For panelboards and components to include in emergency, operation, and maintenance manuals. In addition to items specified in Section 017823 "Operation and Maintenance Data," include the following:

1. Manufacturer's written instructions for testing and adjusting overcurrent protective devices.
2. Time-current curves, including selectable ranges for each type of overcurrent protective device that allows adjustments.

1.07 MAINTENANCE MATERIAL SUBMITTALS

A. Furnish extra materials that match products installed and that are packaged with protective covering for storage and identified with labels describing contents.

1. Keys: Two spares for each type of panelboard cabinet lock.
2. Circuit Breakers Including GFCI and GFEP Types: Two spares for each panelboard.

1.08 QUALITY ASSURANCE

A. Manufacturer Qualifications: ISO 9001 or 9002 certified.

1.09 DELIVERY, STORAGE, AND HANDLING

A. Remove loose packing and flammable materials from inside panelboards; install temporary electric heating (250 W per panelboard) to prevent condensation.

B. Handle and prepare panelboards for installation according to NECA 407 or NEMA PB 1.

1.10 FIELD CONDITIONS

A. Environmental Limitations:

1. Do not deliver or install panelboards until spaces are enclosed and weathertight, wet work in spaces is complete and dry, work above panelboards is complete, and temporary HVAC system is operating and maintaining ambient temperature and humidity conditions at occupancy levels during the remainder of the construction period.
2. Rate equipment for continuous operation under the following conditions unless otherwise indicated:

a. Ambient Temperature: Not exceeding 23 deg F (minus 5 deg C) to plus 104 deg F (plus 40 deg C).
b. Altitude: Not exceeding 6600 feet (2000 m).

B. Service Conditions: NEMA PB 1, usual service conditions, as follows:

1. Ambient temperatures within limits specified.
2. Altitude not exceeding 6600 feet (2000 m).

C. Interruption of Existing Electric Service: Do not interrupt electric service to facilities occupied by Owner or others unless permitted under the following conditions and then only after arranging to provide temporary electric service according to requirements indicated:

1. Notify Construction Manager and Owner no fewer than seven days in advance of proposed interruption of electric service.
2. Do not proceed with interruption of electric service without Construction Manager's and Owner's written permission.
3. Comply with NFPA 70E.

1.11 WARRANTY

A. Manufacturer's Warranty: Manufacturer agrees to repair or replace panelboards that fail in materials or workmanship within specified warranty period.

1. Panelboard Warranty Period: 18 months from date of Substantial Completion.

B. Special Warranty: Manufacturer's standard form in which manufacturer agrees to repair or replace SPD that fails in materials or workmanship within specified warranty period.

1. SPD Warranty Period: Five years from date of Substantial Completion.

PART - 2 PRODUCTS

2.01 PANELBOARDS AND LOAD CENTERS COMMON REQUIREMENTS

A. Electrical Components, Devices, and Accessories: Listed and labeled as defined in NFPA 70, by a qualified testing agency, and marked for intended location and application.

B. Comply with NEMA PB 1.

C. Comply with NFPA 70.

D. Enclosures: Surface-mounted, dead-front cabinets.

1. Rated for environmental conditions at installed location.

a. Outdoor Locations: NEMA 250, Type 3R.

2. Height: 84 inches (2.13 m) maximum.
3. Front: Secured to box with concealed trim clamps. For surface-mounted fronts, match box dimensions; for flush-mounted fronts, overlap box. Trims shall cover all live parts and shall have no exposed hardware.
4. Hinged Front Cover: Entire front trim hinged to box and with standard door within hinged trim cover. Trims shall cover all live parts and shall have no exposed hardware.
5. Skirt for Surface-Mounted Panelboards: Same gage and finish as panelboard front with flanges for attachment to panelboard, wall, and ceiling or floor.
6. Gutter Extension and Barrier: Same gage and finish as panelboard enclosure; integral with enclosure body. Arrange to isolate individual panel sections.
7. Finishes:

a. Panels and Trim: Steel, factory finished immediately after cleaning and pretreating with manufacturer's standard two-coat, baked-on finish consisting of prime coat and thermosetting topcoat.

b. Back BoxesSame finish as panels and trim.

E. Incoming Mains:

1. Location: Bottom.
2. Main Breaker: Main lug interiors up to 400 amperes shall be field convertible to main breaker.

F. Phase, Neutral, and Ground Buses:

1. Material: Hard-drawn copper, 98 percent conductivity.

a. Plating shall run entire length of bus.
b. Bus shall be fully rated the entire length.

2. Interiors shall be factory assembled into a unit. Replacing switching and protective devices shall not disturb adjacent units or require removing the main bus connectors.
3. Equipment Ground Bus: Adequate for feeder and branch-circuit equipment grounding conductors; bonded to box.
4. Full-Sized Neutral: Equipped with full-capacity bonding strap for service entrance applications. Mount electrically isolated from enclosure. Do not mount neutral bus in gutter.

G. Conductor Connectors: Suitable for use with conductor material and sizes.

1. Material: Hard-drawn copper, 98 percent conductivity.
2. Terminations shall allow use of 75 deg C rated conductors without derating.
3. Size: Lugs suitable for indicated conductor sizes, with additional gutter space, if required, for larger conductors.
4. Main and Neutral Lugs: Mechanical type, with a lug on the neutral bar for each pole in the panelboard.
5. Ground Lugs and Bus-Configured Terminators: Mechanical type, with a lug on the bar for each pole in the panelboard.

H. NRTL Label: Panelboards or load centers shall be labeled by an NRTL acceptable to authority having jurisdiction for use as service equipment with one or more main service disconnecting and overcurrent protective devices. Panelboards or load centers shall have meter enclosures, wiring, connections, and other provisions for utility metering. Coordinate with utility company for exact requirements.

I. Future Devices: Panelboards or load centers shall have mounting brackets, bus connections, filler plates, and necessary appurtenances required for future installation of devices.

1. Percentage of Future Space Capacity: Ten percent.

J. Panelboard Short-Circuit Current Rating: Fully rated to interrupt symmetrical short-circuit current available at terminals. Assembly listed by an NRTL for 100 percent interrupting capacity.

1. Panelboards and overcurrent protective devices rated 240 V or less shall have short- circuit ratings as shown on Drawings, but not less than 22,000 A rms symmetrical.
2. Panelboards and overcurrent protective devices rated above 240 V and less than 600 V shall have short-circuit ratings as shown on Drawings, but not less than 14,000 A rms symmetrical.

2.02 PERFORMANCE REQUIREMENTS

A. Surge Suppression: Factory installed as an integral part of indicated panelboards, complying with UL 1449 SPD Type 2.

2.03 LIGHTING AND APPLIANCE BRANCH-CIRCUIT PANELBOARDS

A. Square D

B. Eaton

C. Or equal

D. Panelboards: NEMA PB 1, lighting and appliance branch-circuit type.

E. Mains: Circuit breaker.

F. Branch Overcurrent Protective Devices: Bolt-on circuit breakers, replaceable without disturbing adjacent units.

G. Contactors in Main Bus: NEMA ICS 2, Class A, electrically held, general-purpose controller, with same short-circuit interrupting rating as panelboard.

1. Internal Control-Power Source: Control-power transformer, with fused primary and secondary terminals, connected to main bus ahead of contactor connection.
2. External Control-Power Source: 120-V branch circuit.

H. Doors: Concealed hinges; secured with flush latch with tumbler lock; keyed alike.

2.04 DISCONNECTING AND OVERCURRENT PROTECTIVE DEVICES

A. Square D

B. Eaton

C. OR equal

D. MCCB: Comply with UL 489, with interrupting capacity to meet available fault currents.

1. Thermal-Magnetic Circuit Breakers:

a. Inverse time-current element for low-level overloads.
b. Instantaneous magnetic trip element for short circuits.
c. Adjustable magnetic trip setting for circuit-breaker frame sizes 250 A and larger.

2. GFCI Circuit Breakers: Single- and double-pole configurations with Class A ground-fault protection (6-mA trip).
3. GFEP Circuit Breakers: Class B ground-fault protection (30-mA trip).
4. MCCB Features and Accessories:

a. Standard frame sizes, trip ratings, and number of poles.
b. Breaker handle indicates tripped status.
c. UL listed for reverse connection without restrictive line or load ratings.
d. Lugs: Mechanical style, suitable for number, size, trip ratings, and conductor materials.
e. Application Listing: Appropriate for application; Select first option in "Ground- Fault Protection" Subparagraph below for solid-state trip units; select second option for

thermal-magnetic units. If selecting second option, also retain "Shunt Trip" Subparagraph below.

f. Ground-Fault Protection: Integrally mounted relay and trip unit with adjustable pickup and time-delay settings, push-to-test feature, and ground-fault indicator.

2.05 IDENTIFICATION

A. Panelboard Label: Manufacturer's name and trademark, voltage, amperage, number of phases, and number of poles shall be located on the interior of the panelboard door.

B. Breaker Labels: Faceplate shall list current rating, UL and IEC certification standards, and AIC rating.

C. Circuit Directory: Directory card inside panelboard door, mounted in metal frame with transparent protective cover.

1. Circuit directory shall identify specific purpose with detail sufficient to distinguish it from all other circuits.

2.06 ACCESSORY COMPONENTS AND FEATURES

A. Accessory Set: Include tools and miscellaneous items required for overcurrent protective device test, inspection, maintenance, and operation.

B. Portable Test Set: For testing functions of solid-state trip devices without removing from panelboard. Include relay and meter test plugs suitable for testing panelboard meters and switchboard class relays.

PART - 3 EXECUTION

3.01 EXAMINATION

A. Verify actual conditions with field measurements prior to ordering panelboards to verify that equipment fits in allocated space in, and comply with, minimum required clearances specified in NFPA 70.

B. Receive, inspect, handle, and store panelboards according to NECA 407or NEMA PB 1.1.

C. Examine panelboards before installation. Reject panelboards that are damaged, rusted, or have been subjected to water saturation.

D. Examine elements and surfaces to receive panelboards for compliance with installation tolerances and other conditions affecting performance of the Work.

E. Proceed with installation only after unsatisfactory conditions have been corrected.

3.02 INSTALLATION

A. Coordinate layout and installation of panelboards and components with other construction that penetrates walls or is supported by them, including electrical and other types of equipment, raceways, piping, encumbrances to workspace clearance requirements, and adjacent surfaces. Maintain required workspace clearances and required clearances for equipment access doors and panels.

B. Comply with NECA 1.

C. Install panelboards and accessories according to NECA 407or NEMA PB 1.1.

D. Equipment Mounting:

1. Attach panelboard to the vertical finished or structural surface behind the panelboard.

E. Mount panelboard cabinet plumb and rigid without distortion of box.

F. Install overcurrent protective devices and controllers not already factory installed.

1. Tighten bolted connections and circuit breaker connections using calibrated torque wrench or torque screwdriver per manufacturer's written instructions.

G. Make grounding connections and bond neutral for services and separately derived systems to ground. Make connections to grounding electrodes, separate grounds for isolated ground bars, and connections to separate ground bars.

H. Install filler plates in unused spaces.

I. Arrange conductors in gutters into groups and bundle and wrap with wire tie.

3.03 IDENTIFICATION

A. Create a directory to indicate installed circuit loads; incorporate Owner's final room designations. Obtain approval before installing. Handwritten directories are not acceptable. Install directory inside panelboard door.

3.04 FIELD QUALITY CONTROL

A. Perform tests and inspections.

B. Acceptance Testing Preparation:

1. Test insulation resistance for each panelboard bus, component, connecting supply, feeder, and control circuit.
2. Test continuity of each circuit.

C. Tests and Inspections:

1. Perform each visual and mechanical inspection and electrical test for low-voltage air circuit breakers and low-voltage surge arrestors stated in NETA ATS, Paragraph 7.6 Circuit Breakers and Paragraph 7.19.1 Surge Arrestors, Low-Voltage. Certify compliance with test parameters.
2. Correct malfunctioning units on-site, where possible, and retest to demonstrate compliance; otherwise, replace with new units and retest.
3. Perform the following infrared scan tests and inspections and prepare reports:

a. Initial Infrared Scanning: After Substantial Completion, but not more than 60 days after Final Acceptance, perform an infrared scan of each panelboard. Remove front panels so joints and connections are accessible to portable scanner.
b. Follow-up Infrared Scanning: Perform an additional follow-up infrared scan of each panelboard 11 months after date of Substantial Completion.
c. Instruments and Equipment:

i. Use an infrared scanning device designed to measure temperature or to detect significant deviations from normal values. Provide calibration record for device.

D. Panelboards will be considered defective if they do not pass tests and inspections.

E. Prepare test and inspection reports, including a certified report that identifies panelboards included and that describes scanning results, with comparisons of the two scans. Include notation of deficiencies detected, remedial action taken, and observations after remedial action.

3.05 ADJUSTING

A. Adjust moving parts and operable components to function smoothly, and lubricate as recommended by manufacturer.

3.06 PROTECTION

A. Temporary Heating: Prior to energizing panelboards, apply temporary heat to maintain temperature according to manufacturer's written instructions.

END OF SECTION

SECTION 16445

MOTOR CONTROL CENTERS

PART - 1 GENERAL

1.01 RELATED DOCUMENTS

A. Drawings and general provisions of the Contract, including General and Supplementary Conditions and Division 01 Specification Sections, apply to this Section.

1.02 SUMMARY

A. Section includes MCCs for use with ac circuits rated 600 V and less and having the following factory-installed components:

1. Incoming main lugs and OCPDs.
2. Full-voltage magnetic controllers.
3. Reduced-voltage, solid-state controllers.
4. TVSS.
5. Instrumentation.
6. Auxiliary devices.

1.03 DEFINITIONS

A. CE: Conformite Europeene (European Compliance).

B. CPT: Control power transformer.

C. DDC: Direct digital control.

D. EMI: Electromagnetic interference.

E. GFCI: Ground fault circuit interrupting.

F. IGBT: Insulated-gate bipolar transistor.

G. LAN: Local area network.

H. LED: Light-emitting diode.

I. MCC: Motor-control center.

J. MCCB: Molded-case circuit breaker.

K. MCP: Motor-circuit protector.

L. NC: Normally closed.

M. NO: Normally open.

N. OCPD: Overcurrent protective device.

O. PCC: Point of common coupling.

P. PID: Control action, proportional plus integral plus derivative.

Q. PT: Potential transformer.

R. PWM: Pulse-width modulated.

S. RFI: Radio-frequency interference.

T. SCR: Silicon-controlled rectifier.

U. TDD: Total demand (harmonic current) distortion.

V. THD(V): Total harmonic voltage demand.

W. TVSS: Transient voltage surge suppressor.

X. VFC: Variable-frequency controller.

1.04 ACTION SUBMITTALS

A. Product Data: For each type of controller and each type of MCC. Include shipping and operating weights, features, performance, electrical ratings, operating characteristics, and furnished specialties and accessories.

B. Shop Drawings: For each MCC, manufacturer's approval drawings as defined in UL 845. In addition to requirements specified in UL 845, include dimensioned plans, elevations, and sections; and conduit entry locations and sizes, mounting arrangements, and details, including required clearances and service space around equipment.

1. Show tabulations of installed devices, equipment features, and ratings. Include the following:

    a. Each installed unit's type and details.
    b. Factory-installed devices.
    c. Enclosure types and details.
    d. Nameplate legends.
    e. Short-circuit current (withstand) rating of complete MCC, and for bus structure and each unit.
    f. Features, characteristics, ratings, and factory settings of each installed controller and feeder device, and installed devices.
    g. Specified optional features and accessories.

2. Schematic and Connection Wiring Diagrams: For power, signal, and control wiring for each installed controller.
3. Nameplate legends.
4. Vertical and horizontal bus capacities.
5. Features, characteristics, ratings, and factory settings of each installed unit.

1.05 INFORMATIONAL SUBMITTALS

A. Standard Drawings: For each MCC, as defined in UL 845.

B. Production Drawings: For each MCC, as defined in UL 845.

C. Coordination Drawings: Floor plans, drawn to scale, showing dimensioned layout, required working clearances, and required area above and around MCCs where pipe and ducts are prohibited. Show MCC layout and relationships between electrical components and adjacent structural and mechanical elements. Show support locations, type of support, and weight on each support. Indicate field measurements.

D. Qualification Data: For qualified testing agency.

E. Product Certificates: For each MCC, from manufacturer.

F. Source quality-control reports.

G. Field quality-control reports.

H. Current and Overload-Relay Heater List: Compile after motors have been installed, and arrange to demonstrate that selection of heaters suits actual motor nameplate full-load currents.

I. Load-Current and List of Settings of Adjustable Overload Relays: Compile after motors have been installed, and arrange to demonstrate that switch settings for motor running overload protection suit actual motors to be protected.

J. Warranty: Sample of special warranty.

1.06 CLOSEOUT SUBMITTALS

A. Operation and Maintenance Data: For MCCs, all installed devices, and components to include in emergency, operation, and maintenance manuals. In addition to items specified in Section 017823 "Operation and Maintenance Data," include the following:

1. Manufacturer's Record Drawings: As defined in UL 845. In addition to requirements specified in UL 845, include field modifications and field-assigned wiring identification incorporated during construction by manufacturer, Contractor, or both.
2. Manufacturer's written instructions for testing and adjusting circuit breaker and MCP trip settings.
3. Manufacturer's written instructions for setting field-adjustable overload relays.
4. Manufacturer's written instructions for testing, adjusting, and reprogramming reduced-voltage, solid-state controllers.
5. Manufacturer's written instructions for testing, adjusting, and reprogramming microprocessor control modules.
6. Manufacturer's written instructions for setting field-adjustable timers, controls, and status and alarm points.

1.07 MAINTENANCE MATERIAL SUBMITTALS

A. Furnish extra materials described below that match products installed and that are packaged with protective covering for storage and identified with labels describing contents.

1. Power Fuses: Equal to 10 percent of quantity installed for each size and type, but no fewer than three of each size and type.
2. Control Power Fuses: Equal to 10 percent of quantity installed for each size and type, but no fewer than two of each size and type.
3. Indicating Lights: Two of each type and color installed.
4. Auxiliary Contacts: Furnish one spare(s) for each size and type of magnetic controller installed.
5. Power Contacts: Furnish three spares for each size and type of magnetic contactor installed.

1.08 QUALITY ASSURANCE

A. Testing Agency Qualifications: Member company of NETA or an NRTL.

1. Testing Agency's Field Supervisor: Currently certified by NETA to supervise on-site testing.

B. Source Limitations: Obtain MCCs and controllers of a single type from single source from single manufacturer.

C. Electrical Components, Devices, and Accessories: Listed and labeled as defined in NFPA 70, by a qualified testing agency, and marked for intended location and application.

D. Comply with NFPA 70.

1.09 DELIVERY, STORAGE, AND HANDLING

A. Deliver MCCs in shipping splits of lengths that can be moved past obstructions in delivery paths.

B. Handle MCCs according to the following:

1. NEMA ICS 2.3, "Instructions for the Handling, Installation, Operation, and Maintenance of Motor Control Centers Rated Not More Than 600 Volts."
2. NECA 402, "Recommended Practice for Installing and Maintaining Motor Control Centers."

1.10 PROJECT CONDITIONS

A. Environmental Limitations: Rate equipment for continuous operation under the following conditions unless otherwise indicated:

1. Ambient Temperature: Less than 0 deg F (minus 18 deg C) or exceeding 104 deg F (40 deg C), with an average value exceeding 95 deg F (35 deg C) over a 24-hour period.
2. Ambient Storage Temperature: Not less than minus 4 deg F (minus 20 deg C) and not exceeding 140 deg F (60 deg C).
3. Humidity: Less than 95 percent (noncondensing).
4. Altitude: Exceeding 6600 feet (2000 m), or 3300 feet (1000 m) if MCC includes solid- state devices.

B. Interruption of Existing Electrical Service or Distribution Systems: Do not interrupt electrical service to, or distribution systems within, a facility occupied by Owner or others unless permitted under the following conditions, and then only after arranging to provide temporary electrical service according to requirements indicated:

1. Notify Construction Manager and Owner no fewer than twoweeks in advance of proposed interruption of electrical service.
2. Indicate method of providing temporary electrical service.
3. Do not proceed with interruption of electrical service without Construction Manager's and Owner's written permission.
4. Comply with NFPA 70E.

C. Product Selection for Restricted Space: Drawings indicate maximum dimensions for MCCs, including clearances between MCCs and adjacent surfaces and other items.

1.11 COORDINATION

A. Coordinate sizes and locations of concrete bases. Cast anchor-bolt inserts into bases.

B. Coordinate features of MCCs, installed units, and accessory devices with remote pilot devices and control circuits to which they connect.

C. Coordinate features, accessories, and functions of each MCC, each controller, and each installed unit with ratings and characteristics of supply circuits, motors, required control sequences, and duty cycle of motors and loads.

1.12 WARRANTY

A. Special Warranty: Manufacturer's standard form in which manufacturer agrees to repair or replace TVSS that fail in materials or workmanship within specified warranty period.

1. Warranty Period: Five years from date of Substantial Completion.

PART - 2 PRODUCTS

2.01 MANUFACTURED UNITS

A. Square D or equal.

B. General Requirements for MCCs: Comply with NEMA ICS 18 and UL 845.

2.02 FUNCTIONAL FEATURES

A. Description: Modular arrangement of main units, controller units, control devices, feeder-tap units, instruments, metering, auxiliary devices, and other items mounted in vertical sections of MCC.

B. Controller Units: Combination controller units.

1. Equip units in Type B and Type C MCCs with pull-apart terminal strips for external control connections.

C. Future Units: Compartments fully bused and equipped with guide rails or equivalent, ready for insertion of drawout units.

D. Spare Units: Installed in compartments indicated "spare."

2.03 INCOMING MAINS

A. Incoming Mains Location: bottom.

B. Main Lugs Only: Conductor connectors suitable for use with conductor material and sizes.

1. Material: Hard-drawn copper, 98 percent conductivity.
2. Main and Neutral Lugs: Mechanical type.

C. MCCB: Comply with UL 489, with interrupting capacity to meet available fault currents.

1. Thermal-Magnetic Circuit Breakers: Inverse time-current element for low-level overloads, and instantaneous magnetic trip element for short circuits. Adjustable magnetic trip setting for circuit-breaker frame sizes 250 A and larger.
2. Adjustable Instantaneous-Trip Circuit Breakers: Magnetic trip element with front- mounted, field-adjustable trip setting.
3. Electronic trip circuit breakers with rms sensing; field-replaceable rating plug or field-replicable electronic trip; and the following field-adjustable settings:

a. Instantaneous trip.
b. Long- and short-time pickup levels.
c. Long- and short-time time adjustments.
d. Ground-fault pickup level, time delay, and I2t response.

4. MCCB Features and Accessories:

a. Standard frame sizes, trip ratings, and number of poles.
b. Lugs: Mechanical style, suitable for number, size, trip ratings, and conductor material.
c. Ground-Fault Protection: Integrally mounted relay and trip unit with adjustable pickup and time-delay settings, push-to-test feature, and ground-fault indicator.
d. Zone-Selective Interlocking: Integral with electronic trip unit; for interlocking ground-fault protection function.
e. Undervoltage Trip: Set to operate at 35 to 75 percent of rated voltage without intentional time delay.
f. Auxiliary Contacts: Two SPDT switches with "a" and "b" contacts; "a" contacts mimic circuit-breaker contacts, "b" contacts operate in reverse of circuit-breaker contacts.
g. Key Interlock Kit: Externally mounted to prohibit circuit-breaker operation; key shall be removable only when circuit breaker is in off position.

2.04 COMBINATION CONTROLLERS

A. Reduced-Voltage, Solid-State Controllers:

1. General Requirements for Reduced-Voltage, Solid-State Controllers: Comply with UL 508.
2. Reduced-Voltage, Solid-State Controllers: An integrated unit with power SCRs, heat sink, microprocessor logic board, door-mounted digital display and keypad, bypass contactor, and overload relay; suitable for use with NEMA MG 1, Design B, polyphase, medium-induction motors.

a. Configuration: Severe duty; nonreversible.
b. Starting Mode: Voltage ramping.
c. Stopping Mode: Adjustable braking; field selectable.
d. Shorting (Bypass) Contactor: Operates automatically when full voltage is applied to motor, and bypasses the SCRs. Solid-state controller protective features shall remain active when the shorting contactor is in the bypass mode.
e. Shorting and Input Isolation Contactor Coils: Pressure-encapsulated type; manufacturer's standard operating voltage, matching control power or line voltage, depending on contactor size and line-voltage rating.
f. Logic Board: Identical for all ampere ratings and voltage classes, with environmental protective coating.
g. Adjustable acceleration-rate control using voltage or current ramp, and adjustable starting torque control with up to 400 percent current limitation for 20 seconds.
h. SCR bridge shall consist of at least two SCRs per phase, providing stable and smooth acceleration with external feedback from the motor or driven equipment.
i. Keypad, front accessible; for programming the controller parameters, functions, and features; shall be manufacturer's standard and include not less than the following functions:
j. Adjusting motor full-load amperes, as a percentage of the controller's rating.
k. Adjusting current limitation on starting, as a percentage of the motor full-load current rating.
l. Adjusting linear acceleration and deceleration ramps, in seconds.
m. Initial torque, as a percentage of the nominal motor torque.
n. Adjusting torque limit, as a percentage of the nominal motor torque.
o. Adjusting maximum start time, in seconds.
p. Adjusting voltage boost, as a percentage of the nominal supply voltage.
q. Selecting stopping mode, and adjusting parameters.
r. Selecting motor thermal-overload protection class between 5 and 30.
s. Activating and de-activating protection modes.
t. Selecting or activating communications modes.
u. Digital display, front accessible; for showing motor, controller, and fault status; shall be manufacturer's standard and include not less than the following:
v. Controller Condition: Ready, starting, running, stopping.

w. Motor Condition: Amperes, voltage, power factor, power, and thermal state.
x. Fault Conditions: Controller thermal fault, motor overload alarm and trip, motor underload, overcurrent, shorted SCRs, line or phase loss, phase reversal, and line frequency over or under normal.
y. Controller Diagnostics and Protection:
z. Microprocessor-based thermal protection system for monitoring SCR and motor thermal characteristics, and providing controller overtemperature and motor overload alarm and trip; settings selectable via the keypad.
aa. Protection from line-side reverse phasing; line-side and motor-side phase loss; motor jam, stall, and underload conditions; and line frequency over or under normal.
bb. Input isolation contactor that opens when the controller diagnostics detect a faulted solid-state component, or when the motor is stopped.
cc. Remote Output Features:
dd. All outputs prewired to terminal blocks.
ee. Form C status contacts that change state when controller is running.
ff. Form C alarm contacts that change state when a fault condition occurs.
gg. Full-voltage bypass contactor operating automatically. Power contacts shall be totally enclosed, double break, and silver-cadmium oxide; and assembled to allow inspection and replacement without disturbing line or load wiring.

B. Disconnecting Means and OCPDs:

1. MCP Disconnecting Means:

a. UL 489, NEMA AB 1, and NEMA AB 3, with interrupting capacity to comply with available fault currents, instantaneous-only circuit breaker with front- mounted, field-adjustable, short-circuit trip coordinated with motor locked-rotor amperes.
b. Lockable Handle: Accepts three padlocks and interlocks with cover in closed position.
c. Auxiliary contacts "a" and "b" arranged to activate with MCP handle.
d. NC and NO alarm contact that operates only when MCP has tripped.
e. Current-limiting module to increase controller short-circuit current (withstand) rating to 100 kA.

2. MCCB Disconnecting Means:

a. UL 489, NEMA AB 1, and NEMA AB 3, with interrupting capacity to comply with available fault currents; thermal-magnetic MCCB, with inverse time-current element for low-level overloads and instantaneous magnetic trip element for short circuits.
b. Front-mounted, adjustable magnetic trip setting for circuit-breaker frame sizes 250 A and larger.
c. Lockable Handle: Accepts three padlocks and interlocks with cover in closed position.
d. Auxiliary contacts "a" and "b" arranged to activate with MCCB handle.
e. NC and NO alarm contact that operates only when MCCB has tripped.

C. Overload Relays:

1. Solid-State Overload Relays:

a. Switch or dial selectable for motor running overload protection.
b. Sensors in each phase.
c. Class 10/20 selectable tripping characteristic selected to protect motor against voltage and current unbalance and single phasing.
d. Class II ground-fault protection, with start and run delays to prevent nuisance trip on starting.
e. Analog communication module.

2. NC and NO isolated overload alarm contact.

3. External overload reset push button.

D. Control Power:

1. Control Circuits: 120-V ac; obtained from integral CPT, with primary and secondary fuses, with CPT of sufficient capacity to operate integral devices and remotely located pilot, indicating, and control devices.

a. CPT Spare Capacity: 50 VA.

2.05 INSTRUMENTATION

A. Instrument Transformers: IEEE C57.13, NEMA EI 21.1, and the following:

1. PTs: IEEE C57.13; 120 V, 60 Hz, single secondary; disconnecting type with integral fuse mountings. Burden and accuracy shall be consistent with connected metering and relay devices.
2. Current Transformers: IEEE C57.13; 5 A, 60 Hz, secondary; wound type; single secondary winding and secondary shorting device. Burden and accuracy shall be consistent with connected metering and relay devices.
3. CPTs: Dry type, mounted in separate compartments for units larger than 3 kVA.
4. Current Transformers for Neutral and Ground-Fault Current Sensing: Connect secondary wiring to ground overcurrent relays, via shorting terminals, to provide selective tripping of main and tie circuit breaker. Coordinate with feeder circuit-breaker, ground-fault protection.

B. Ammeters, Voltmeters, and Power-Factor Meters: ANSI C39.1.

1. Meters: 4-inch (100-mm) diameter or 6 inches (150 mm) square, flush or semiflush, with antiparallax 250-degree scale and external zero adjustment.
2. Voltmeters: Cover an expanded-scale range of nominal voltage plus 10 percent.

C. Instrument Switches: Rotary type with off position.

1. Voltmeter Switches: Permit reading of all phase-to-phase voltages and phase-to-neutral voltages where a neutral is included.
2. Ammeter Switches: Permit reading of current in each phase and maintain current-transformer secondaries in a closed-circuit condition at all times.

D. Feeder Ammeters: 2-1/2-inch (64-mm) minimum size with 90- or 120-degree scale. Meter and transfer device with off position, located on overcurrent device door for feeder circuits, unless otherwise indicated.

E. Watt-Hour Meters and Wattmeters:

1. Comply with ANSI C12.1.
2. Three-phase induction type with two stators, each with current and potential coil, rated 5 A, 120 V, 60 Hz.
3. Suitable for connection to three- and four-wire circuits.
4. Potential indicating lamps.
5. Adjustments for light and full load, phase balance, and power factor.
6. Four-dial clock register.
7. Integral demand indicator.
8. Contact devices to operate remote impulse-totalizing demand meter.
9. Ratchets to prevent reverse rotation.
10. Removable meter with drawout test plug.
11. Semiflush mounted case with matching cover.
12. Appropriate multiplier tag.

2.06 MCC CONTROL POWER

A. Control Circuits: 120-V ac, supplied through secondary disconnecting devices from CPT.

B. Control Power Fuses: Primary and secondary fuses for current-limiting and overload protection of transformer and fuses for protection of control circuits.

C. Control Wiring: Factory installed, with bundling, lacing, and protection included. Provide flexible conductors for No. 8 AWG and smaller, for conductors across hinges, and for conductors for interconnections between shipping units.

2.07 ENCLOSURES

A. Indoor Enclosures: Freestanding steel cabinets unless otherwise indicated. NEMA 250, Type 3R with painted galvanized finish.

B. Space Heaters: Factory-installed electric space heaters of sufficient wattage in each vertical section to maintain enclosure temperature above expected dew point.

1. Space-Heater Control: Thermostats to maintain temperature of each section above expected dew point.
2. Space-Heater Power Source: Transformer, factory installed in MCC.

C. Enclosure Finish for Indoor Units: Factory-applied finish in manufacturer's standard gray finish over a rust-inhibiting primer on treated metal surface.

D. Compartments: Modular; individual doors with concealed hinges and quick-captive screw fasteners. Interlocks on units requiring disconnecting means in off position before door can be opened or closed, except by operating a permissive release device.

E. Interchangeability: Compartments constructed to allow for removal of units without opening adjacent doors, disconnecting adjacent compartments, or disturbing operation of other units in MCC; same size compartments to permit interchangeability and ready rearrangement of units, such as replacing three single units with a unit requiring three spaces, without cutting or welding.

F. Wiring Spaces:

1. Vertical wireways in each vertical section for vertical wiring to each unit compartment; supports to hold wiring in place.
2. Horizontal wireways in bottom and top of each vertical section for horizontal wiring between vertical sections; supports to hold wiring in place.

2.08 AUXILIARY DEVICES

A. General Requirements for Control-Circuit and Pilot Devices: NEMA ICS 5; factory installed in controller enclosure cover unless otherwise indicated.

1. Push Buttons, Pilot Lights, and Selector Switches: Heavy-duty, oiltight type.

a. Push Buttons: Covered, Lockable,Shielded types; maintained or momentary contact unless otherwise indicated.
b. Pilot Lights: LED types; red, yellow, green; push to test.
c. Selector Switches: Rotary type.

2. Elapsed-Time Meters: Heavy duty with digital readout in hours; resettable.

3. Meters: Panel type, 2-1/2-inch (64-mm) minimum size with 90- or 120-degree scale and plus or minus 2 percent accuracy with selector switches having an off position.

B. NC and NO contactor auxiliary contact(s).

C. Control Relays: Auxiliary and adjustable solid-state time-delay relays.

D. Phase-Failure, Phase-Reversal, and Undervoltage and Overvoltage Relays: Solid-state sensing circuit with isolated output contacts for hard-wired connections. Provide adjustable undervoltage, overvoltage, and time-delay settings.

E. Space heaters, with NC auxiliary contacts, to mitigate condensation in enclosures installed outdoors or in unconditioned interior spaces subject to humidity and temperature swings.

F. Sun shields installed on fronts, sides, and tops of enclosures installed outdoors and subject to direct and extended sun exposure.

G. Cover gaskets for Type 1 enclosures.

H. Spare control-wiring terminal blocks; unwired.

I. Spare-Fuse Cabinet: Identified and compartmented steel box.

2.09 CHARACTERISTICS AND RATINGS

A. Control and Load Wiring: Factory installed, with bundling, lacing, and protection included. Provide flexible conductors for No. 8 AWG and smaller, for conductors across hinges, and for conductors for interconnections between shipping units.

B. Nominal System Voltage: 480Y/277 V, three phase, four wire.

C. Short-Circuit Current Rating for Each Unit: Fully rated; 42 kA.

D. Short-Circuit Current Rating of MCC: Fully rated with its main overcurrent device; 42 kA.

E. Environmental Ratings:

1. Ambient Temperature Rating: Not less than 0 deg F (minus 18 deg C) and not exceeding 104 deg F (40 deg C), with an average value not exceeding 95 deg F (35 deg C) over a 24-hour period.
2. Ambient Storage Temperature Rating: Not less than minus 4 deg F (minus 20 deg C) and not exceeding 140 deg F (60 deg C)
3. Humidity Rating: Less than 95 percent (noncondensing).
4. Altitude Rating: Not exceeding 6600 feet (2000 m), or 3300 feet (1000 m) if MCC includes solid-state devices.

F. Main-Bus Continuous Rating: 600 A.

G. Vertical-Bus Minimum Continuous Rating: 600 A.

H. Horizontal and Vertical Bus Bracing (Short-Circuit Current Rating): Match MCC short-circuit current rating.

I. Main Horizontal and Equipment Ground Buses: Uniform capacity for entire length of MCC's main and vertical sections.

J. Vertical Phase and Equipment Ground Buses: Uniform capacity for entire usable height of vertical sections, except for sections incorporating single units.

K. Phase- and Neutral-Bus Material: Hard-drawn copper of 98 percent conductivity, tin plated.

L. Neutral Buses: 100 percent of the ampacity of phase buses unless otherwise indicated, equipped with mechanical connectors for outgoing circuit neutral cables. Brace bus extensions for busway feeder neutral bus.

M. Ground Bus: Minimum size required by UL 845, hard-drawn copper of 98 percent conductivity, equipped with mechanical connectors for feeder and branch-circuit equipment grounding conductors. For busway feeders, extend insulated equipment grounding cable to busway ground connection and support cable at intervals in vertical run.

N. Front-Connected, Front-Accessible MCCs:

1. Main DevicesFixed mounted.
2. Controller Units: fixed mounted.
3. Feeder-Tap Units: fixed mounted.
4. Sections front and rear aligned.

O. Bus Transition and Incoming Pull Sections: Matched and aligned with basic MCC.

P. Future Devices: Equip compartments with mounting brackets, supports, bus connections, and appurtenances at full rating of unit.

Q. Bus-Bar Insulation: Factory-applied, flame-retardant, tape wrapping of individual bus bars or flame-retardant, spray-applied insulation. Minimum insulation temperature rating of 105 deg C.

R. Fungus Proofing: Permanent fungicidal treatment for OCPDs and other components including instruments and instrument transformers.

2.10 SOURCE QUALITY CONTROL

A. MCC Testing: Inspect and test MCCs according to requirements in NEMA ICS 18.

B. MCCs will be considered defective if they do not pass tests and inspections.

C. Prepare test and inspection reports.

PART - 3 EXECUTION

3.01 EXAMINATION

A. Examine areas and surfaces to receive MCCs, with Installer present, for compliance with requirements for installation tolerances, and other conditions affecting performance of the Work.

B. Examine enclosed controllers before installation. Reject enclosed controllers that are wet, moisture damaged, or mold damaged.

C. Proceed with installation only after unsatisfactory conditions have been corrected.

3.02 INSTALLATION

A. Coordinate layout and installation of MCCs with other construction including conduit, piping, equipment, and adjacent surfaces. Maintain required workspace clearances and required clearances for equipment access doors and panels.

B. Floor-Mounting Controllers: Install MCCs on 4-inch (100-mm) nominal thickness concrete base. Comply with requirements for concrete base.

1. Install dowel rods to connect concrete base to concrete floor. Unless otherwise indicated, install dowel rods on 18-inch (450-mm) centers around the full perimeter of concrete base.
2. For supported equipment, install epoxy-coated anchor bolts that extend through concrete base and anchor into structural concrete floor.
3. Place and secure anchorage devices. Use setting drawings, templates, diagrams, instructions, and directions furnished with items to be embedded.
4. Install anchor bolts to elevations required for proper attachment to supported equipment.

C. Temporary Lifting Provisions: Remove temporary lifting eyes, channels, and brackets and temporary blocking of moving parts from enclosures and components.

D. Install fuses in control circuits if not factory installed.

E. Install heaters in thermal-overload relays. Select heaters based on actual nameplate full-load amperes after motors have been installed.

F. Install, connect, and fuse thermal-protector monitoring relays furnished with motor-driven equipment.

G. Comply with NECA 1.

3.03 IDENTIFICATION

A. Comply with requirements in Section 260553 "Identification for Electrical Systems" for identification of MCC, MCC components, and control wiring.

1. Identify field-installed conductors, interconnecting wiring, and components; provide warning signs.
2. Label MCC and each cubicle with engraved nameplate.
3. Label each enclosure-mounted control and pilot device.
4. Mark up a set of manufacturer's connection wiring diagrams with field-assigned wiring identifications and return to manufacturer for inclusion in Record Drawings.

B. Operating Instructions: Frame printed operating instructions for MCCs, including control sequences and emergency procedures. Fabricate frame of finished metal, and cover instructions with clear acrylic plastic. Mount on front of MCCs.

3.04 CONTROL WIRING INSTALLATION

A. Install wiring between enclosed controllers. Comply with requirements in Section 260523 "Control-Voltage Electrical Power Cables."

B. Bundle, train, and support wiring in enclosures.

C. Connect selector switches and other automatic-control selection devices where applicable.

1. Connect selector switches to bypass only those manual- and automatic-control devices that have no safety functions when switch is in manual-control position.

2. Connect selector switches within enclosed controller circuit in both manual and automatic positions for safety-type control devices such as low- and high-pressure cutouts, high-temperature cutouts, and motor overload protectors.

3.05 CONNECTIONS

A. Comply with requirements for installation of conduit in Section 260533 "Raceways and Boxes for Electrical Systems." Drawings indicate general arrangement of conduit, fittings, and specialties.

B. Comply with requirements in Section 260526 "Grounding and Bonding for Electrical Systems."

3.06 FIELD QUALITY CONTROL

A. Perform tests and inspections.

B. Acceptance Testing Preparation:

1. Test insulation resistance for each enclosed controller, component, connecting supply, feeder, and control circuit.
2. Test continuity of each circuit.

C. Tests and Inspections:

1. Inspect controllers, wiring, components, connections, and equipment installation. Test and adjust controllers, components, and equipment.
2. Test insulation resistance for each enclosed controller element, component, connecting motor supply, feeder, and control circuits.
3. Test continuity of each circuit.
4. Verify that voltages at controller locations are within 10 percent of motor nameplate rated voltages. If outside this range for any motor, notify Construction Manager and Owner before starting the motor(s).
5. Test each motor for proper phase rotation.
6. Perform each electrical test and visual and mechanical inspection stated in NETA Acceptance Testing Specification. Certify compliance with test parameters.
7. Correct malfunctioning units on-site, where possible, and retest to demonstrate compliance; otherwise, replace with new units and retest.
8. Perform the following infrared (thermographic) scan tests and inspections and prepare reports:

    a. Initial Infrared Scanning: After Substantial Completion, but not more than 60 days after Final Acceptance, perform an infrared scan of each multipole enclosed controller. Remove front panels so joints and connections are accessible to portable scanner.
    b. Follow-up Infrared Scanning: Perform an additional follow-up infrared scan of each multipole enclosed controller 11 months after date of Substantial Completion.
    c. Instruments and Equipment: Use an infrared scanning device designed to measure temperature or to detect significant deviations from normal values. Provide calibration record for device.

9. Test and adjust controls, remote monitoring, and safeties. Replace damaged and malfunctioning controls and equipment.
10. Mark up a set of manufacturer's drawings with all field modifications incorporated during construction and return to manufacturer for inclusion in Record Drawings.

D. Enclosed controllers will be considered defective if they do not pass tests and inspections.

E. Prepare test and inspection reports, including a certified report that identifies enclosed controllers and that describes scanning results. Include notation of deficiencies detected, remedial action taken, and observations after remedial action.

3.07 STARTUP SERVICE

A. Perform startup service.

1. Complete installation and startup checks according to manufacturer's written instructions.

3.08 ADJUSTING

A. Set field-adjustable switches, auxiliary relays, time-delay relays, timers, and overload-relay pickup and trip ranges.

B. Adjust overload relay heaters or settings if power factor correction capacitors are connected to the load side of the overload relays.

C. Adjust the trip settings of MCPs and thermal-magnetic circuit breakers with adjustable, instantaneous trip elements. Initially adjust to six times the motor nameplate full-load amperes and attempt to start motors several times, allowing for motor cool-down between starts. If tripping occurs on motor inrush, adjust settings in increments until motors start without tripping. Do not exceed eight times the motor full-load amperes (or 11 times for NEMA Premium Efficient motors if required). Where these maximum settings do not allow starting of a motor, notify Construction Manager and Owner before increasing settings.

D. Set field-adjustable switches and program microprocessors for required start and stop sequences in reduced-voltage, solid-state controllers.

3.09 PROTECTION

A. Temporary Heating: Apply temporary heat to maintain temperature according to manufacturer's written instructions until enclosed controllers are ready to be energized and placed into service.

B. Replace controllers whose interiors have been exposed to water or other liquids prior to Substantial Completion.

3.10 DEMONSTRATION

A. Train Owner's maintenance personnel to adjust, operate, and maintain enclosed controllers, and to use and reprogram microprocessor-based, reduced-voltage, solid-state controllers.

END OF SECTION

SECTION 16460

LOW-VOLTAGE TRANSFORMERS

PART - 1 GENERAL

1.01 RELATED DOCUMENTS

A. Drawings and general provisions of the Contract, including General and Supplementary Conditions and Division 01 Specification Sections, apply to this Section.

1.02 SUMMARY

A. Section Includes: Distribution, dry-type transformers rated 600 V and less, with capacities up to 1500 kVA.

1.03 ACTION SUBMITTALS

A. Product Data: For each type of product.

1. Include construction details, material descriptions, dimensions of individual components and profiles, and finishes for each type and size of transformer.
2. Include rated nameplate data, capacities, weights, dimensions, minimum clearances, installed devices and features, and performance for each type and size of transformer.

B. Shop Drawings:

1. Detail equipment assemblies and indicate dimensions, weights, loads, required clearances, method of field assembly, components, and location and size of each field connection.
2. Vibration Isolation Base Details: Detail fabrication including anchorages and attachments to structure and to supported equipment.
3. Include diagrams for power, signal, and control wiring.

1.04 INFORMATIONAL SUBMITTALS

A. Qualification Data: For testing agency.

B. Source quality-control reports.

C. Field quality-control reports.

1.05 CLOSEOUT SUBMITTALS

A. Operation and Maintenance Data: For transformers to include in emergency, operation, and maintenance manuals.

1.06 QUALITY ASSURANCE

A. Testing Agency Qualifications: Member company of NETA or an NRTL.

1. Testing Agency's Field Supervisor: Certified by NETA to supervise on-site testing.

1.07 DELIVERY, STORAGE, AND HANDLING

A. Temporary Heating: Apply temporary heat according to manufacturer's written instructions within the enclosure of each ventilated-type unit, throughout periods during which

equipment is not energized and when transformer is not in a space that is continuously under normal control of temperature and humidity.

PART - 2 PRODUCTS

2.01 MANUFACTURERS

A. Square D

B. Eaton

C. or equal

D. Source Limitations: Obtain each transformer type from single source from single manufacturer.

2.02 GENERAL TRANSFORMER REQUIREMENTS

A. Description: Factory-assembled and -tested, air-cooled units for 60-Hz service.

B. Electrical Components, Devices, and Accessories: Listed and labeled as defined in NFPA 70, by a qualified testing agency, and marked for intended location and application.

C. Transformers Rated 15 kVA and Larger: Comply with NEMA TP 1 energy-efficiency levels as verified by testing according to NEMA TP 2.

D. Cores: Electrical grade, non-aging silicon steel with high permeability and low hysteresis losses.

E. Coils: Continuous windings without splices except for taps.

1. Internal Coil Connections: Brazed or pressure type.
2. Coil Material: Copper.

F. Encapsulation: Transformers smaller than 30 kVA shall have core and coils completely resin encapsulated.

G. Shipping Restraints: Paint or otherwise color code bolts, wedges, blocks, and other restraints that are to be removed after installation and before energizing. Use fluorescent colors that are easily identifiable inside the transformer enclosure.

2.03 DISTRIBUTION TRANSFORMERS

A. Comply with NFPA 70, and list and label as complying with UL 1561.

B. Provide transformers that are constructed to withstand seismic forces specified in Section 260548.16 "Seismic Controls for Electrical Systems."

C. Cores: One leg per phase.

D. Enclosure: VentilatedTotally enclosed, nonventilated.

1. NEMA 250, Type 3R: Core and coil shall be encapsulated within resin compound utilizing a vacuum pressure impregnation process]to seal out moisture and air.
2. KVA Ratings: Based on convection cooling only and not relying on auxiliary fans.

E. Enclosure: Ventilated.

1. NEMA 250, Type 3R: Core and coil shall be encapsulated within resin compound, sealing out moisture and air.

F. Transformer Enclosure Finish: Comply with NEMA 250.

1. Finish Color: Gray.

G. Insulation Class, Smaller than 30 kVA: 185 deg C, UL-component-recognized insulation system with a maximum of 115-deg C rise above 40-deg C ambient temperature.

H. K-Factor Rating: Transformers indicated to be K-factor rated shall comply with UL 1561 requirements for nonsinusoidal load current-handling capability to the degree defined by designated K-factor.

1. Unit shall not overheat when carrying full-load current with harmonic distortion corresponding to designated K-factor.
2. Indicate value of K-factor on transformer nameplate.
3. Unit shall meet requirements of NEMA TP 1 when tested according to NEMA TP 2 with a K-factor equal to one.

I. Electrostatic Shielding: Each winding shall have an independent, single, full-width copper electrostatic shield arranged to minimize interwinding capacitance.

1. Arrange coil leads and terminal strips to minimize capacitive coupling between input and output terminals.
2. Include special terminal for grounding the shield.

J. Neutral: Rated 200 percent of full load current for K-factor rated transformers.

2.04 IDENTIFICATION DEVICES

A. Nameplates: Engraved, laminated-plastic or metal nameplate for each distribution transformer, mounted with corrosion-resistant screws.

2.05 SOURCE QUALITY CONTROL

A. Test and inspect transformers according to IEEE C57.12.01 and IEEE C57.12.91.

1. Resistance measurements of all windings at the rated voltage connections and at all tap connections.
2. Ratio tests at the rated voltage connections and at all tap connections.
3. Phase relation and polarity tests at the rated voltage connections.
4. No load losses, and excitation current and rated voltage at the rated voltage connections.
5. Impedance and load losses at rated current and rated frequency at the rated voltage connections.
6. Applied and induced tensile tests.
7. Regulation and efficiency at rated load and voltage.
8. Insulation Resistance Tests:

    a. High-voltage to ground.
    b. Low-voltage to ground.
    c. High-voltage to low-voltage.

9. Temperature tests.

PART - 3 EXECUTION

3.01 EXAMINATION

A. Examine conditions for compliance with enclosure- and ambient-temperature requirements for each transformer.

B. Verify that field measurements are as needed to maintain working clearances required by NFPA 70 and manufacturer's written instructions.

C. Examine walls, floors, roofs, and concrete bases for suitable mounting conditions where transformers will be installed.

D. Verify that ground connections are in place and requirements in Section 260526 "Grounding and Bonding for Electrical Systems" have been met. Maximum ground resistance shall be 5 ohms at location of transformer.

E. Environment: Enclosures shall be rated for the environment in which they are located. Covers for NEMA 250, Type 4X enclosures shall not cause accessibility problems.

F. Proceed with installation only after unsatisfactory conditions have been corrected.

3.02 INSTALLATION

A. Install transformers level and plumb on a concrete base with vibration-dampening supports. Locate transformers away from corners and not parallel to adjacent wall surface.

B. Secure covers to enclosure and tighten all bolts to manufacturer-recommended torques to reduce noise generation.

C. Remove shipping bolts, blocking, and wedges.

3.03 CONNECTIONS

A. Ground equipment according to Section 260526 "Grounding and Bonding for Electrical Systems."

B. Connect wiring according to Section 260519 "Low-Voltage Electrical Power Conductors and Cables."

C. Tighten electrical connectors and terminals according to manufacturer's published torque-tightening values. If manufacturer's torque values are not indicated, use those specified in UL 486A-486B.

D. Provide flexible connections at all conduit and conductor terminations and supports to eliminate sound and vibration transmission to the building structure.

3.04 FIELD QUALITY CONTROL

A. Perform tests and inspections and prepare test reports.

B. Tests and Inspections:

1. Perform each visual and mechanical inspection and electrical test stated in NETA ATS for dry-type, air-cooled, low-voltage transformers. Certify compliance with test parameters.

C. Remove and replace units that do not pass tests or inspections and retest as specified above.

D. Infrared Scanning: Two months after Substantial Completion, perform an infrared scan of transformer connections.

1. Use an infrared-scanning device designed to measure temperature or detect significant deviations from normal values. Provide documentation of device calibration.
2. Perform two follow-up infrared scans of transformers, one at four months and the other at 11 months after Substantial Completion.
3. Prepare a certified report identifying transformer checked and describing results of scanning. Include notation of deficiencies detected, remedial action taken, and scanning observations after remedial action.

E. Test Labeling: On completion of satisfactory testing of each unit, attach a dated and signed "Satisfactory Test" label to tested component.

3.05 ADJUSTING

A. Record transformer secondary voltage at each unit for at least 48 hours of typical occupancy period. Adjust transformer taps to provide optimum voltage conditions at secondary terminals. Optimum is defined as not exceeding nameplate voltage plus 5 percent and not being lower than nameplate voltage minus 3 percent at maximum load conditions. Submit recording and tap settings as test results.

B. Output Settings Report: Prepare a written report recording output voltages and tap settings.

3.06 CLEANING

A. Vacuum dirt and debris; do not use compressed air to assist in cleaning.

END OF SECTION

SECTION 16510

LED INTERIOR LIGHTING

PART - 1 GENERAL

1.01 RELATED DOCUMENTS

A. Drawings and general provisions of the Contract, including General Conditions and Supplementary Conditions and Division 01 Specification Sections, apply to this Section.

1.02 SUMMARY

A. Section Includes:

1. Interior solid-state luminaires that use LED technology.
2. Lighting fixture supports.

1.03 DEFINITIONS

A. CCT: Correlated color temperature.

B. CRI: Color Rendering Index.

C. Fixture: See "Luminaire.

D. IP: International Protection or Ingress Protection Rating.

E. LED: Light-emitting diode.

F. Lumen: Measured output of lamp and luminaire, or both.

G. Luminaire: Complete lighting unit, including lamp, reflector, and housing.

1.04 ACTION SUBMITTALS

A. Product Data: For each type of product.

1. Arrange in order of luminaire designation.
2. Include data on features, accessories, and finishes.
3. Include physical description and dimensions of luminaires.
4. Include emergency lighting units, including batteries and chargers.
5. Include life, output (lumens, CCT, and CRI), and energy efficiency data.
6. Photometric data and adjustment factors based on laboratory tests, complying with IESNA Lighting Measurements Testing and Calculation Guides, of each lighting fixture type. The adjustment factors shall be for lamps and accessories identical to those indicated for the lighting fixture as applied in this Project.

    a. Manufacturers' Certified Data: Photometric data certified by manufacturer's laboratory with a current accreditation under the National Voluntary Laboratory Accreditation Program for Energy Efficient Lighting Products.
    b. Testing Agency Certified Data: For indicated luminaires, photometric data certified by a qualified independent testing agency. Photometric data for remaining luminaires shall be certified by manufacturer.

B. Shop Drawings: For nonstandard or custom luminaires.

1. Include plans, elevations, sections, and mounting and attachment details.
2. Include details of luminaire assemblies. Indicate dimensions, weights, loads, required clearances, method of field assembly, components, and location and size of each field connection.
3. Include diagrams for power, signal, and control wiring.

C. Product Schedule: For luminaires and lamps. Use same designations indicated on Drawings.

D. Provide photometric calculations for each luminaire.

1.05 INFORMATIONAL SUBMITTALS

A. Coordination Drawings: Reflected ceiling plan(s) and other details, drawn to scale, on which the following items are shown and coordinated with each other, using input from installers of the items involved:

1. Lighting luminaires.
2. Suspended ceiling components.
3. Partitions and millwork that penetrate the ceiling or extend to within 12 inches (300 mm) of the plane of the luminaires.
4. Structural members to which luminaires will be attached.
5. Initial access modules for acoustical tile, including size and locations.

B. Qualification Data: For testing laboratory providing photometric data for luminaires.

C. Detailed description of equipment anchorage devices on which the certification is based and their installation requirements.

D. Product Certificates: For each type of luminaire.

E. Product Test Reports: For each luminaire, for tests performed by manufacturer and witnessed by a qualified testing agency.

F. Sample warranty.

1.06 CLOSEOUT SUBMITTALS

A. Operation and Maintenance Data: For luminaires and lighting systems to include in operation and maintenance manuals.

1. Provide a list of all lamp types used on Project; use ANSI and manufacturers' codes.

1.07 MAINTENANCE MATERIAL SUBMITTALS

A. Furnish extra materials that match products installed and that are packaged with protective covering for storage and identified with labels describing contents.

1. Lamps: Ten for every 100 of each type and rating installed. Furnish at least one of each type.
2. Diffusers and Lenses: One for every 100 of each type and rating installed. Furnish at least one of each type.
3. Globes and Guards: One for every 20 of each type and rating installed. Furnish at least one of each type.

1.08 QUALITY ASSURANCE

A. Luminaire Photometric Data Testing Laboratory Qualifications: Provided by an independent agency, with the experience and capability to conduct the testing indicated, that is an NRTL as defined by OSHA in 29 CFR 1910.7, accredited under the NVLAP for Energy Efficient Lighting Products, and complying with the applicable IES testing standards.

B. Provide luminaires from a single manufacturer for each luminaire type.

C. Each luminaire type shall be binned within a three-step MacAdam Ellipse to ensure color consistency among luminaires.

1.09 DELIVERY, STORAGE, AND HANDLING

A. Protect finishes of exposed surfaces by applying a strippable, temporary protective covering before shipping.

1.10 WARRANTY

A. Warranty: Manufacturer and Installer agree to repair or replace components of luminaires that fail in materials or workmanship within specified warranty period.

B. Warranty Period: Five year(s) from date of Substantial Completion.

PART - 2 PRODUCTS

2.01 PERFORMANCE REQUIREMENTS

A. Seismic Performance: Luminaires shall withstand the effects of earthquake motions determined according to ASCE/SEI 7

2.02 LUMINAIRE REQUIREMENTS

A. Electrical Components, Devices, and Accessories: Listed and labeled as defined in NFPA 70, by a qualified testing agency, and marked for intended location and application.

B. NRTL Compliance: Luminaires for hazardous locations shall be listed and labeled for indicated class and division of hazard by an NRTL.

C. FM Global Compliance: Luminaires for hazardous locations shall be listed and labeled for indicated class and division of hazard by FM Global.

D. Recessed Fixtures: Comply with NEMA LE 4.

E. Bulb shape complying with ANSI C79.1.

F. Lamp base complying with ANSI C81.61 or IEC 60061-1.

G. Rated lamp life of 50,000 hours.

H. Lamps dimmable from 100 percent to 0 percent of maximum light output.

I. Internal driver.

J. Nominal Operating Voltage: 120 V ac.

1. Lens Thickness: At least 0.125 inch (3.175 mm) minimum unless otherwise indicated.

K. Housings:

1. Per light fixture schedule.

2.03 SURFACE MOUNT, LINEAR

A. Minimum 750 lumens. Minimum allowable efficacy of 80 lumens per watt.

B. Integral junction box with conduit fittings.

2.04 MATERIALS

A. Metal Parts:

1. Free of burrs and sharp corners and edges.
2. Sheet metal components shall be steel unless otherwise indicated.
3. Form and support to prevent warping and sagging.

B. Doors, Frames, and Other Internal Access: Smooth operating, free of light leakage under operating conditions, and designed to permit relamping without use of tools. Designed to prevent doors, frames, lenses, diffusers, and other components from falling accidentally during relamping and when secured in operating position.

C. Diffusers and Globes:

1. Acrylic Diffusers: One hundred percent virgin acrylic plastic, with high resistance to yellowing and other changes due to aging, exposure to heat, and UV radiation.
2. Glass: Annealed crystal glass unless otherwise indicated.
3. Lens Thickness: At least 0.125 inch (3.175 mm) minimum unless otherwise indicated.

D. Housings:

1. Extruded-aluminum housing and heat sink.

E. Factory-Applied Labels: Comply with UL 1598. Include recommended lamps. Locate labels where they will be readily visible to service personnel, but not seen from normal viewing angles when lamps are in place.

1. Label shall include the following lamp characteristics:

a. "USE ONLY" and include specific lamp type.
b. Lamp diameter, shape, size, wattage, and coating.
c. CCT and CRI for all luminaires.

2.05 METAL FINISHES

A. Variations in finishes are unacceptable in the same piece. Variations in finishes of adjoining components are acceptable if they are within the range of approved Samples and if they can be and are assembled or installed to minimize contrast.

PART - 3 EXECUTION

3.01 EXAMINATION

A. Examine substrates, areas, and conditions, with Installer present, for compliance with requirements for installation tolerances and other conditions affecting performance of the Work.

B. Examine roughing-in for luminaire to verify actual locations of luminaire and electrical connections before fixture installation. Proceed with installation only after unsatisfactory conditions have been corrected.

3.02 TEMPORARY LIGHTING

A. If approved by the Architect, use selected permanent luminaires for temporary lighting. When construction is sufficiently complete, clean luminaires used for temporary lighting and install new lamps.

3.03 INSTALLATION

A. Comply with NECA 1.

B. Install luminaires level, plumb, and square with ceilings and walls unless otherwise indicated.

C. Install lamps in each luminaire.

D. Supports:

1. Sized and rated for luminaire weight.
2. Able to maintain luminaire position after cleaning and relamping.
3. Provide support for luminaire without causing deflection of ceiling or wall.
4. Luminaire mounting devices shall be capable of supporting a horizontal force of 100 percent of luminaire weight and vertical force of 400 percent of luminaire weight.

E. Wall-Mounted Luminaire Support:

1. Attached to structural members in walls.
2. Do not attach luminaires directly to gypsum board.

F. Ceiling-Mounted Luminaire Support:

1. Ceiling mount with hook mount.

G. Comply with requirements in Section 260519 "Low-Voltage Electrical Power Conductors and Cables" for wiring connections.

3.04 FIELD QUALITY CONTROL

A. Perform the following tests and inspections:

1. Operational Test: After installing luminaires, switches, and accessories, and after electrical circuitry has been energized, test units to confirm proper operation.
2. Test for Emergency Lighting: Interrupt power supply to demonstrate proper operation. Verify transfer from normal power to battery power and retransfer to normal.

B. Luminaire will be considered defective if it does not pass operation tests and inspections.

C. Prepare test and inspection reports.

END OF SECTION

SECTION 16520

EXTERIOR LIGHTING

PART - 1 GENERAL

1.01 RELATED DOCUMENTS

A. Drawings and general provisions of the Contract, including General and Supplementary Conditions and Division 01 Specification Sections, apply to this Section.

1.02 SUMMARY

A. Section Includes:

1. Exterior luminaires with lamps and ballasts.
2. Luminaire-mounted photoelectric relays.

1.03 DEFINITIONS

A. CCT: Correlated color temperature.

B. CRI: Color-rendering index.

C. HID: High-intensity discharge.

D. LER: Luminaire efficacy rating.

E. Luminaire: Complete lighting fixture, including ballast housing if provided.

1.04 ACTION SUBMITTALS

A. Product Data: For each luminaire, arranged in order of lighting unit designation. Include data on features, accessories, finishes, and the following:

1. Physical description of luminaire, including materials, dimensions, effective projected area, and verification of indicated parameters.
2. Details of attaching luminaires and accessories.
3. Details of installation and construction.
4. Luminaire materials.
5. Photometric data based on laboratory tests of each luminaire type, complete with indicated lamps, ballasts, and accessories.

a. Testing Agency Certified Data: For indicated luminaires, photometric data shall be certified by a qualified independent testing agency. Photometric data for remaining luminaires shall be certified by manufacturer.
b. Manufacturer Certified Data: Photometric data shall be certified by manufacturer's laboratory with a current accreditation under the National Voluntary Laboratory Accreditation Program for Energy Efficient Lighting Products.

6. Photoelectric relays.
7. Ballasts, including energy-efficiency data.
8. Lamps, including life, output, CCT, CRI, lumens, and energy-efficiency data.
9. Means of attaching luminaires to supports, and indication that attachment is suitable for components involved.

B. Shop Drawings: Include plans, elevations, sections, details, and attachments to other work.

1. Detail equipment assemblies and indicate dimensions, weights, loads, required clearances, method of field assembly, components, and location and size of each field connection.
2. Design calculations, certified by a qualified professional engineer, indicating strength of screw foundations and soil conditions on which they are based.
3. Wiring Diagrams: For power, signal, and control wiring.

C. Samples: For products designated for sample submission in the Exterior Lighting Device Schedule. Each Sample shall include lamps and ballasts.

1.05 INFORMATIONAL SUBMITTALS

A. Qualification Data: For qualified agencies providing photometric data for lighting fixtures.

B. Field quality-control reports.

C. Warranty: Sample of special warranty.

1.06 CLOSEOUT SUBMITTALS

A. Operation and Maintenance Data: For luminaires to include in emergency, operation, and maintenance manuals.

1.07 MAINTENANCE MATERIAL SUBMITTALS

A. Furnish extra materials that match products installed and that are packaged with protective covering for storage and identified with labels describing contents.

1. Glass and Plastic Lenses, Covers, and Other Optical Parts: two of each type and rating installed.
2. Globes and Guards: two of each type and rating installed.

1.08 QUALITY ASSURANCE

A. Luminaire Photometric Data Testing Laboratory Qualifications: Provided by an independent agency, with the experience and capability to conduct the testing indicated, that is an NRTL as defined by OSHA in 29 CFR 1910.

B. Electrical Components, Devices, and Accessories: Listed and labeled as defined in NFPA 70, by a qualified testing agency, and marked for intended location and application.

C. Comply with IEEE C2, "National Electrical Safety Code."

D. Comply with NFPA 70.

1.09 WARRANTY

A. Special Warranty: Manufacturer's standard form in which manufacturer agrees to repair or replace products that fail in materials or workmanship; that corrode; or that fade, stain, perforate, erode, or chalk due to effects of weather or solar radiation within specified warranty period. Manufacturer may exclude lightning damage, hail damage, vandalism, abuse, or unauthorized repairs or alterations from special warranty coverage.

1. Warranty Period for Luminaires: Five years from date of Substantial Completion.
2. Warranty Period for Metal Corrosion: Five years from date of Substantial Completion.
3. Warranty Period for Color Retention: Five years from date of Substantial Completion.

PART - 2 PRODUCTS

2.01 MANUFACTURERS

A. Products: Subject to compliance with requirements, provide product indicated on Drawings.

2.02 GENERAL REQUIREMENTS FOR LUMINAIRES

A. Luminaires shall comply with UL 1598 and be listed and labeled for installation in wet locations by an NRTL acceptable to authorities having jurisdiction.

1. LER Tests Incandescent Fixtures: Where LER is specified, test according to NEMA LE 5A.
2. LER Tests Fluorescent Fixtures: Where LER is specified, test according to NEMA LE 5 and NEMA LE 5A as applicable.
3. LER Tests HID Fixtures: Where LER is specified, test according to NEMA LE 5B.

B. Lateral Light Distribution Patterns: Comply with IESNA RP-8 for parameters of lateral light distribution patterns indicated for luminaires.

C. Metal Parts: Free of burrs and sharp corners and edges.

D. Sheet Metal Components: Corrosion-resistant aluminum unless otherwise indicated. Form and support to prevent warping and sagging.

E. Housings: Rigidly formed, weather- and light-tight enclosures that will not warp, sag, or deform in use. Provide filter/breather for enclosed luminaires.

F. Doors, Frames, and Other Internal Access: Smooth operating, free of light leakage under operating conditions, and designed to permit relamping without use of tools. Designed to prevent doors, frames, lenses, diffusers, and other components from falling accidentally during relamping and when secured in operating position. Doors shall be removable for cleaning or replacing lenses. Designed to disconnect ballast when door opens.

G. Exposed Hardware Material: Stainless steel.

H. Plastic Parts: High resistance to yellowing and other changes due to aging, exposure to heat, and UV radiation.

I. Light Shields: Metal baffles, factory installed and field adjustable, arranged to block light distribution to indicated portion of normally illuminated area or field.

J. Reflecting surfaces shall have minimum reflectance as follows unless otherwise indicated:

1. White Surfaces: 85 percent.
2. Specular Surfaces: 83 percent.
3. Diffusing Specular Surfaces: 75 percent.

K. Lenses and Refractors Gaskets: Use heat- and aging-resistant resilient gaskets to seal and cushion lenses and refractors in luminaire doors.

L. Luminaire Finish: Manufacturer's standard paint applied to factory-assembled and -tested luminaire before shipping.

M. Factory-Applied Finish for Steel Luminaires: Comply with NAAMM's "Metal Finishes Manual for Architectural and Metal Products" for recommendations for applying and designating finishes.

1. Surface Preparation: Clean surfaces to comply with SSPC-SP 1, "Solvent Cleaning," to remove dirt, oil, grease, and other contaminants that could impair paint bond. Grind welds and polish surfaces to a smooth, even finish. Remove mill scale and rust, if present, from uncoated steel, complying with SSPC-SP 5/NACE No. 1, "White Metal Blast Cleaning," or SSPC-SP 8, "Pickling."
2. Exterior Surfaces: Manufacturer's standard finish consisting of one or more coats of primer and two finish coats of high-gloss, high-build polyurethane enamel.

    a. Color: As selected from manufacturer's standard catalog of colors.
    b. Color: As selected by Architect from manufacturer's full range.

N. Factory-Applied Finish for Aluminum Luminaires: Comply with NAAMM's "Metal Finishes Manual for Architectural and Metal Products" for recommendations for applying and designating finishes.

1. Finish designations prefixed by AA comply with the system established by the Aluminum Association for designating aluminum finishes.
2. Natural Satin Finish: Provide fine, directional, medium satin polish (AA-M32); buff complying with AA-M20; and seal aluminum surfaces with clear, hard-coat wax.
3. Class I, Clear Anodic Finish: AA-M32C22A41 (Mechanical Finish: medium satin; Chemical Finish: etched, medium matte; Anodic Coating: Architectural Class I, clear coating 0.018 mm or thicker) complying with AAMA 611.
4. Class I, Color Anodic Finish: AA-M32C22A42/A44 (Mechanical Finish: medium satin; Chemical Finish: etched, medium matte; Anodic Coating: Architectural Class I, integrally colored or electrolytically deposited color coating 0.018 mm or thicker) complying with AAMA 611.

    a. Color: Black

O. Factory-Applied Labels: Comply with UL 1598.

2.03 LUMINAIRE-MOUNTED PHOTOELECTRIC RELAYS

A. Comply with UL 773 or UL 773A.

B. Contact Relays: Factory mounted, single throw, designed to fail in the on position, and factory set to turn light unit on at 1.5 to 3 fc (16 to 32 lx) and off at 4.5 to 10 fc (48 to 108 lx) with 15- second minimum time delay. Relay shall have directional lens in front of photocell to prevent artificial light sources from causing false turnoff.

1. Relay with locking-type receptacle shall comply with ANSI C136.10.
2. Adjustable window slide for adjusting on-off set points.

PART - 3 EXECUTION

3.01 LUMINAIRE INSTALLATION

A. Install lamps in each luminaire.

B. Fasten luminaire to indicated structural supports.

1. Use fastening methods and materials selected to resist seismic forces defined for the application and approved by manufacturer.

3.02 CORROSION PREVENTION

A. Aluminum: Do not use in contact with earth or concrete. When in direct contact with a dissimilar metal, protect aluminum by insulating fittings or treatment.

B. Steel Conduits: Comply with Section 260533 "Raceways and Boxes for Electrical Systems." In concrete foundations, wrap conduit with 0.010-inch- (0.254-mm-) thick, pipe-wrapping plastic tape applied with a 50 percent overlap.

3.03 FIELD QUALITY CONTROL

A. Inspect each installed fixture for damage. Replace damaged fixtures and components.

B. Illumination Observations: Verify normal operation of lighting units after installing luminaires and energizing circuits with normal power source.

1. Verify operation of photoelectric controls.

C. Illumination Tests:

1. Measure light intensities at night. Use photometers with calibration referenced to NIST standards. Comply with the following IESNA testing guide(s):

D. Prepare a written report of tests, inspections, observations, and verifications indicating and interpreting results. If adjustments are made to lighting system, retest to demonstrate compliance with standards.

3.04 DEMONSTRATION

A. Train Owner's maintenance personnel to adjust, operate, and maintain luminaire lowering devices.

END OF SECTION

WEST ST. TAMMANY REGIONAL SEWER TREATMENT FACILITY
BID NO.: 24-31-2

INFLUENT PUMP STATION
WEST ST. TAMMANY COMMUNITY SEWER SYSTEM
MADISONVILLE, ST. TAMMANY PARISH, LOUISIANA
PROJECT No.: TU23000178

INDEX OF SHEETS:

G-1	TITLE SHEET
G-2	GENERAL NOTES
G-3	PROCESS FLOW DIAGRAM
GC-1	CIVIL DETAILS - I
GC-2	CIVIL DETAILS - II
C-1	EXISTING SITE PLAN
C-2	SITE PLAN
C-3	YARD PIPING PLAN
C-4	PAVING PLAN
GM-1	PROCESS MECHANICAL DETAILS - I
M-1	INFLUENT PUMP STATION - PLAN
M-2	INFLUENT PUMP STATION - SECTION
M-3	INFLUENT PUMP STATION - SECTION
M-4	SCREEN OVERFLOW AT EQ TANK
GS-1	STRUCTURAL - GENERAL NOTES
GS-2	STRUCTURAL - GENERAL DETAILS
GS-3	STRUCTURAL DETAILS
GS-4	STRUCTURAL DETAILS
S-1	INFLUENT PUMP STATION - PLAN
S-2	INFLUENT PS - FOUNDATION PLAN
S-3	INFLUENT PUMP STATION - SECTION
S-4	INFLUENT PUMP STATION - SECTION
E-1	SYMBOL SCHEDULE, ABBR. & GENERAL NOTES
E-2	EXISTING ONE LINE DIAGRAM
E-3	ONE LINE DIAGRAM - INFLUENT PUMPS
E-4	PANEL & LIGHT FIXTURE SCHEDULES
E-5	SITE PLAN - ELECTRICAL
E-6	SITE PLAN - INFLUENT PUMP BUILDING, GENERATOR, GROUNDING
E-7	SITE PLAN - INFLUENT PUMP BUILDING, GENERATOR, POWER
E-8	INFLUENT PUMP BUILDING PLAN - POWER
E-9	INFLUENT PUMP BUILDING PLAN - LIGHTING
E-10	INFLUENT PUMP PLATFORM PLAN - INSTRUMENTATION
E-11	CONDUIT AND CABLE SCHEDULE - ELECTRICAL
E-12	CONDUIT AND CABLE SCHEDULE - INSTRUMENTATION
E-13	CONTROL SYSTEM RISER DIAGRAM
E-14	RVSS BLOCK DIAGRAM
E-15	ELECTRICAL DETAILS
E-16	ELECTRICAL DETAILS

CONSTRUCTION TYPE:
MUNICIPAL & PUBLIC WORKS

LOCATION MAP
(NOT TO SCALE)

LDH PERMIT NO. 23-09-103-152

PARISH PRESIDENT

MICHAEL B. COOPER

PARISH COUNCIL

ARTHUR LAUGHLIN
COUNCIL CHAIRMAN
DISTRICT 11

JOE IMPASTATO
COUNCIL VICE-CHAIRMAN
DISTRICT 7

COUNCIL MEMBERS

RICK SMITH	DISTRICT 1
LARRY ROLLING	DISTRICT 2
MARTHA J. CAZAUBON	DISTRICT 3
KATHY SEIDEN	DISTRICT 4
PAT PHILLIPS	DISTRICT 5
CHERYL S. TANNER	DISTRICT 6
JOE IMPASTATO	DISTRICT 7
PATRICK "PAT" BURKE III	DISTRICT 8
DAVID COUGLE	DISTRICT 9
MAUREEN "MO" O'BRIEN	DISTRICT 10
ARTHUR LAUGHLIN	DISTRICT 11
JERRY BINDER	DISTRICT 12
JEFFREY CORBIN	DISTRICT 13
JIMMY "GUMBY" STRICKLAND III	DISTRICT 14

PLANS PREPARED AND RECOMMENDED FOR APPROVAL:

Digitally signed by Kevin M. Drane
DN: C=US, E=kdrane@kyleassociates.net, O=Kyle Associates, CN=Kevin M. Drane
Date: 2024.07.09 15:15:10-05'00'

KYLE ASSOCIATES, L.L.C. DATE
KEVIN M. DRANE, P.E.

APPROVED BY:

Digitally signed by Christopher P. Tissue
DN: C=US, E=cptissue@stpgov.org, O=St. Tammany Parish Government, OU=Department of Utilities, CN=Christopher P. Tissue
Date: 2024.07.09 15:28:49-05'00'

ST. TAMMANY PARISH GOVERNMENT DATE
CHRISTOPHER P. TISSUE, P.E., DIRECTOR
DEPARTMENT OF UTILITIES

DEPT. OF UTILITIES
ST. TAMMANY PARISH GOVERNMENT
620 N. TYLER STREET
COVINGTON, LA 70433

No.	DESCRIPTION OF REVISION	DATE:

DESIGNED BY:	KMD
DRAWN BY:	IGAL
CHECKED BY:	KMD
SUBMITTED BY:	KYLE ASSOC.
PROJECT No.:	TU23000178
ISSUE DATE:	6/19/2024
APPROVED BY:	---
SHEET SIZE:	ANSI D
SCALE:	INTS

KEVIN M. DRANE
License No. 35485
07/19/24
PROFESSIONAL ENGINEER
STATE OF LOUISIANA

WEST ST TAMMANY REGIONAL STF
INFLUENT PUMP STATION
COVINGTON, LOUISIANA
PROJECT No.: TU 23000178

TITLE SHEET

SH SHT.
G-1

File:N:\2023\23031 - West St Tammany Regional Sewer Treatment Facility\Drawings\General\23031 - G1Titlesheet.dwg Plot Date: Tuesday, July 9, 2024 1:49:07 PM User: Kevin Drane

Plot Date: Tuesday, July 9, 2024 1:50:44 PM
User: Kevin Drane

GENERAL NOTES:

1. THE WORK SHALL BE COMPLETED IN ACCORDANCE WITH THE PLANS AND SPECIFICATIONS.
2. SUBMIT SHOP DRAWINGS OF ALL PIPING, VALVES, ETC. TO THE ENGINEER FOR APPROVAL PRIOR TO COMMENCING WORK.
3. THE WORK SHALL BE CONFINED TO LIMITS OF CONSTRUCTIONS AS SHOWN ON THE PLANS. THE CONTRACTOR'S STAGING AND STORAGE AREAS SHALL BE LOCATED WITH IN THE LIMITS OF CONSTRUCTION. IF THE CONTRACTOR REQUIRES ADDITIONAL STAGING OR STORAGE SPACE, THE CONTRACTOR SHALL COORDINATE WITH THE OWNER TO DETERMINE AN ACCEPTABLE ON– OR OFF–SITE LOCATION.
4. THE CONTRACTOR SHALL NOT DISTURB ANY WETLANDS.
5. CONTRACTOR OPERATIONS SHALL NOT INTERFERE OR RESTRICT THE OWNER'S ACCESS AND OPERATION OF THE FACILITY.
6. ALL MATERIALS AND COMPONENTS OF THE WATER SYSTEM SHALL BE MANUFACTURED, PRODUCED OR OTHERWISE BE OF UNITED STATES OF AMERICA ORIGIN.
7. CONSTRUCTION PLANS ARE IN LOUISIANA STATE PLANE SOUTH COORDINATE SYSTEM. THE VERTICAL DATUM FOR ALL ELEVATIONS ARE REFERENCED TO NORTH AMERICAN VERTICAL DATUM 1988 (NAVD88).
8. A TEMPORARY BENCHMARK HAS BEEN ESTABLISHED. THE HORIZONTAL AND VERTICAL LOCATION OF THE TEMPORARY BENCHMARK IS AS FOLLOWS

   N: 717332.80
   E: 3641493.41
   ELEVATION=25.5'

9. THE CONTRACTOR SHALL USE THE HORIZONTAL AND VERTICAL CONTROLS ESTABLISHED FOR PROJECT.
10. THE CONTRACTOR SHALL FIELD VERIFY ALL ELEVATIONS, GRADES AND MEASUREMENTS PRIOR TO STARTING ANY CONSTRUCTION.
11. TO ENSURE THE CONSTRUCTION OPERATIONS REMAIN IN THE RIGHT–OF–WAY OR UTILITY SERVITUDE, THE CONTRACTOR SHALL STAKE THE RIGHT–OF–WAY AND/OR SERVITUDE LINE PRIOR TO COMMENCING WORK.
12. MINIMUM COVER OVER PIPING SHALL BE AT LEAST 3 FEET UNLESS OTHERWISE STATED IN THE PLANS OR AS APPROVED BY THE OWNER IN WRITING.
13. THE CONTRACTOR SHALL PROVIDE RED–LINE DRAWINGS TO BE USED BY THE ENGINEER OF RECORD FOR THE PROJECT IN THE PREPARATION OF RECORD DRAWINGS / AS–BUILT DRAWINGS. RECORD DRAWINGS / AS–BUILT DRAWINGS SHALL BE SUBMITTED AS PART OF THE PROJECT CLOSE–OUT DOCUMENTS.
14. EXISTING UTILITY LOCATIONS AS SHOWN ON THE PLANS ARE APPROXIMATE. THE CONTRACTOR SHALL CONTACT LOUISIANA ONE CALL TO LOCATE AND MARK SUBSURFACE UTILITIES. THE CONTRACTOR SHALL BE RESPONSIBLE FOR COORDINATING AND RESOLVING CONFLICTS WITH THE RESPECTIVE UTILITY OWNERS. A LIST OF UTILITY OWNERS AND POINTS OF CONTACT ARE PROVIDED BELOW.

AT&T
STEVE BERGERON
(985) 327–6432

ATMOS
RODNEY BABIN
(985) 290–0897

CLECO
PAUL GITZ
(985) 807–3755

15. THE CONTRACTOR SHALL VERIFY THE REQUIRED HORIZONTAL AND VERTICAL CLEARANCES WITH THE RESPECTIVE UTILITY OWNER PRIOR TO BEGINNING WORK.
16. CONCERNS REGARDING THE DEPARTMENT OF UTILITIES FACILITIES SHALL BE DIRECTED TO THE FOLLOWING PERSON:

FIELD OPERATIONS SUPERVISOR
(985) 893–1717

17. THE CONTRACTOR SHALL PROTECT SURROUNDING FACILITIES, INCLUDING BUT NOT LIMITED TO BUILDINGS, PAVEMENT, LANDSCAPING AND UTILITIES FROM DAMAGE. THE CONTRACTOR SHALL REPAIR OR REPLACE DAMAGED FACILITIES AT NO ADDITIONAL COST TO THE OWNER. THE CONTRACTOR SHALL REPAIR OR REPLACE DAMAGED FACILITIES TO THE OWNERS SATISFACTION.
18. LOCATIONS OF UTILITIES IDENTIFIED BY DEPARTMENT OF UTILITIES ARE APPROXIMATE. CONTRACTOR SHALL FIELD VERIFY ALL AFFECTED UTILITIES (I.E. WATER, SEWER, GAS, ETC.) PRIOR TO DIGGING AND/OR BORING. ANY DAMAGE SHALL BE REPAIRED IMMEDIATELY BY THE CONTRACTOR AT NO ADDITIONAL COST TO THE PROJECT.
19. SERVICE INTERRUPTIONS ASSOCIATED WITH FINAL CONNECTIONS SHALL BE APPROVED BY THE DEPARTMENT OF UTILITIES PRIOR TO COMMENCING THE TIE–IN WORK. THE CONTRACTOR SHALL CONTACT THE DEPARTMENT AT LEAST 5 DAYS PRIOR TO HIS PROPOSED SERVICE INTERRUPTION DATE.
20. CUSTOMERS AFFECTED BY THE PLANNED SERVICE INTERRUPTION SHALL BE NOTIFIED IN WRITING 48 HOURS IN ADVANCE OF APPROVED SERVICE OUTAGE DATE.
21. THE CONTRACTOR SHALL RESTORE THE GROUND IN AND AROUND THE WORK AREA TO THE SATISFACTION OF THE OWNER. THE WORK AREA SHALL BE CLEANED AND MADE READY FOR RE–OCCUPANCY BY THE OWNER UPON COMPLETING ALL CONSTRUCTION ACTIVITIES.
22. THE WORK AREA SHALL BE KEPT CLEAN THROUGHOUT THE DURATION OF THE PROJECT. THE CONTRACTOR SHALL COLLECT AND REMOVE ANY DEBRIS OR TRASH FROM WORK AREA ON DAILY BASIS. DEBRIS OR TRASH SHALL BE STORED IN REFUSE CONTAINERS OR BINS UNTIL REMOVAL FROM THE SITE.
23. THE CONTRACTOR MAY USE THE AREA BETWEEN THE EXISTING WWTP FENCE AND THE CLECO ROW FOR EQUIPMENT AND MATERIAL STAGING AND STORAGE AFTER COORDINATING WITH THE DEPARTMENT OF UTILITIES. THE CONTRACTOR SHALL BE RESPONSIBLE FOR SAFE KEEPING AND SECURITY OF ALL MATERIAL AND EQUIPMENT STORED IN THIS LOCATION.
24. ITEMS INDICATED TO BE RETURNED TO DU SHALL BE DELIVERED TO DU MAINTENANCE BARN LOCATED AT 620 N. TYLER STREET, COVINGTON.

DEPT. OF UTILITIES
ST. TAMMANY PARISH GOVERNMENT
620 N. TYLER STREET
COVINGTON, LA 70433

No.	DESCRIPTION OF REVISION	DATE:

DESIGNED BY:	---
DRAWN BY:	---
CHECKED BY:	---
SUBMITTED BY:	KYLE ASSOC.
PROJECT No.:	TU23000178
ISSUE DATE:	6/12/2024
APPROVED BY:	---
SHEET SIZE:	ANSI D
SCALE:	---

STATE OF LOUISIANA
KEVIN M. DRANE
License No. 35485
7/17/24
PROFESSIONAL ENGINEER

WEST ST TAMMANY REGIONAL STF
INFLUENT PUMP STATION
COVINGTON, LOUISIANA
PROJECT No.: TU 23000178

GENERAL NOTES

SHEET NO.
G–2

File:N:\2023\23033 - West St Tammany Regional Sewer Treatment Facility\Drawings\General\G-002_GeneralNotes.dwg

PROCESS FLOW DIAGRAM

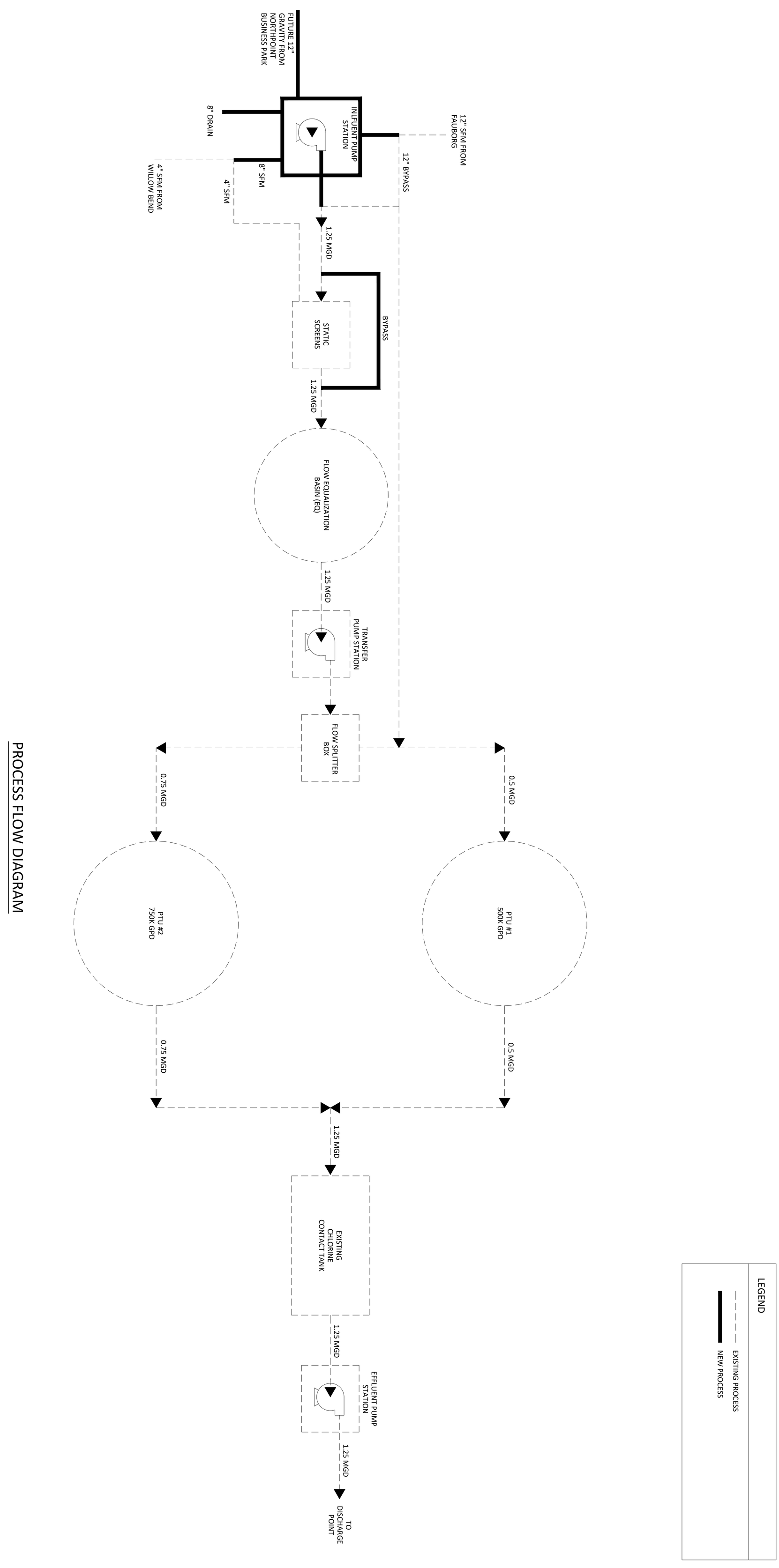

SHEET NO.	G-3
	WEST ST TAMMANY REGIONAL STF INFLUENT PUMP STATION COVINGTON, LOUISIANA PROJECT No.: TU 23000178
	PROCESS FLOW DIAGRAM

STATE OF LOUISIANA — KEVIN M. DRANE — License No. 35485 — PROFESSIONAL ENGINEER

DESIGNED BY:	KMD
DRAWN BY:	KMD
CHECKED BY:	KMD
SUBMITTED BY:	KYLE ASSOC.
PROJECT No.:	TU23000178
ISSUE DATE:	6/12/2024
APPROVED BY:	---
SHEET SIZE:	ANSI D
SCALE:	NONE

No.	DESCRIPTION OF REVISION	DATE:

DEPT. OF UTILITIES
ST. TAMMANY PARISH GOVERNMENT
620 N. TYLER STREET
COVINGTON, LA 70433

ST. TAMMANY PARISH GOVERNMENT

CIVIL GENERAL NOTES

GENERAL

1. THE CONTRACTOR SHALL TAKE ALL PRECAUTIONARY MEASURES NECESSARY TO PROTECT EXISTING IMPROVEMENTS WHICH ARE TO REMAIN IN PLACE FROM DAMAGE. ALL IMPROVEMENTS DAMAGED BY THE CONTRACTOR'S OPERATIONS SHALL BE EXPEDITIOUSLY REPAIRED OR RECONSTRUCTED TO THE CLIENT'S SATISFACTION AT THE CONTRACTOR'S EXPENSE WITHOUT ADDITIONAL COMPENSATION.
2. THE CONTRACTOR SHALL PROPERLY DISPOSE AT AN APPROVED LANDFILL OR, OTHER SUITABLE DISPOSAL SITES ALL DEBRIS FROM DEMOLITION AT CONTRACTORS EXPENSE.
3. CONTRACTOR SHALL RESTORE ALL SURVEY MONUMENTS THAT ARE DAMAGED OR DESTROYED DURING CONSTRUCTION.
4. ALL ELEVATIONS ARE NAVD 88.

UTILITIES

1. PRIOR TO THE START OF CONSTRUCTION, THE CONTRACTOR SHALL LOCATE ALL EXISTING UTILITIES IN AND AROUND THE AREAS OF NEW CONSTRUCTION. THE CONTRACTOR SHALL POTHOLE FOR EXISTING UTILITIES PRIOR TO SUBMITTAL OF SHOP DRAWINGS, FOR POINTS OF CONNECTIONS.
2. LOCATIONS OF UNDERGROUND UTILITIES SHOWN ON THE DRAWINGS WERE OBTAINED FROM AVAILABLE RECORDS. THE CONTRACTOR SHALL VERIFY ALL LOCATIONS AND ELEVATIONS AND SHALL TAKE ALL PRECAUTIONARY MEASURES NECESSARY TO PROTECT UTILITY LINES WHETHER SHOWN OR NOT SHOWN.
3. PRIOR TO ANY CONNECTION TO AN EXISTING UTILITY, THE CONTRACTOR SHALL COORDINATE WITH THE UTILITY OWNER.
4. ALL KNOWN UTILITIES ARE SHOWN ON THE PROJECT DRAWINGS. ADDITIONAL CONFLICTS UNKNOWN TO THE OWNER MAY BE ENCOUNTERED DURING CONSTRUCTION. THE CONTRACTOR SHALL CONTACT LA-ONE CALL, PHONE 1-800-272-3020, FOR UTILITY LOCATION 72 HOURS PRIOR TO BEGINNING ANY CONSTRUCTION. CONTRACTOR SHALL TAKE ALL NECESSARY PRECAUTIONS TO PROTECT EXISTING UTILITIES.

PIPING

1. THE CONTRACTOR SHALL COMPLY WITH THE LOUISIANA DEPARTMENT OF HEALTH GUIDELINES FOR THE SEPARATION OF WATER MAINS AND SANITARY SEWERS.
2. THE CONTRACTOR SHALL PROVIDE A MINIMUM OF 30 INCHES OF COVER ON ALL PIPELINES UNLESS OTHERWISE SHOWN OR DIRECTED.
3. STRAIGHT SLOPES SHALL BE MAINTAINED BETWEEN INVERT ELEVATIONS SHOWN OR SPECIFIED.
4. THE CONTRACTOR SHALL ADJUST ALL VALVE BOXES, PULL BOXES AND MANHOLES TO FINISHED GRADE UNLESS OTHERWISE SHOWN OR SPECIFIED. MANHOLES IN OPEN FIELDS SHALL BE SET ONE FOOT ABOVE GRADE. APPROXIMATE RIM ELEVATIONS ARE SHOWN ON DRAWINGS.
5. ALL PIPE TRENCHING AND BACKFILL SHALL BE IN ACCORDANCE WITH DETAIL C-7 ON SHEET GC-2.

EROSION CONTROL

THE CONTRACTOR SHALL SUBMIT AN EROSION CONTROL PLAN FOR WORK DURING THE CONSTRUCTION PRIOR TO THE START OF CONSTRUCTION.

1.
   a. THE CONTRACTOR IS RESPONSIBLE FOR IMPLEMENTATION AND MAINTENANCE OF EROSION CONTROL MEASURES CONTAINED WITHIN THE CONTRACT SPECIFICATIONS OR AS REQUIRED BY THE PARISH, DISTRICT, OR OTHER REGULATORY AUTHORITY. THE CONTRACTOR SHALL ALSO PROVIDE ANY ADDITIONAL EROSION CONTROL MEASURES (E.G. HYDROSEEDING, MULCHING OF STRAW, SAND BAGGING, DIVERSION DITCHES, ETC.) DICTATED BY FIELD CONDITIONS TO PREVENT EROSION OR THE INTRODUCTION OF DIRT, MUD, OR DEBRIS INTO EXISTING PUBLIC STREETS, WATERWAYS, OR ONTO ADJACENT PROPERTIES DURING ANY PHASE OF CONSTRUCTION OPERATIONS.

SUGGESTED SEQUENCE OF CONSTRUCTION:

THE FOLLOWING IS THE SUGGESTED SEQUENCE OF CONSTRUCTION FOR THE PROJECT IN ACCORDANCE WITH THE CONTRACT DRAWINGS AND SPECIFICATIONS; HOWEVER, CONTRACTOR IS ULTIMATELY RESPONSIBLE FOR PERFORMING THE WORK IN A REASONABLE, SEQUENTIAL MANNER THAT PROVIDES FOR THE COMPLETE INSTALLATION AND FUNCTION OF ALL PROPOSED INFRASTRUCTURE WHILE PROVIDING FOR PROPER CONSTRUCTION ACCESS. CONTRACTOR IS ALSO RESPONSIBLE FOR ENSURING THAT THE EXISTING WASTEWATER TREATMENT PLANT REMAINS IN OPERATION AND IS ACCESSIBLE BY THE OWNER THROUGHOUT THE CONSTRUCTION.

1. PERFORM SITE CLEARING AND REMOVAL OF ALL SITE OBSTRUCTIONS AS INDICATED ON THE CONTRACT DOCUMENTS AS WELL AS INSTALL ALL NEW SITE FENCING TO ENSURE A PROPERLY SECURED SITE FOR THE CONTRACTOR AND OWNER.
2. PERFORM EXPLORATORY EXCAVATIONS AS NECESSARY TO VERIFY THE SIZE/LOCATION OF ALL UNDERGROUND PIPING INDICATED. COORDINATE WITH OWNER/ENGINEER TO ENSURE A COMPLETE UNDERSTANDING OF ALL PIPE ROUTING AND PROPER SEQUENCING OF EXISTING PIPE REMOVAL AND/OR RELOCATION.
3. INSTALL TEMPORARY SEWER FORCEMAINS AND WATER LINES AROUND SITE TO PROVIDE CONTINUOUS SERVICE TO EXISTING WASTEWATER TREATMENT PLANT AND REMOVE EXISTING LINES WITHIN FOOTPRINT OF NEW CONSTRUCTION. ROUTING OF TEMPORARY LINES SHALL BE DETERMINED BY CONTRACTOR AND SHALL BE DONE IN A MANNER THAT ENSURES THE LINES ARE PROPERLY PROTECTED FROM CONSTRUCTION TRAFFIC AND DO NOT INTERFERE WITH OTHER EXISTING INFRASTRUCTURE OR NEW INFRASTRUCTURE BEING CONSTRUCTED AS PART OF THIS PROJECT.
4. TESTING AND STARTUP OF COMPLETE NEW INFLUENT LIFT STATION.
5. SITE CLEANUP, FINAL LIMESTONE TOPPING OF SITE AND PUNCH LIST COMPLETION.

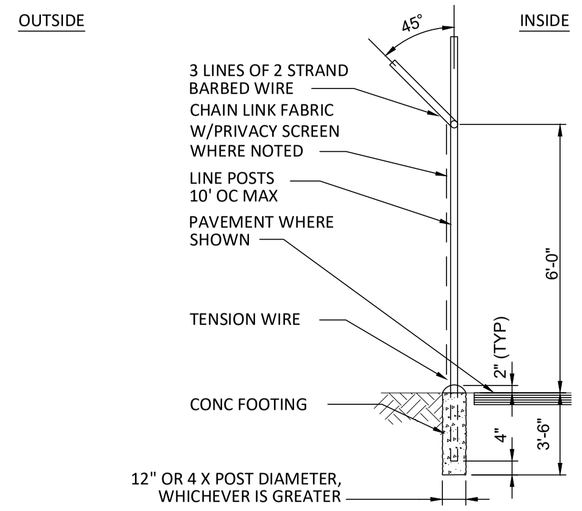

NOTES:
1. SEE SPECIFICATIONS FOR FENCE MATERIAL, COATINGS, AND INSTALLATION REQUIREMENTS.
2. EXTENSION ARM MAY BE TURNED IN AT OPTION OF OWNER.

CHAIN LINK FENCE C-1

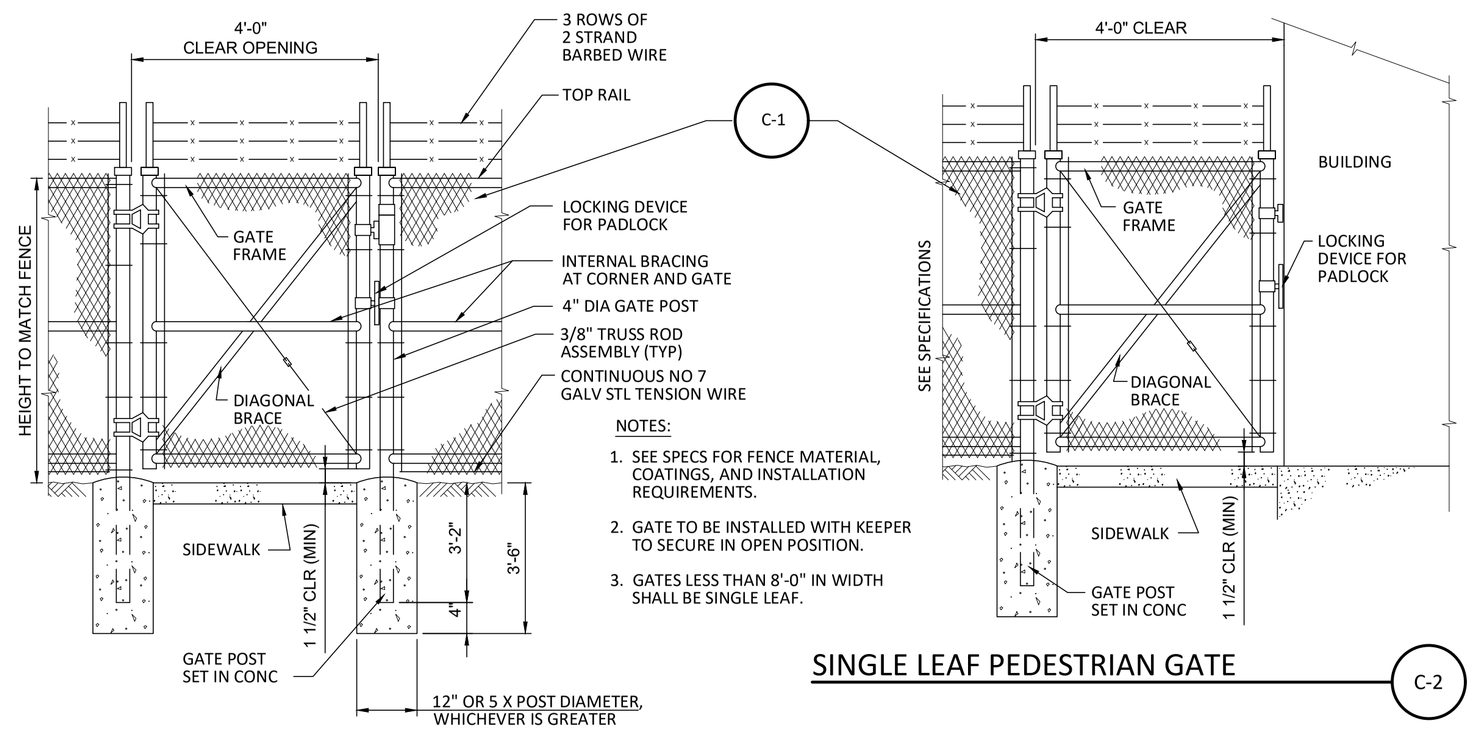

NOTES:
1. SEE SPECS FOR FENCE MATERIAL, COATINGS, AND INSTALLATION REQUIREMENTS.
2. GATE TO BE INSTALLED WITH KEEPER TO SECURE IN OPEN POSITION.
3. GATES LESS THAN 8'-0" IN WIDTH SHALL BE SINGLE LEAF.

SINGLE LEAF PEDESTRIAN GATE C-2

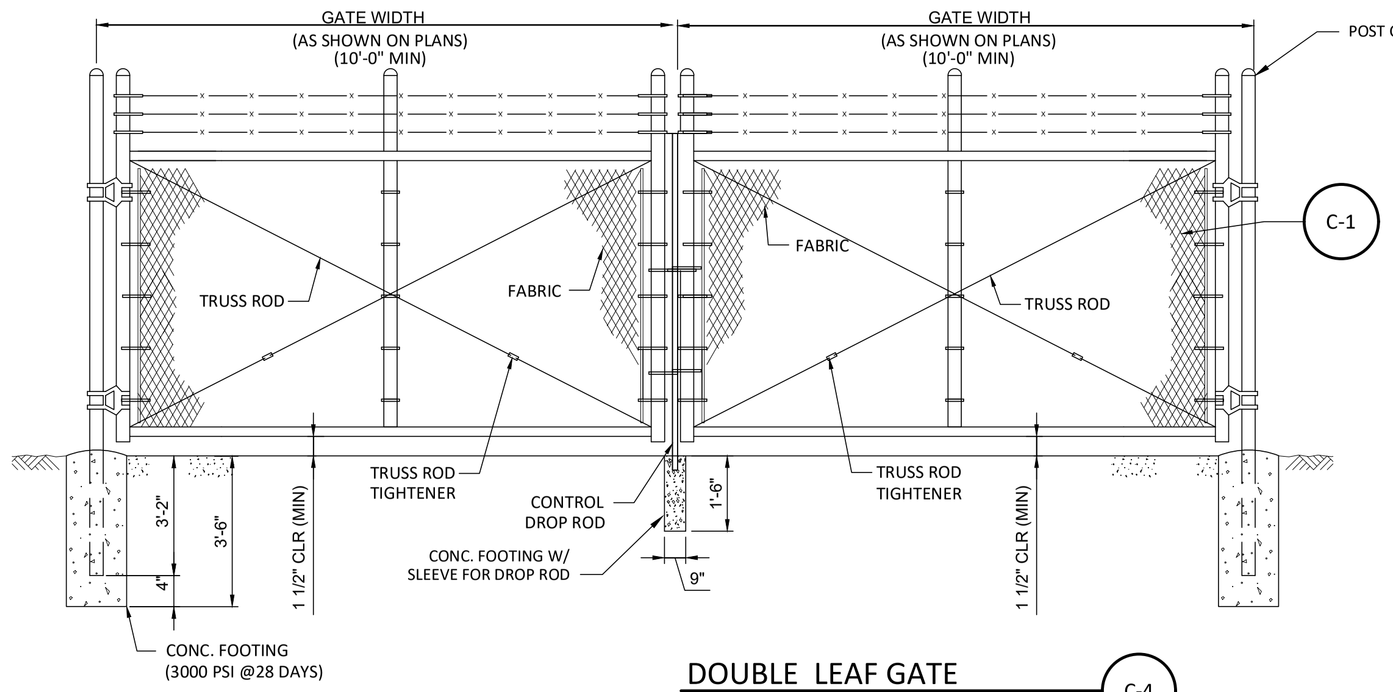

DOUBLE LEAF GATE C-4

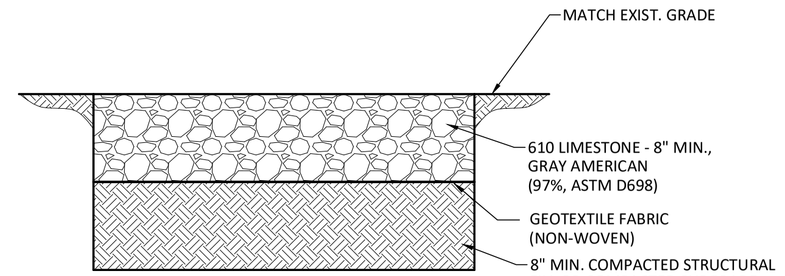

TYPICAL LIMESTONE SURFACING DETAIL C-6

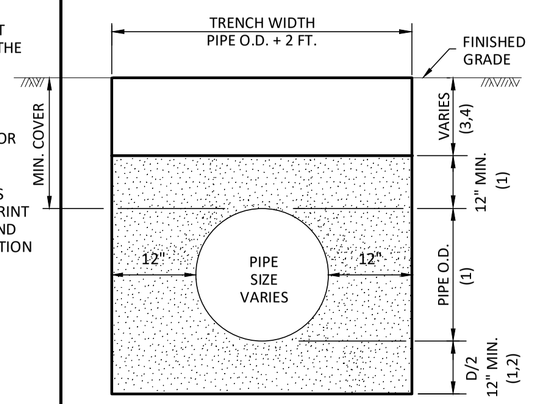

MIN. COVER	PIPE SIZE (IN.)
3 FT.	LESS THAN 12
4 FT.	12 AND GREATER

NOTES:
1. COMPACTED GRANULAR MATERIAL MIN. DENSITY 95% STANDARD PROCTOR (ASTM D698) 6" MAX. LAYERS.
2. PROVIDE BELL HOLES AT EACH JOINT.
3. SELECT EXCAVATED MATERIAL FREE OF STUMPS, DEBRIS AND VOIDS FOR NON-PAVED AREA.
4. COMPACTED GRANULAR MATERIAL WITHIN THE STREETS RIGHT-OF-WAY MIN. DENSITY 95% STANDARD PROCTOR (ASTM D698) 6" MAX. LAYERS.
5. WHERE GROUND WATER OR UNSTABLE TRENCH BOTTOM EXISTS, TRENCH BOTTOM SHALL BE STABILIZED (ASTM D2321) TO PROVIDE A WORKING PLATFORM.
6. TRENCH DETAIL SHOWN SHALL BE MINIMUM REQUIREMENTS TO SAFEGUARD THE INTEGRITY OF THE UTILITY LINE INSTALLATION AT REQUIRED DEPTHS. THE CONTRACTOR SHALL PROVIDE SUFFICIENT SHEETING AND BRACING TO PROVIDE SAFE WORKING CONDITIONS FOR HIS WORKERS.

STANDARD PIPE TRENCH C-7

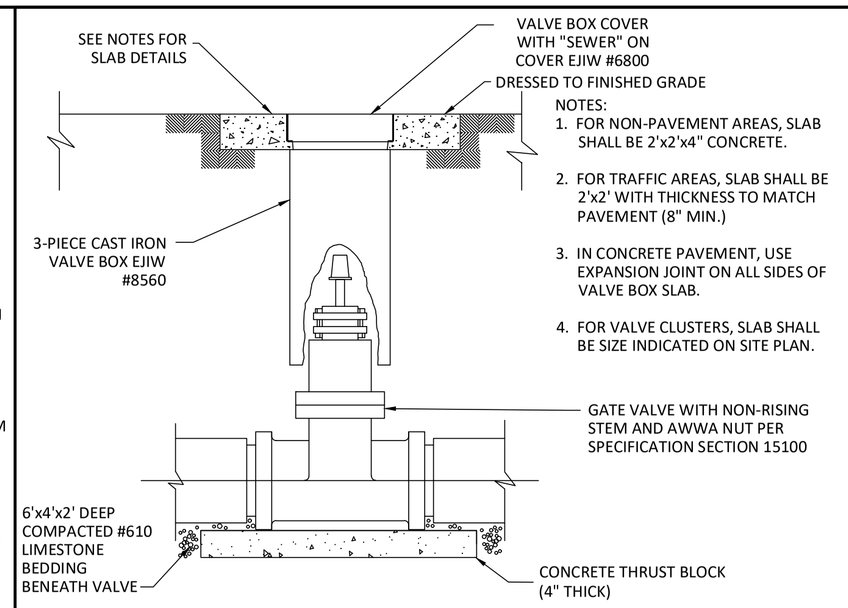

NOTES:
1. FOR NON-PAVEMENT AREAS, SLAB SHALL BE 2'x2'x4" CONCRETE.
2. FOR TRAFFIC AREAS, SLAB SHALL BE 2'x2' WITH THICKNESS TO MATCH PAVEMENT (8" MIN.)
3. IN CONCRETE PAVEMENT, USE EXPANSION JOINT ON ALL SIDES OF VALVE BOX SLAB.
4. FOR VALVE CLUSTERS, SLAB SHALL BE SIZE INDICATED ON SITE PLAN.

GATE VALVE AND VALVE BOX DETAIL C-8

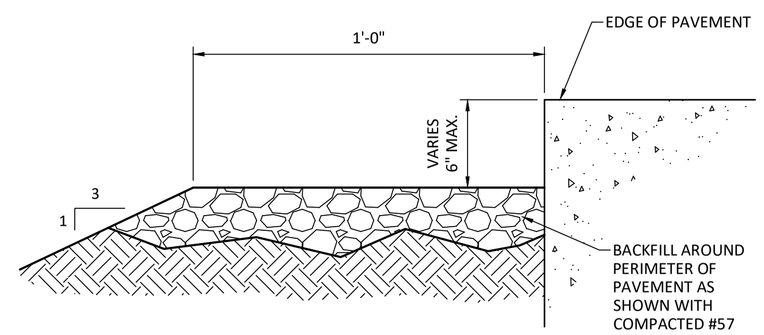

NOTE:
TYPICAL DETAIL TO BE USED WHERE NO GRADES ARE INDICATED ADJACENT TO PAVEMENT.

BACKFILL AROUND PAVEMENT C-9

ST. TAMMANY PARISH GOVERNMENT

DEPT. OF UTILITIES
ST. TAMMANY PARISH GOVERNMENT
620 N. TYLER STREET
COVINGTON, LA 70433

No.	DESCRIPTION OF REVISION	DATE:

DESIGNED BY:	GAL
DRAWN BY:	GAL
CHECKED BY:	KMD
SUBMITTED BY:	KYLE ASSOC.
PROJECT No.:	TU23000178
ISSUE DATE:	6/12/2024
APPROVED BY:	___
SHEET SIZE:	ANSI D
SCALE:	NTS

STATE OF LOUISIANA
KEVIN M. DRANE
License No. 35485
PROFESSIONAL ENGINEER
6/11/24

WEST ST TAMMANY REGIONAL STF
INFLUENT PUMP STATION
COVINGTON, LOUISIANA
PROJECT No.: TU 23000178

CIVIL DETAILS – I

SHEET NO.
GC–1

Plot Date: Tuesday, July 9, 2024 1:55:19 PM
User: Kevin Drane
File:N:\2023\23033 - West St Tammany Regional Sewer Treatment Facility\Drawings\Civil\23033-GC-01.dwg

Plot Date: Tuesday, July 9, 2024 1:55:48 PM
User: Kevin Drane

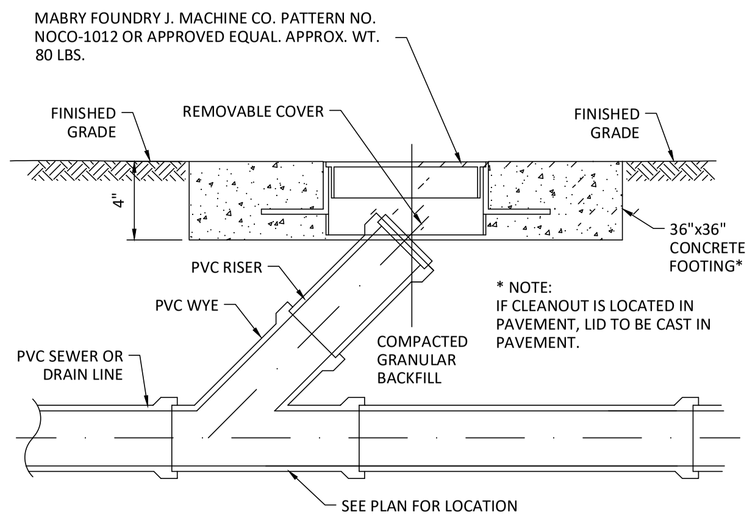

TYPICAL CLEANOUT DETAIL C-10

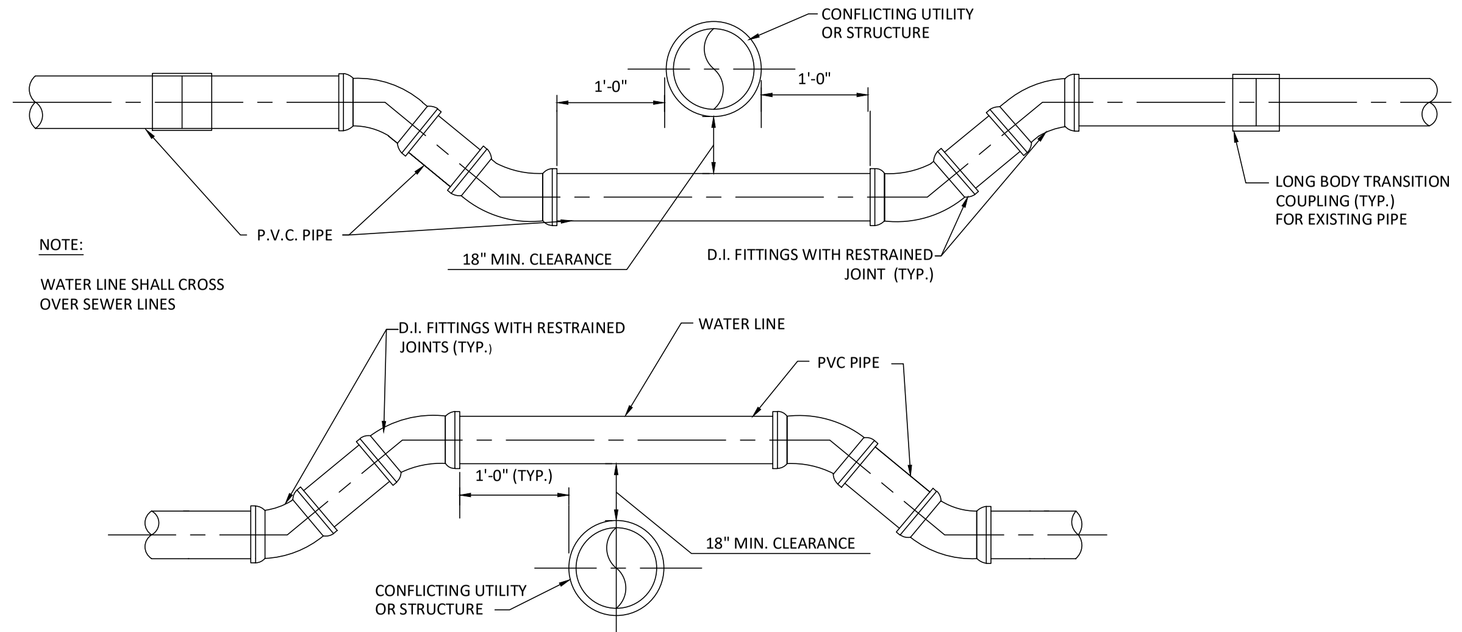

TYPICAL VERTICAL OFFSET FOR UTILITY CONFLICTS C-11

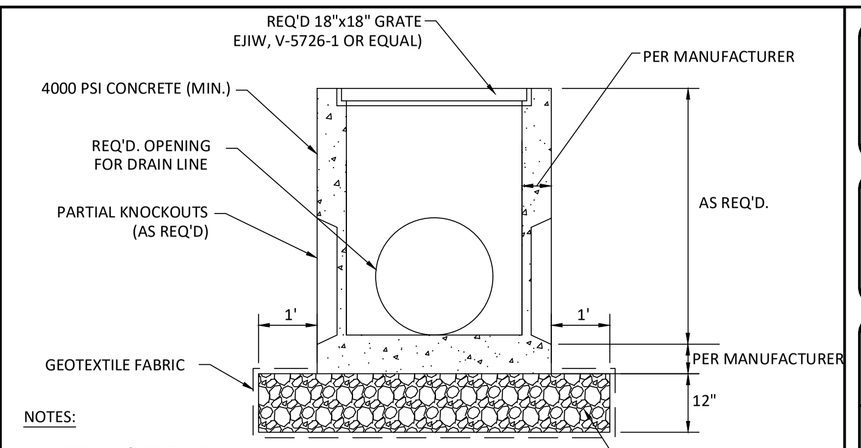

NOTES:

1. MATERIALS & FEATURES
   - CONCRETE: 4,000 PSI IN 28 DAYS.
   - REINFORCING STEEL: PER ASTM A-615, GRADE 60.
   - REINFORCING TO MEET AASHTO HS 20-44 LOADING.
   - PRECAST STRUCTURE TO MEET ASTM C-857-92
   - JOINT SEALANT: RAM-NEK GASKET MATERIAL.

2. PRE-CAST CATCH BASINS SHALL BE AS MANUFACTURED BY HANSON, GAINEY OR EQUAL. CONTRACTOR SHALL PROVIDE SHOP DRAWINGS FOR EACH STRUCTURE WITH ALL DIMENSIONS, ELEVATIONS, PIPE SIZES/ORIENTATIONS, ETC. SHOWN FOR REVIEW BY THE ENGINEER.

3. CONTRACTOR SHALL USE 18" ROUND SOLID TOP MARKED "DRAIN" WITH FRAME IN ACCORDANCE WITH ASTM A-48, CLASS 30 FOR GRAY CASTINGS FOR REQUIRED DRAINAGE MANHOLE.

PRECAST CATCH BASIN C-12

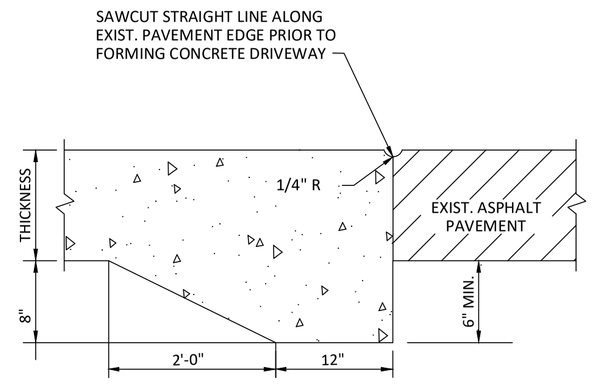

EXISTING PAVEMENT TIE-IN (ASPHALT) C-13

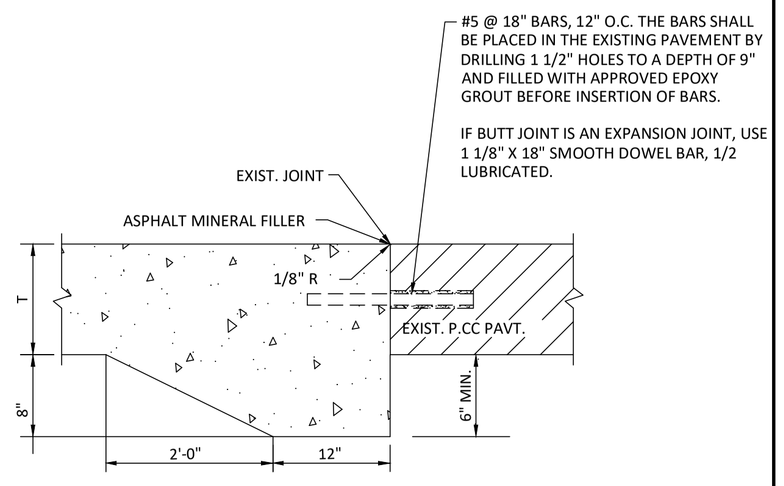

EXISTING PAVEMENT TIE-IN (CONCRETE) C-14

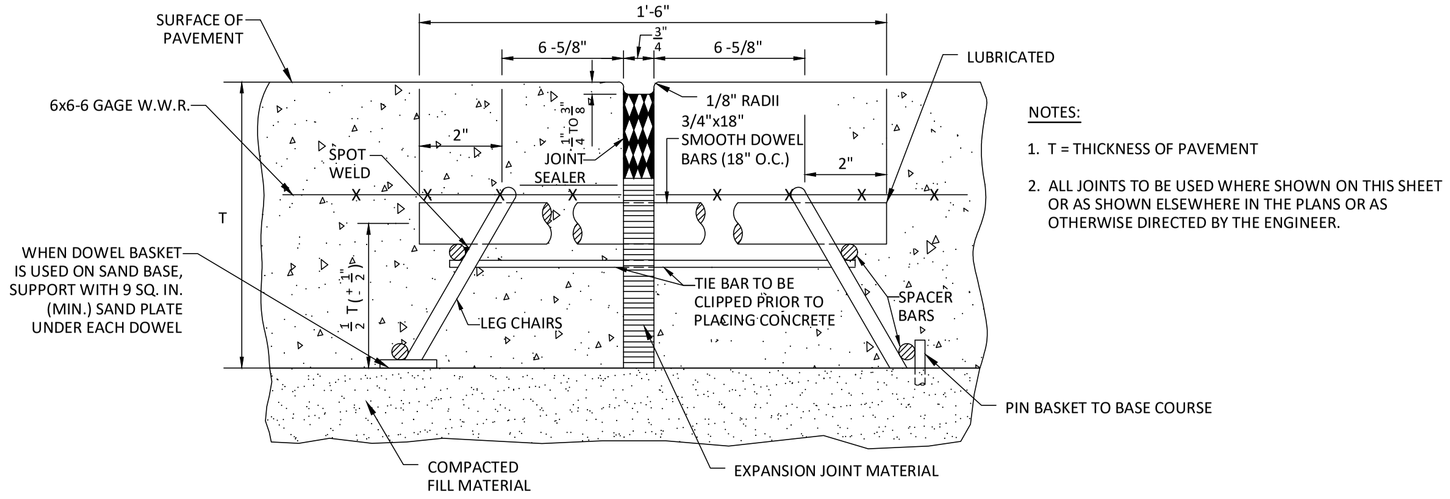

NOTES:

1. T = THICKNESS OF PAVEMENT
2. ALL JOINTS TO BE USED WHERE SHOWN ON THIS SHEET OR AS SHOWN ELSEWHERE IN THE PLANS OR AS OTHERWISE DIRECTED BY THE ENGINEER.

CONCRETE PAVEMENT TRANSVERSE EXPANSION JOINT C-15

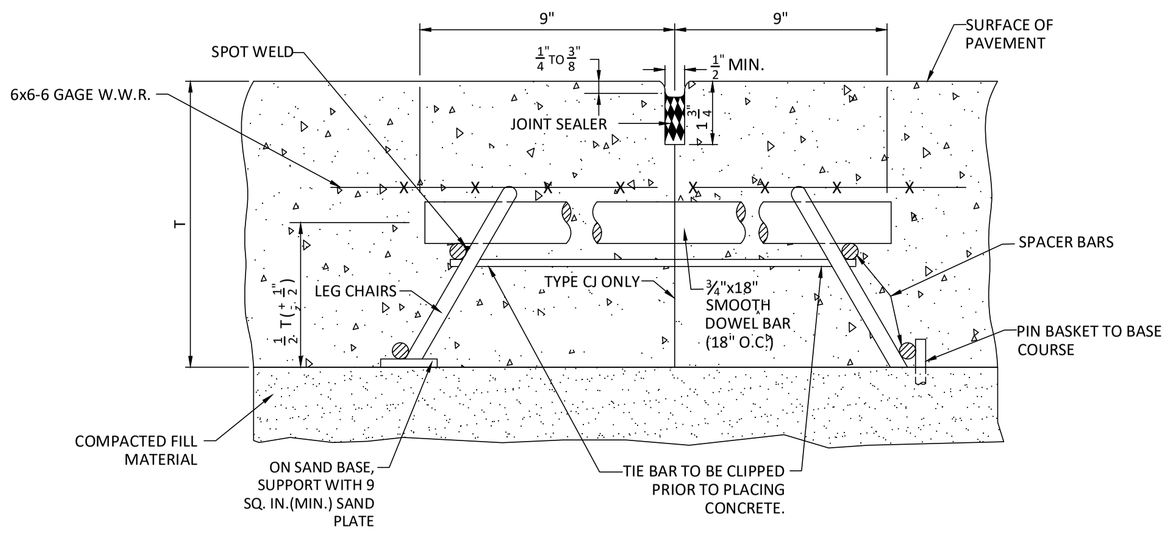

CONCRETE PAVEMENT TRANSVERSE DUMMY JOINT OR CONSTRUCTION JOINT C-16

T	A	B
5"	3/4"	1-1/4"
6"	1-1/4"	1-3/4"
7"	1-3/4"	2-1/4"

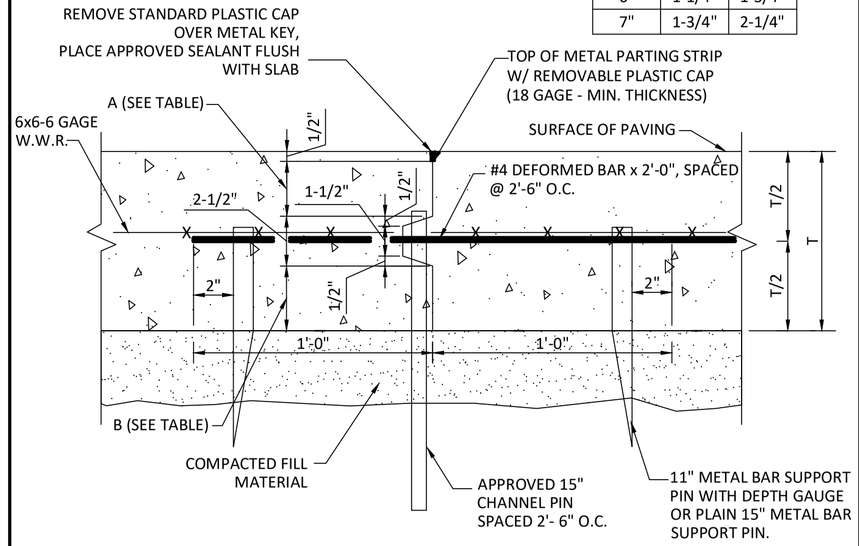

DEFORMED LONGITUDINAL JOINT C-17

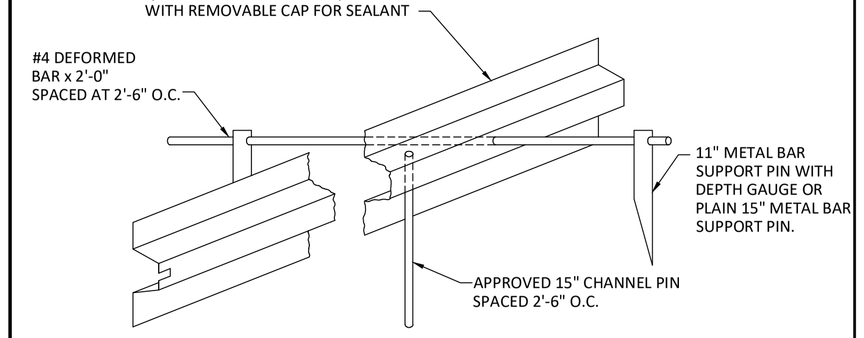

OBLIQUE VIEW METAL PARTING STRIP FOR LONGITUDINAL JOINT C-18

DEPT. OF UTILITIES
ST. TAMMANY PARISH GOVERNMENT
620 N. TYLER STREET
COVINGTON, LA 70433

No.	DESCRIPTION OF REVISION	DATE:

DESIGNED BY:	KMD
DRAWN BY:	GAL
CHECKED BY:	KMD
SUBMITTED BY:	KYLE ASSOC.
PROJECT No.:	TU23000178
ISSUE DATE:	6/12/2024
APPROVED BY:	---
SHEET SIZE:	ANSI D
SCALE:	NTS

STATE OF LOUISIANA
KEVIN M. DRANE
License No. 35495
6/13/24
PROFESSIONAL ENGINEER

WEST ST TAMMANY REGIONAL STF
INFLUENT PUMP STATION
COVINGTON, LOUISIANA
PROJECT No.: TU 23000178

CIVIL DETAILS – II

SHEET NO.
GC–2

File:N:\2023\23033 - West St Tammany Regional Sewer Treatment Facility\Drawings\Civil\23033-GC-02.dwg

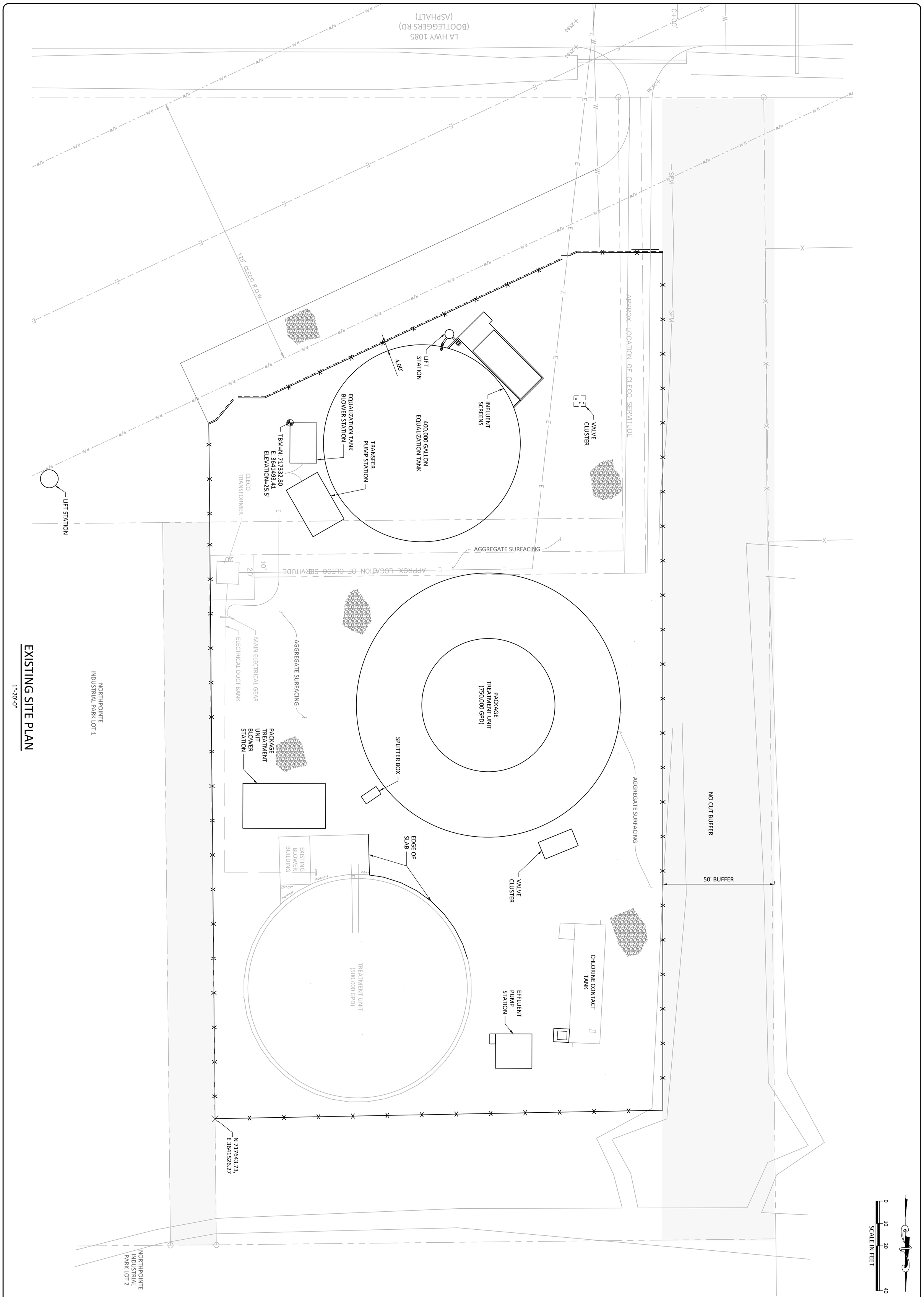

EXISTING SITE PLAN

1"-20'-0"

SHEET NO. C-1

WEST ST TAMMANY REGIONAL STF
INFLUENT PUMP STATION
COVINGTON, LOUISIANA
PROJECT No.: TU 23000178

EXISTING SITE PLAN

STATE OF LOUISIANA
KEVIN M. DRANE
License No. 35485
PROFESSIONAL ENGINEER

DESIGNED BY:	KMD
DRAWN BY:	GAL
CHECKED BY:	KMD
SUBMITTED BY:	KYLE ASSOC.
PROJECT No.:	TU23000178
ISSUE DATE:	6/12/2024
APPROVED BY:	---
SHEET SIZE:	ANSI D
SCALE:	1"=20'-0"

No.	DESCRIPTION OF REVISION	DATE:

DEPT. OF UTILITIES
ST. TAMMANY PARISH GOVERNMENT
620 N. TYLER STREET
COVINGTON, LA 70433

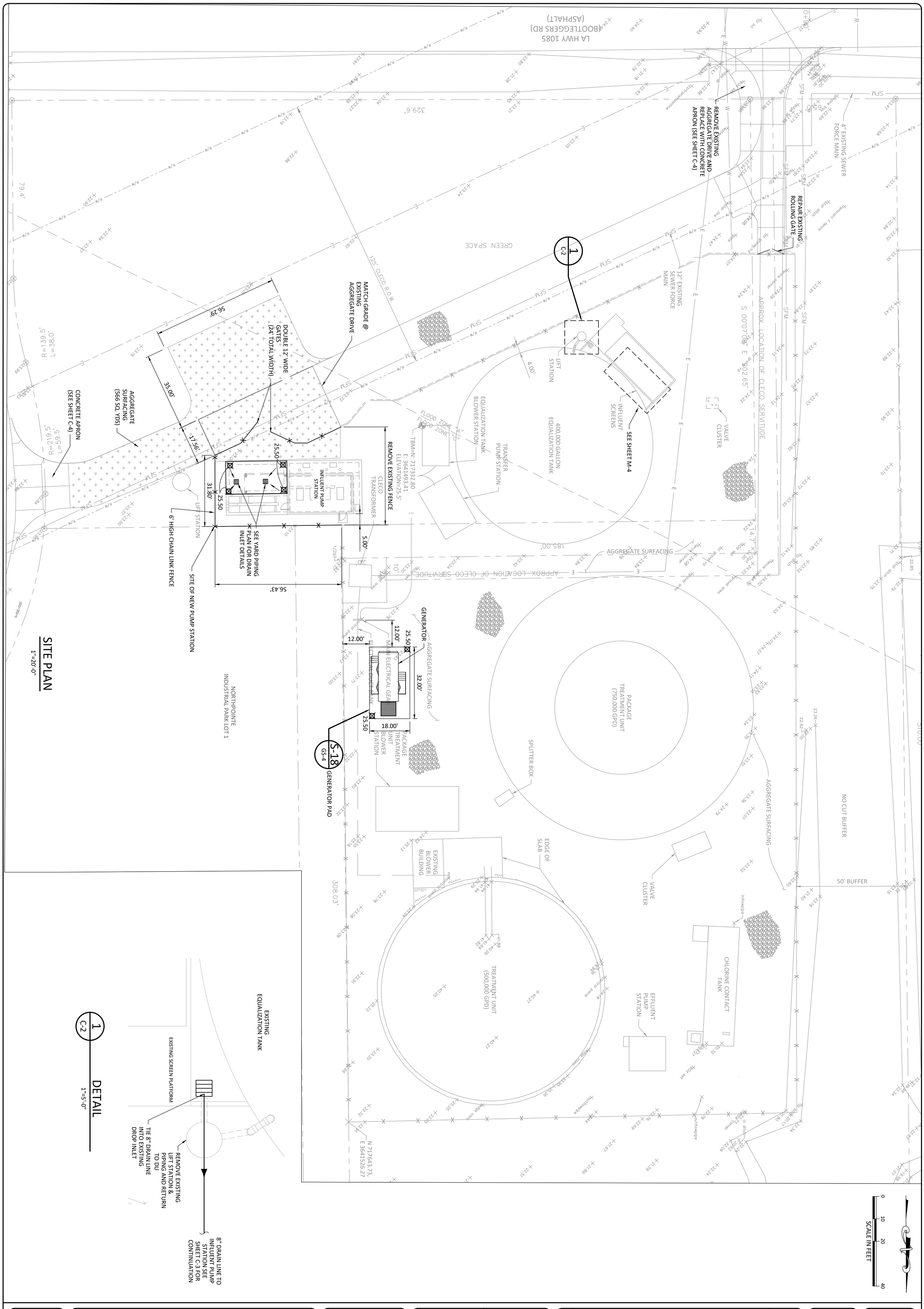

SITE PLAN

1"=20'-0"

DETAIL

1"=5'-0"

WEST ST TAMMANY REGIONAL STF INFLUENT PUMP STATION COVINGTON, LOUISIANA PROJECT No.: TU 23000178	SHEET NO. C-2
SITE PLAN	

KEVIN M. DRANE
License No. 35485
STATE OF LOUISIANA
PROFESSIONAL ENGINEER

DESIGNED BY:	KMD
DRAWN BY:	GAL
CHECKED BY:	KMD
SUBMITTED BY:	KYLE ASSOC.
PROJECT No.:	TU23000178
ISSUE DATE:	6/12/2024
APPROVED BY:	---
SHEET SIZE:	ANSI D
SCALE:	1"=20'-0"

No.	DESCRIPTION OF REVISION	DATE:

DEPT. OF UTILITIES
ST. TAMMANY PARISH GOVERNMENT
620 N. TYLER STREET
COVINGTON, LA 70433

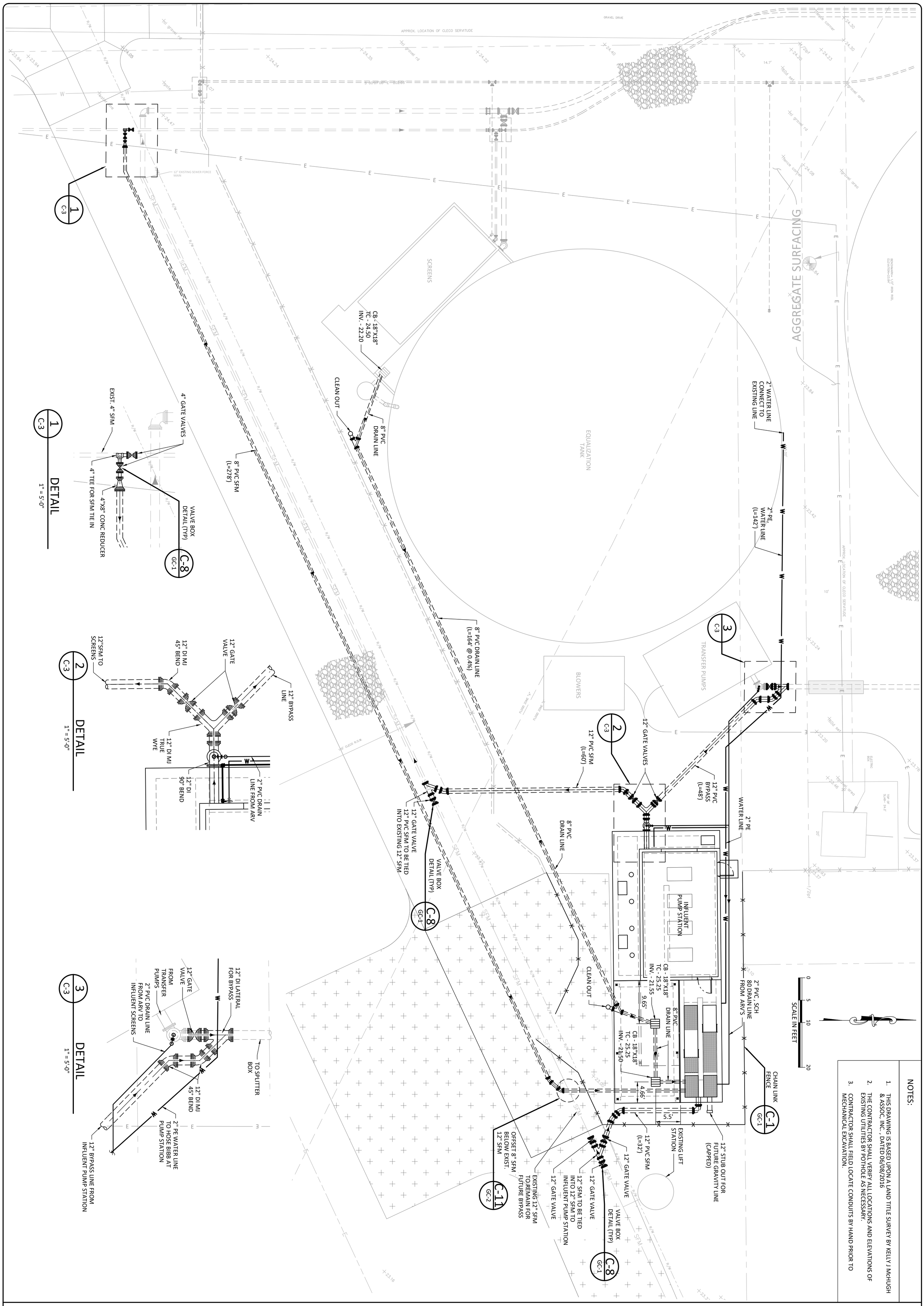

NOTES:

1. THIS DRAWING IS BASED UPON A LAND TITLE SURVEY BY KELLY J McHUGH & ASSOC, INC., DATED 06/08/2016
2. THE CONTRACTOR SHALL VERIFY ALL LOCATIONS AND ELEVATIONS OF EXISTING UTILITIES BY POTHOLE AS NECESSARY.
3. CONTRACTOR SHALL FIELD LOCATE CONDUITS BY HAND PRIOR TO MECHANICAL EXCAVATION.

DESIGNED BY:	KMD
DRAWN BY:	GAL
CHECKED BY:	KMD
SUBMITTED BY:	KYLE ASSOC.
PROJECT No.:	TU23000178
ISSUE DATE:	6/12/2024
APPROVED BY:	---
SHEET SIZE:	ANSI D
SCALE:	1"=10'-0"

No.	DESCRIPTION OF REVISION	DATE:

DEPT. OF UTILITIES
ST. TAMMANY PARISH GOVERNMENT
620 N. TYLER STREET
COVINGTON, LA 70433

WEST ST TAMMANY REGIONAL STF
INFLUENT PUMP STATION
COVINGTON, LOUISIANA
PROJECT No.: TU 23000178

YARD PIPING PLAN

SHEET NO. C-3

STATE OF LOUISIANA — KEVIN M. DRANE — License No. 35485 — PROFESSIONAL ENGINEER

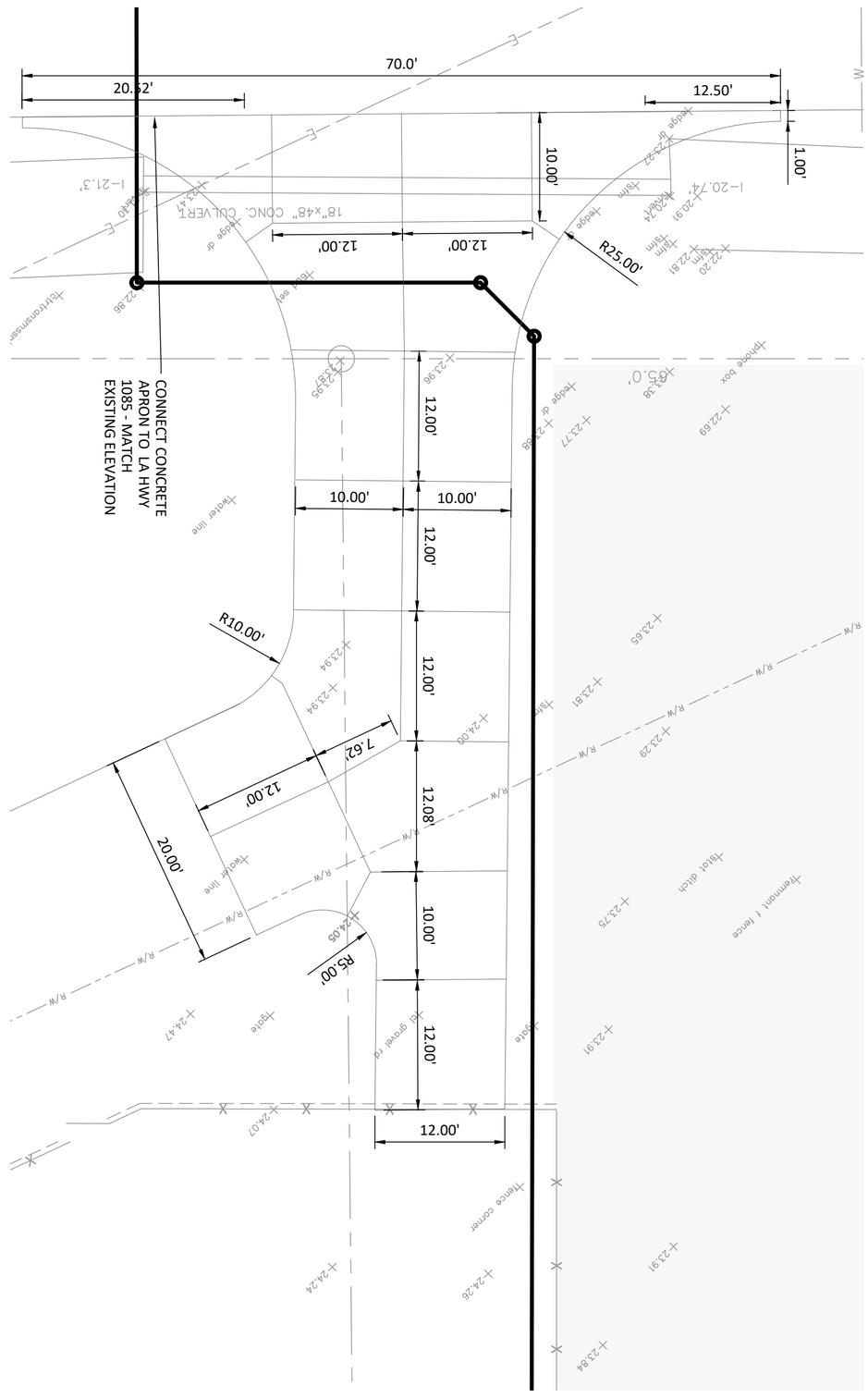

DRIVEWAY @ LA 1085

1"=10'-0"

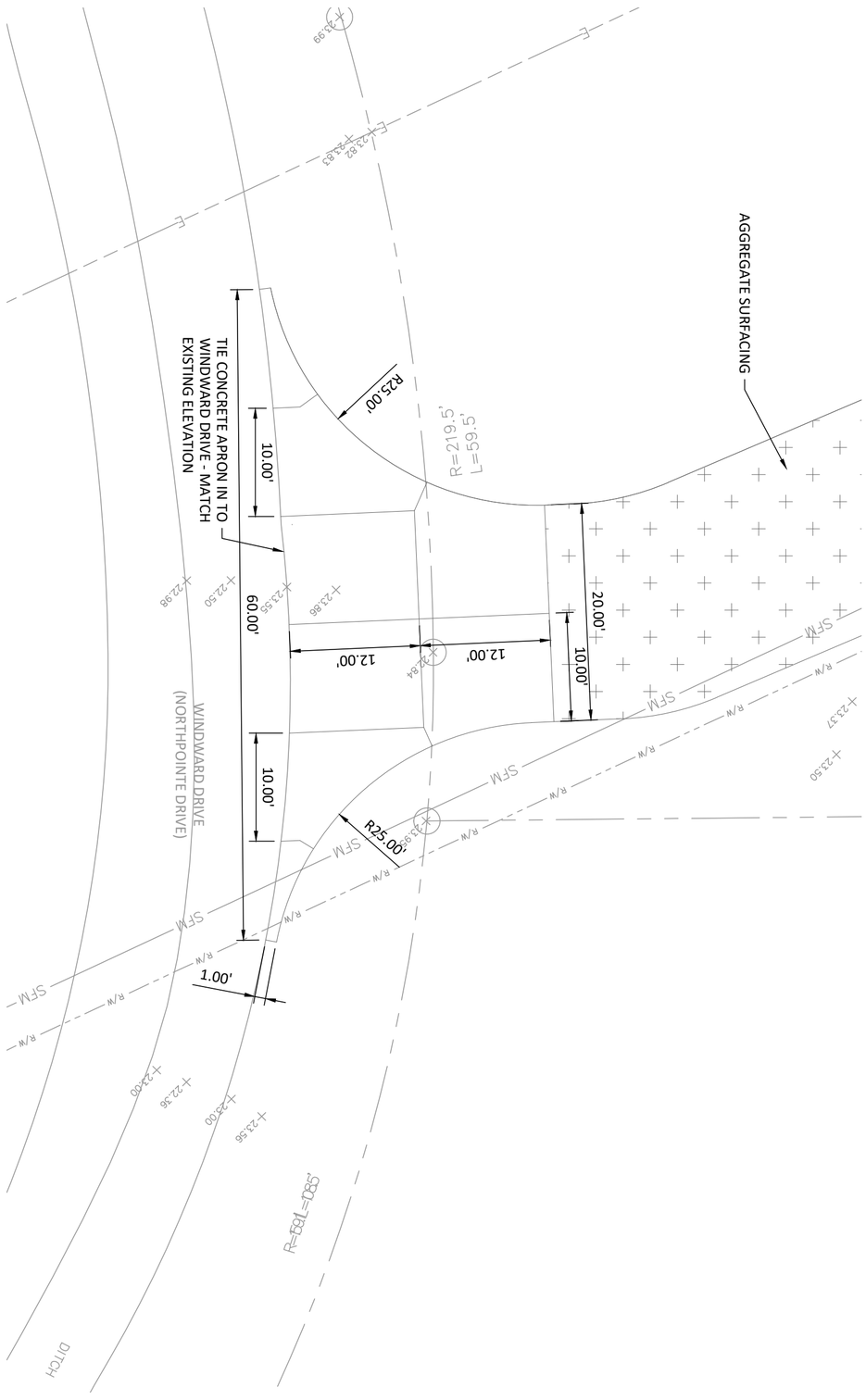

DRIVEWAY @ WINDWARD DRIVE

1"=10'-0"

0 5 10 20

SHEET NO. C-4

WEST ST TAMMANY REGIONAL STF
INFLUENT PUMP STATION
COVINGTON, LOUISIANA
PROJECT No.: TU 23000178

PAVING PLAN

STATE OF LOUISIANA
KEVIN M. DRANE
License No. 35485
PROFESSIONAL ENGINEER

DESIGNED BY:	KMD
DRAWN BY:	GAL
CHECKED BY:	KMD
SUBMITTED BY:	KYLE ASSOC.
PROJECT No.:	TU23000178
ISSUE DATE:	6/12/2024
APPROVED BY:	---
SHEET SIZE:	ANSI D
SCALE:	1"=20'-0"

No.	DESCRIPTION OF REVISION	DATE:

DEPT. OF UTILITIES
ST. TAMMANY PARISH GOVERNMENT
620 N. TYLER STREET
COVINGTON, LA 70433

Plot Date: Tuesday, July 9, 2024 2:37:00 PM
User: Kevin Drane
File:N:\2023\23033 - West St Tammany Regional Sewer Treatment Facility\Drawings\Mechanical\23033-GM1.dwg

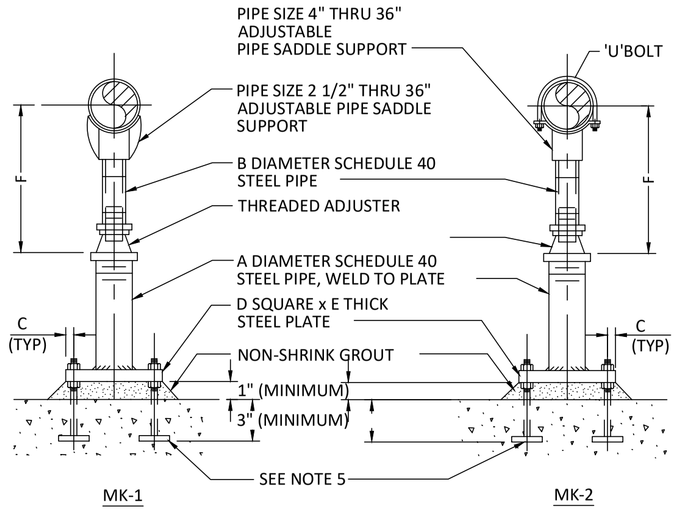

DIMENSIONS IN INCHES							
NOMINAL PIPE SIZE	A	B	C	D	E	F (APPROX) (MINIMUM)	F (APPROX) (MAXIMUM)
2 1/2	2	1 1/2	1	6	3/8	7	11 1/2
3	2	1 1/2	1	6	3/8	7 5/16	11 13/16
3 1/2	2	1 1/2	1	6	3/8	7 9/16	12 1/16
4	3	* 2 1/2 / 3	1 1/8	7 1/2	1/2	10 1/4	14 3/4
6	3	* 2 1/2 / 3	1 1/8	7 1/2	1/2	11 9/16	16 1/16
8	3	* 2 1/2 / 3	1 1/8	7 1/2	1/2	13 9/16	18 1/16
10	3	* 2 1/2 / 3	1 1/8	7 1/2	1/2	14 5/8	19 1/8
12	3	* 2 1/2 / 3	1 1/8	7 1/2	1/2	15 5/8	20 1/8
14	4	3	1 1/4	9	5/8	18 7/8	23 3/8
16	4	3	1 1/4	9	5/8	19 7/8	24 3/8
18	6	4	1 1/2	11	3/4	22 1/4	26 3/4
20	6	4	1 1/2	11	3/4	23 1/4	27 3/4
24	6	4	1 1/2	11	3/4	26 1/2	31
30	6	4	1 1/2	11	3/4	29 5/8	34 1/8
32	6	4	1 1/2	11	3/4	30 5/8	35 1/8
36	6	4	1 1/2	11	3/4	32 5/8	37 1/8

* SEE MANUFACTURER

NOTES:

1. PIPE SUPPORTS SHALL BE FLANGE STYLE OR SADDLE STYLE ADJUSTABLE PIPE SUPPORTS BY TRUMBULL MANUFACTURING OR APPROVED EQUAL.
2. SUPPORTS SHALL BE 304 STAINLESS STEEL.
3. WHERE PIPE SUPPORT OCCURS ON GRADE REFER TO STRUCTURAL DRAWINGS FOR DETAILS.
4. THIS PIPE SUPPORT IS LIMITED TO PIPE FROM 2 1/2" DIAMETER TO 36" DIAMETER INCLUSIVE.
5. ANCHOR BOLT OR CONCRETE ANCHOR WITH TWO NUTS AND ONE LOCKWASHER. PROVIDE BAR 4 x 1/2" x 4" WELDED TO BOLT (TYP OF 4).

ADJUSTABLE PIPE SUPPORT WITH OR WITHOUT 'U' BOLT (FOR PIPE 36" DIAMETER AND SMALLER) — M-1

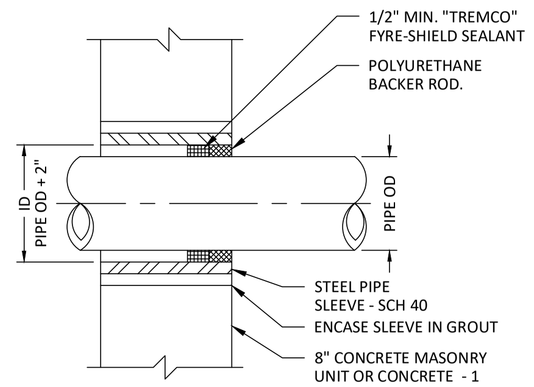

BLOCK WALL PENETRATION — M-2

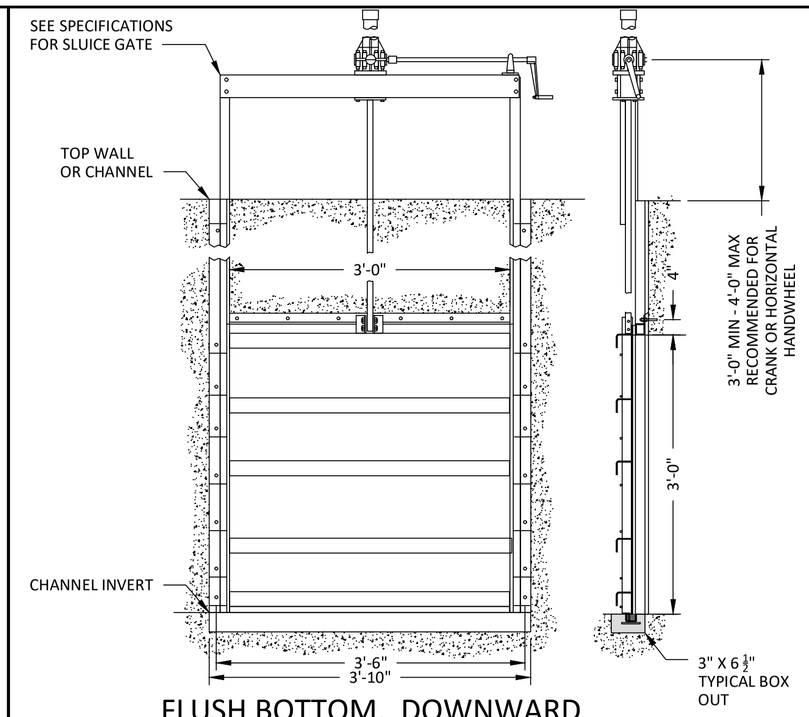

FLUSH BOTTOM, DOWNWARD CLOSING SLUICE GATE DETAIL — M-2A

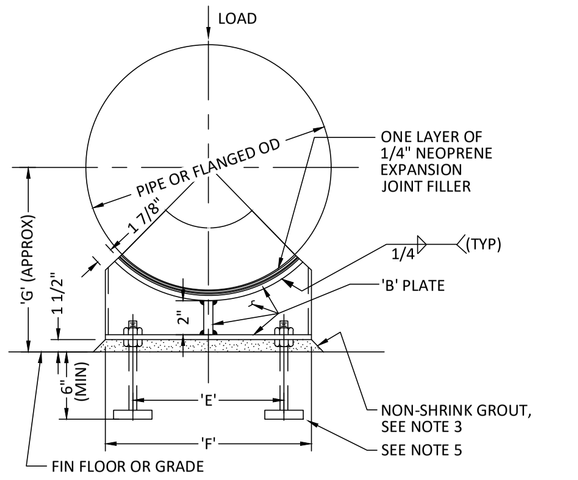

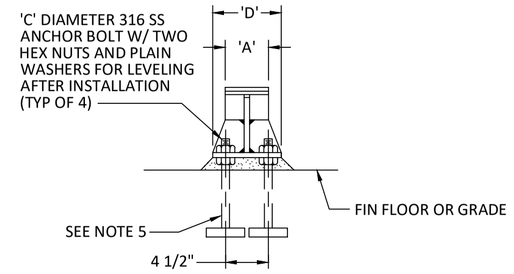

DIMENSIONS IN INCHES										
NOMINAL PIPE SIZE					SUPPORTING PIPE			SUPPORTING FLANGE		
	A	B	C	D	E	F	G	E	F	G
8	4	3/8	5/8	6	5	8	11	7 1/2	9	16
12	4	3/8	5/8	6	7	11	12	10	15	20

NOTES:

1. WHEN SUPPORTING PIPE AND FLANGE ALTERNATELY ON THE SAME LINE, CONCRETE PIERS FOR PIPE SUPPORTS SHALL ALL HAVE THE SAME DIMENSION 'G' FOR FLANGE SUPPORT.
2. PIPE SUPPORTS SHALL BE LOCATED IN PLAN AT POINTS MARKED THUS: (X)
3. WHERE DIFFERENTIAL SETTLEMENT IS LIKELY TO OCCUR, OMIT GROUT AS DIRECTED BY THE ENGINEER.
4. HOT DIP GALVANIZE ALL PARTS AFTER FABRICATION.
5. ANCHOR BOLT OR CONCRETE ANCHOR WITH TWO NUTS AND ONE LOCKWASHER. PROVIDE BAR 4x1/2x4" WELDED TO BOLT. (TYP OF 4) SEE SPECIFICATIONS.

PIPE SUPPORT — M-3

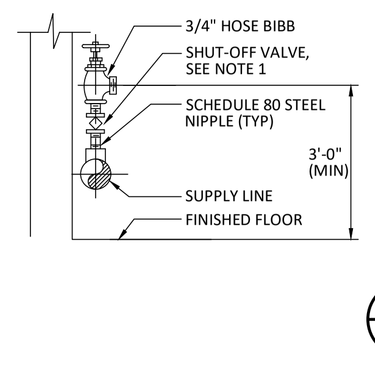

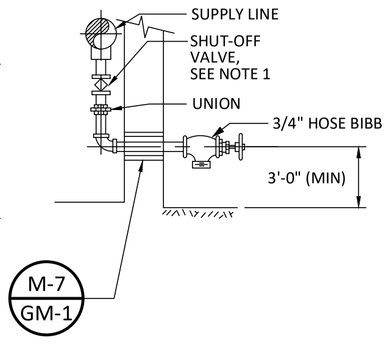

M-7 / GM-1

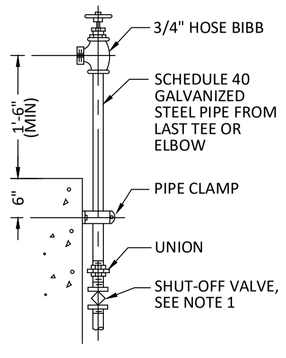

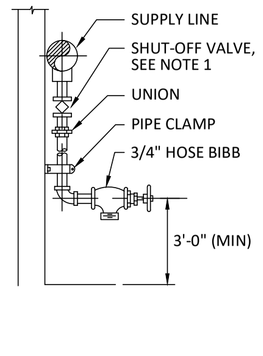

NOTES:

1. ALL HOSE BIBBS SHALL BE CONTROLLED BY INDIVIDUAL SHUT-OFF VALVES (BALL VALVES) EXCEPT WHERE INDIVIDUALLY CONTROLLED BRANCH MAIN SERVES HOSE VALVES ONLY.
2. FOR LOCATION SEE DRAWINGS.
3. PROVIDE WARNING FOR NON-POTABLE WATER.
4. FOR INSTALLATION IN PRE-ENGINEERED BUILDINGS, SUPPORT PIPE AS SHOW IN DETAIL M-5, OR SUPPORT DIRECTLY TO BUILDING FRAMING.
5. HOSE BIBBS AND EXPOSED PIPING SHALL BE INSULATED TO PROTECT AGAINST FREEZING.
6. HOSE BIBBS SHALL BE PROTECTED FROM BACK SIPHONING BY USE OF A VACUUM BREAKER

HOSE BIBBS — M-4

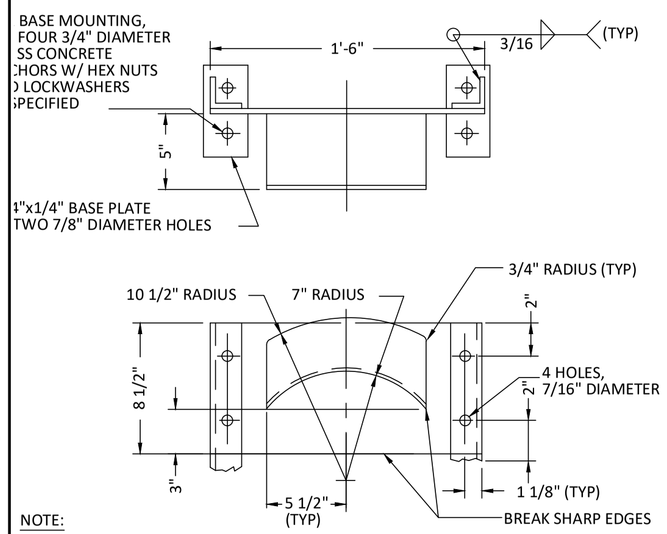

NOTE:

1. WHERE HOSE RACK IS FREE-STANDING, PROVIDE TWO STEEL ANGLES 2x2x1/4 W/BASE PLATES.
2. ALL WELDED CONSTRUCTION. 8 GAUGE STEEL SHEET SHOP HOT DIP GALVANIZED AFTER FABRICATION. SHOP PRIMED AND FINISHED COATED IN THE FIELD.

HOSE RACK — M-5

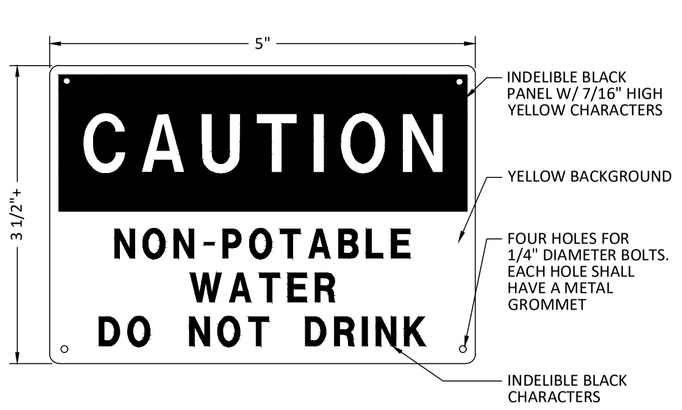

NOTES:

1. MATERIAL TO BE SEMI-RIGID BUTYRATE OR EQUAL.
2. COLORS AND LETTER SIZE TO BE PER OSHA STANDARDS FOR CAUTION SIGNS.
3. PROVIDE THIS SIGN AT ALL HOSE BIBB LOCATIONS WHERE WATER IS NON-POTABLE.

WARNING SIGN FOR NON-POTABLE WATER — M-6

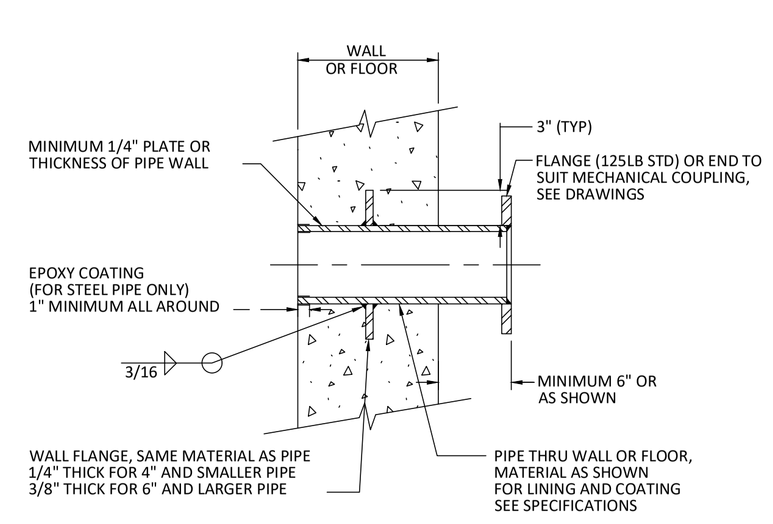

FABRICATED PIPE THIMBLE — M-7

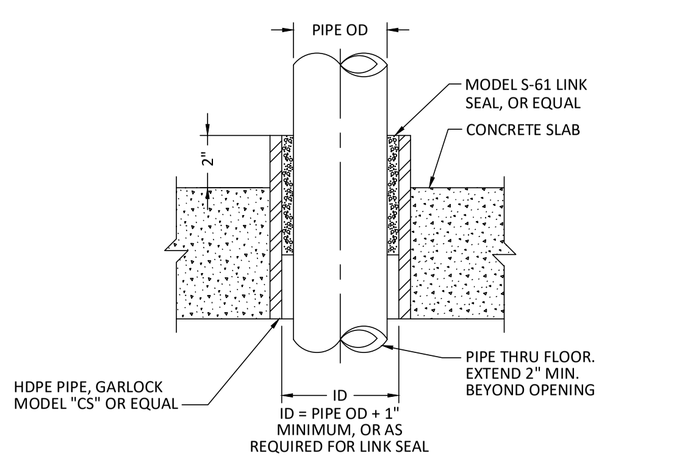

FLOOR PIPE SLEEVE — M-8

DEPT. OF UTILITIES
ST. TAMMANY PARISH GOVERNMENT
620 N. TYLER STREET
COVINGTON, LA 70433

No.	DESCRIPTION OF REVISION	DATE:

DESIGNED BY:	KMD
DRAWN BY:	GAL
CHECKED BY:	KMD
SUBMITTED BY:	KYLE ASSOC.
PROJECT No.:	TU23000178
ISSUE DATE:	6/12/2024
APPROVED BY:	— —
SHEET SIZE:	ANSI D
SCALE:	NTS

WEST ST TAMMANY REGIONAL STF
INFLUENT PUMP STATION
COVINGTON, LOUISIANA
PROJECT No.: TU 23000178

PROCESS MECHANICAL DETAILS — I

SHEET NO.
GM—1

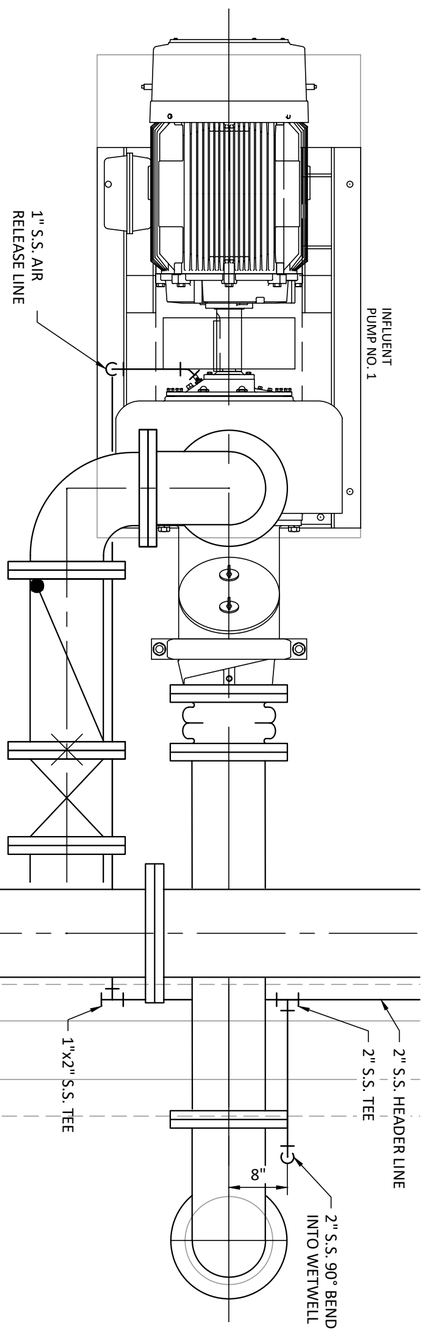

1 M-1

DETAIL

3/4" = 1'-0"

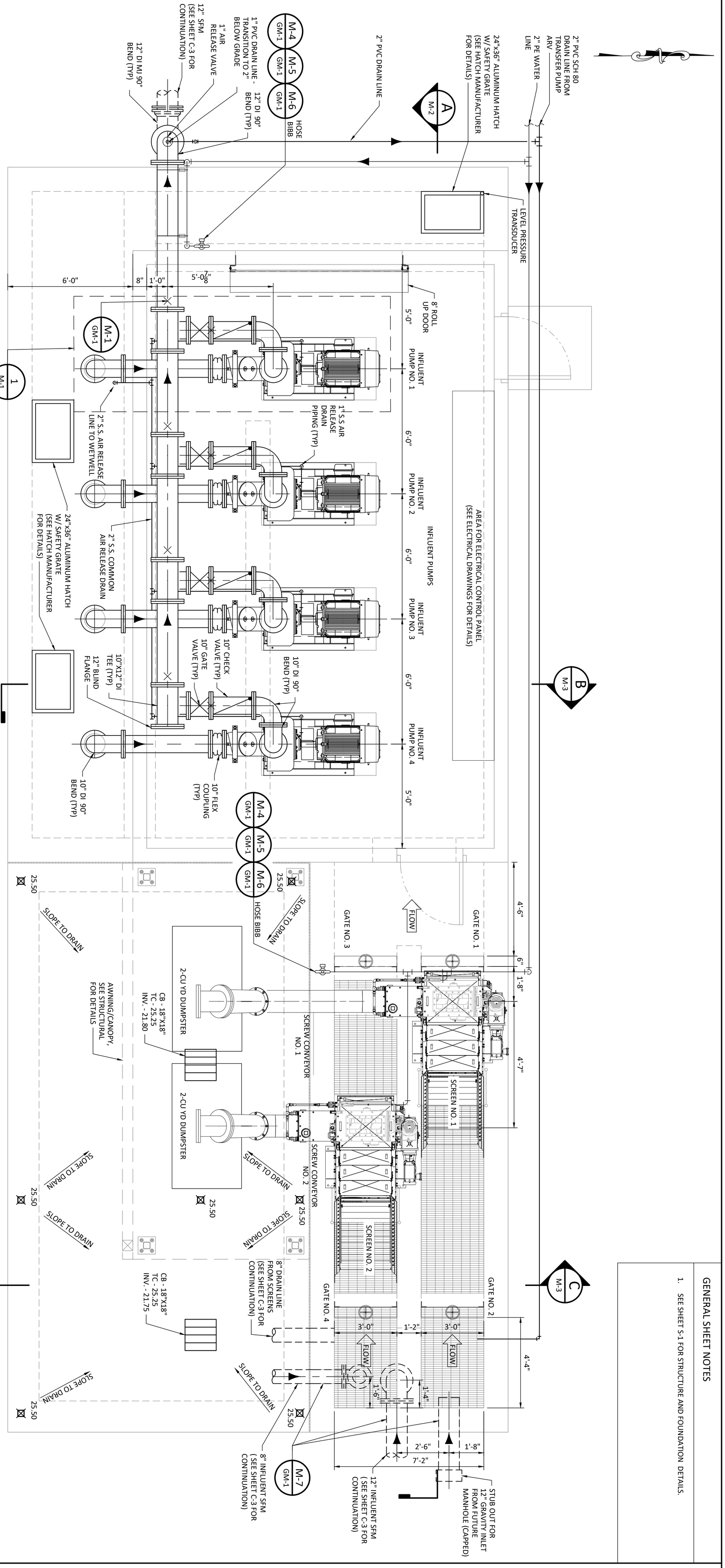

PLAN

3/8" = 1'-0"

GENERAL SHEET NOTES

1. SEE SHEET S-1 FOR STRUCTURE AND FOUNDATION DETAILS.

SHEET NO. M-1

WEST ST TAMMANY REGIONAL STF
INFLUENT PUMP STATION
COVINGTON, LOUISIANA
PROJECT No.: TU 23000178

INFLUENT PUMP STATION – PLAN

STATE OF LOUISIANA — KEVIN M. DRANE — License No. 35485 — PROFESSIONAL ENGINEER

DESIGNED BY:	KMD
DRAWN BY:	GAL
CHECKED BY:	KMD
SUBMITTED BY:	KYLE ASSOC.
PROJECT No.:	TU23000178
ISSUE DATE:	6/12/2024
APPROVED BY:	---
SHEET SIZE:	ANSI D
SCALE:	3/8"=1'-0"

No.	DESCRIPTION OF REVISION	DATE:

DEPT. OF UTILITIES
ST. TAMMANY PARISH GOVERNMENT
620 N. TYLER STREET
COVINGTON, LA 70433

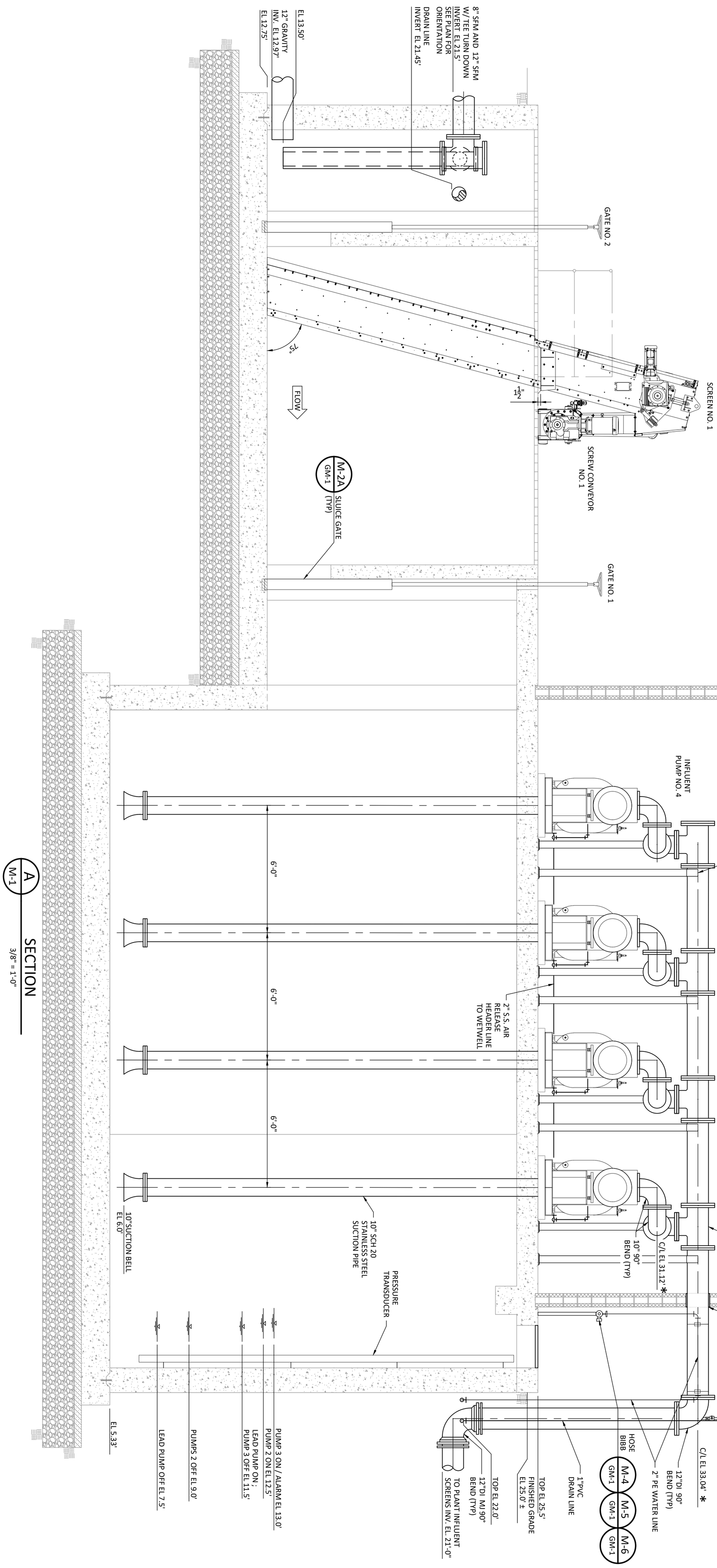

A
M-1

SECTION

3/8" = 1'-0"

GENERAL SHEET NOTES

1. SEE STRUCTURAL DRAWINGS FOR STRUCTURE AND FOUNDATION DETAILS.
2. CONTRACTOR SHALL VERIFY DIMENSIONS INDICATED AS "*" WITH EQUIPMENT SUPPLIER BEFORE EQUIPMENT SUBMITTAL.

DEPT. OF UTILITIES
ST. TAMMANY PARISH GOVERNMENT
620 N. TYLER STREET
COVINGTON, LA 70433

No.	DESCRIPTION OF REVISION	DATE:

DESIGNED BY:	KMD
DRAWN BY:	GAL
CHECKED BY:	KMD
SUBMITTED BY:	KYLE ASSOC.
PROJECT No.:	TU23000178
ISSUE DATE:	6/12/2024
APPROVED BY:	---
SHEET SIZE:	ANSI D
SCALE:	3/8"=1'-0"

STATE OF LOUISIANA
KEVIN M. DRANE
License No. 35485
PROFESSIONAL ENGINEER

WEST ST TAMMANY REGIONAL STF
INFLUENT PUMP STATION
COVINGTON, LOUISIANA
PROJECT No.: TU 23000178

INFLUENT PUMP STATION – SECTION

SHEET NO.
M-2

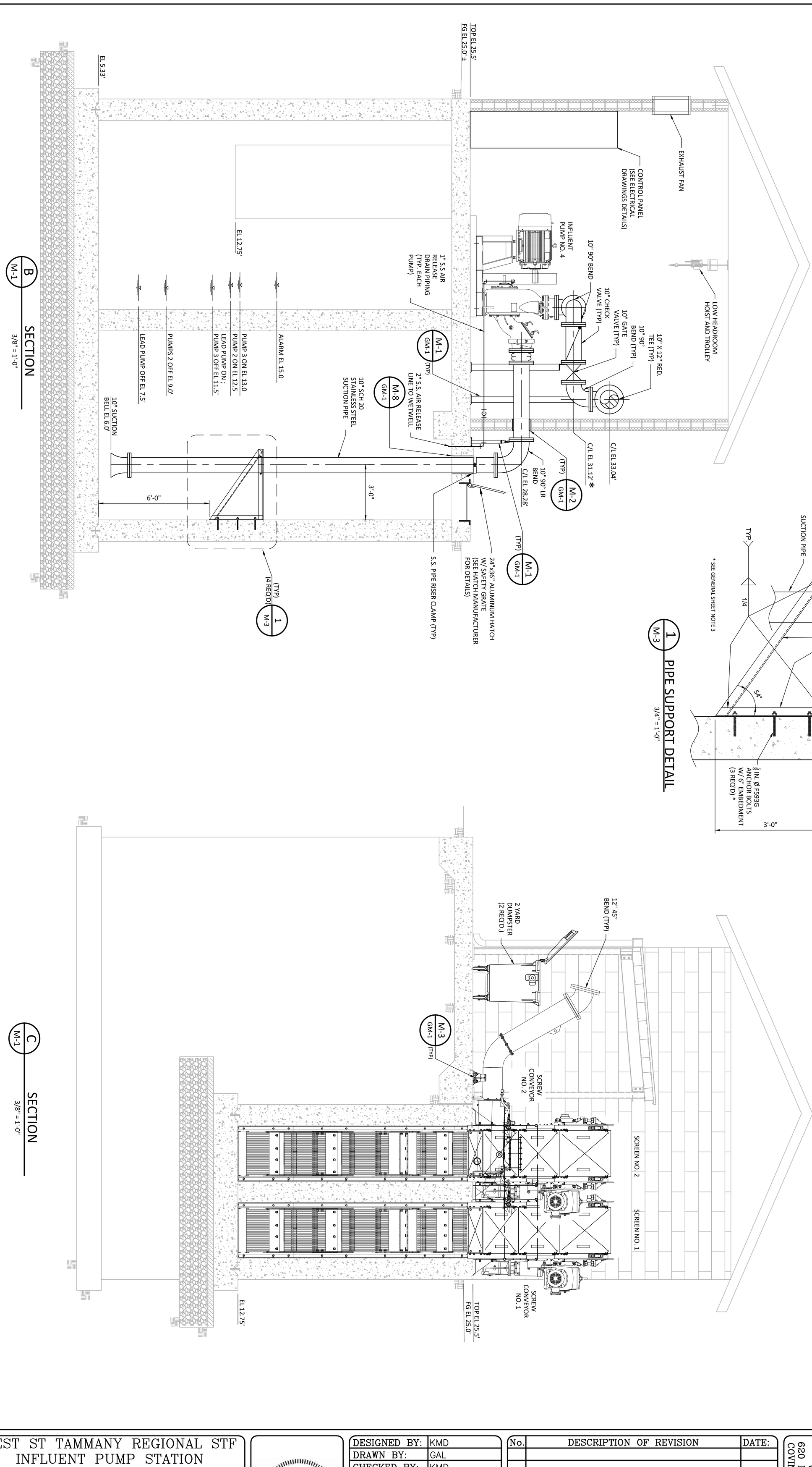

B / M-1 SECTION
3/8" = 1'-0"

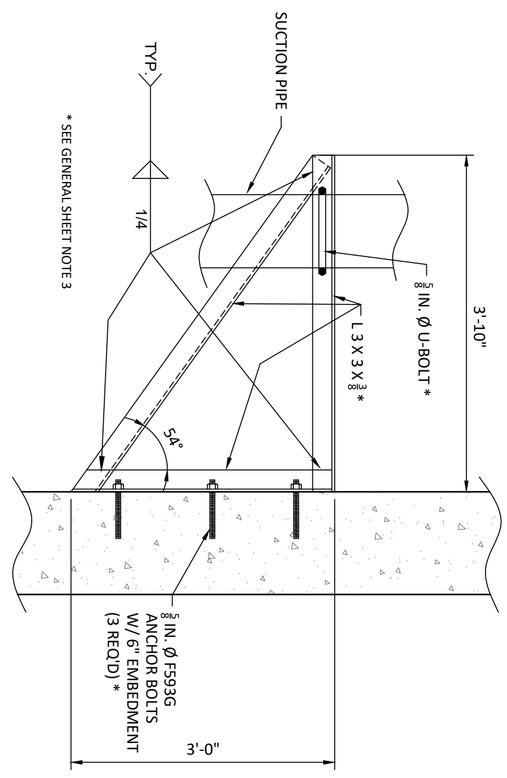

1 / M-3 PIPE SUPPORT DETAIL
3/4" = 1'-0"

C / M-1 SECTION
3/8" = 1'-0"

GENERAL SHEET NOTES

1. SEE SHEET S-1 FOR STRUCTURE AND FOUNDATION DETAILS.
2. CONTRACTOR SHALL VERIFY DIMENSIONS INDICATED AS "*" WITH EQUIPMENT SUPPLIER BEFORE EQUIPMENT SUBMITTAL.
3. PIPE SUPPORTS SHALL BE FABRICATED FROM 316 STAINLESS STEEL W/ 316 S.S. HARDWARE

DEPT. OF UTILITIES
ST. TAMMANY PARISH GOVERNMENT
620 N. TYLER STREET
COVINGTON, LA 70433

No.	DESCRIPTION OF REVISION	DATE:

DESIGNED BY:	KMD
DRAWN BY:	GAL
CHECKED BY:	KMD
SUBMITTED BY:	KYLE ASSOC.
PROJECT No.:	TU23000178
ISSUE DATE:	6/12/2024
APPROVED BY:	---
SHEET SIZE:	ANSI D
SCALE:	3/8"=1'-0"

STATE OF LOUISIANA — KEVIN M. DRANE — License No. 35485 — PROFESSIONAL ENGINEER

WEST ST TAMMANY REGIONAL STF
INFLUENT PUMP STATION
COVINGTON, LOUISIANA
PROJECT No.: TU 23000178

INFLUENT PUMP STATION – SECTION

SHEET NO.
M-3

File:N:\2023\23033 - West St Tammany Regional Sewer Treatment Facility\Drawings\Mechanical\23033-M4-SCRNS.dwg

User: Kevin Drane

Plot Date: Tuesday, July 9, 2024 2:38:53 PM

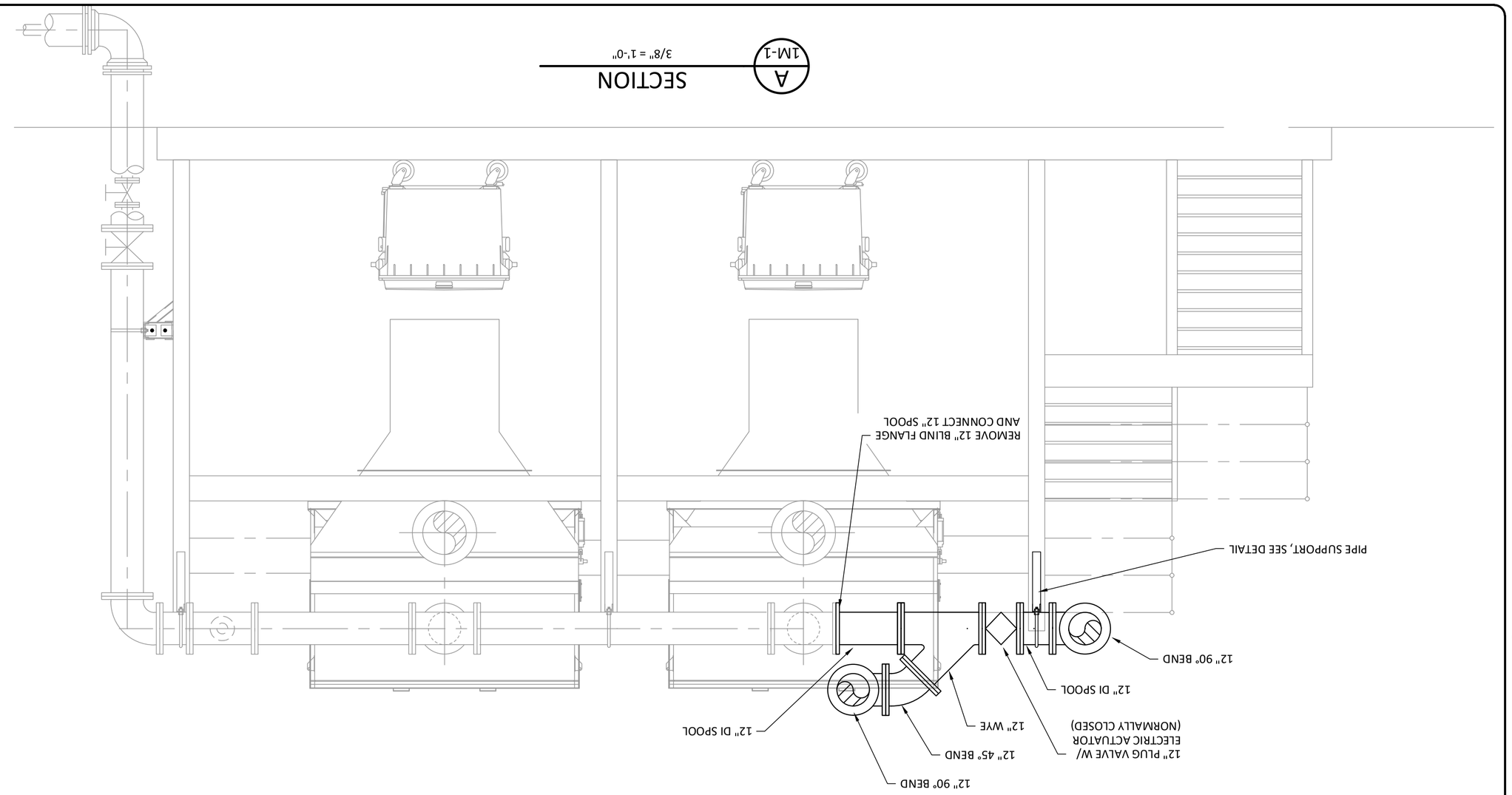

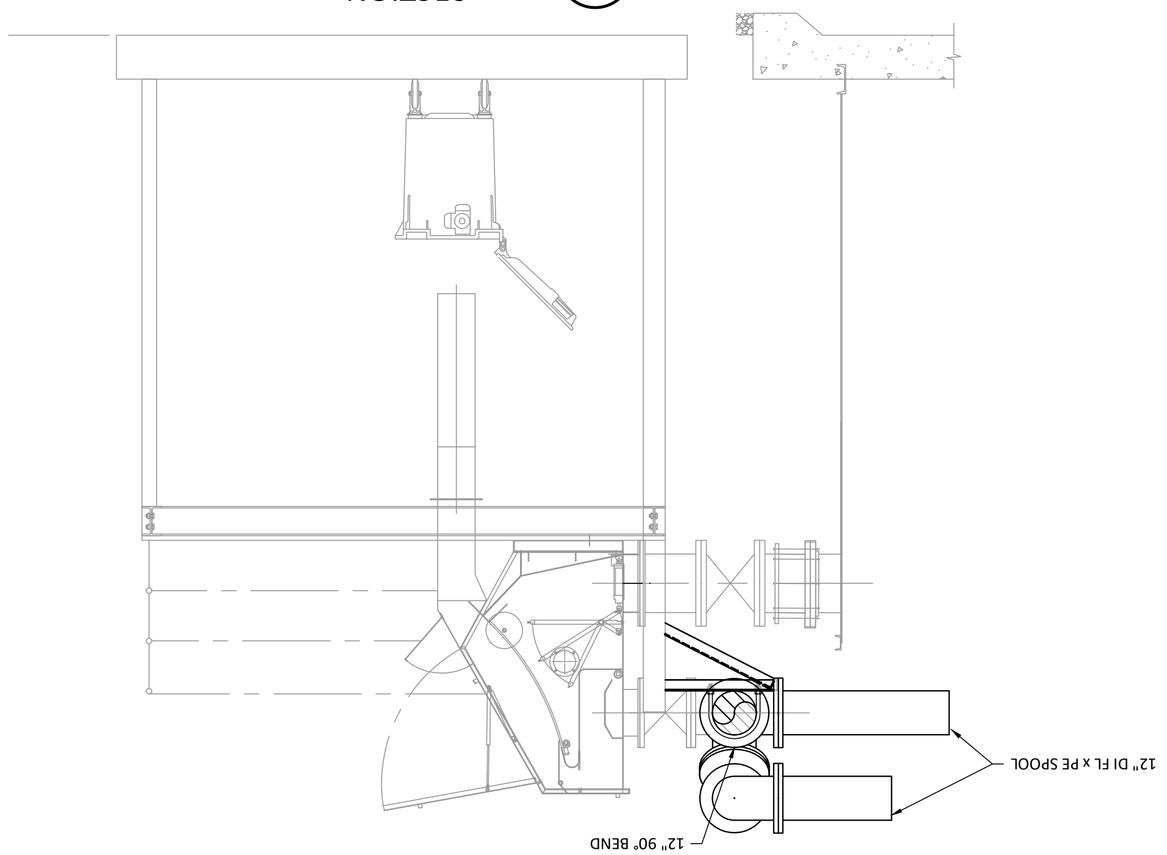

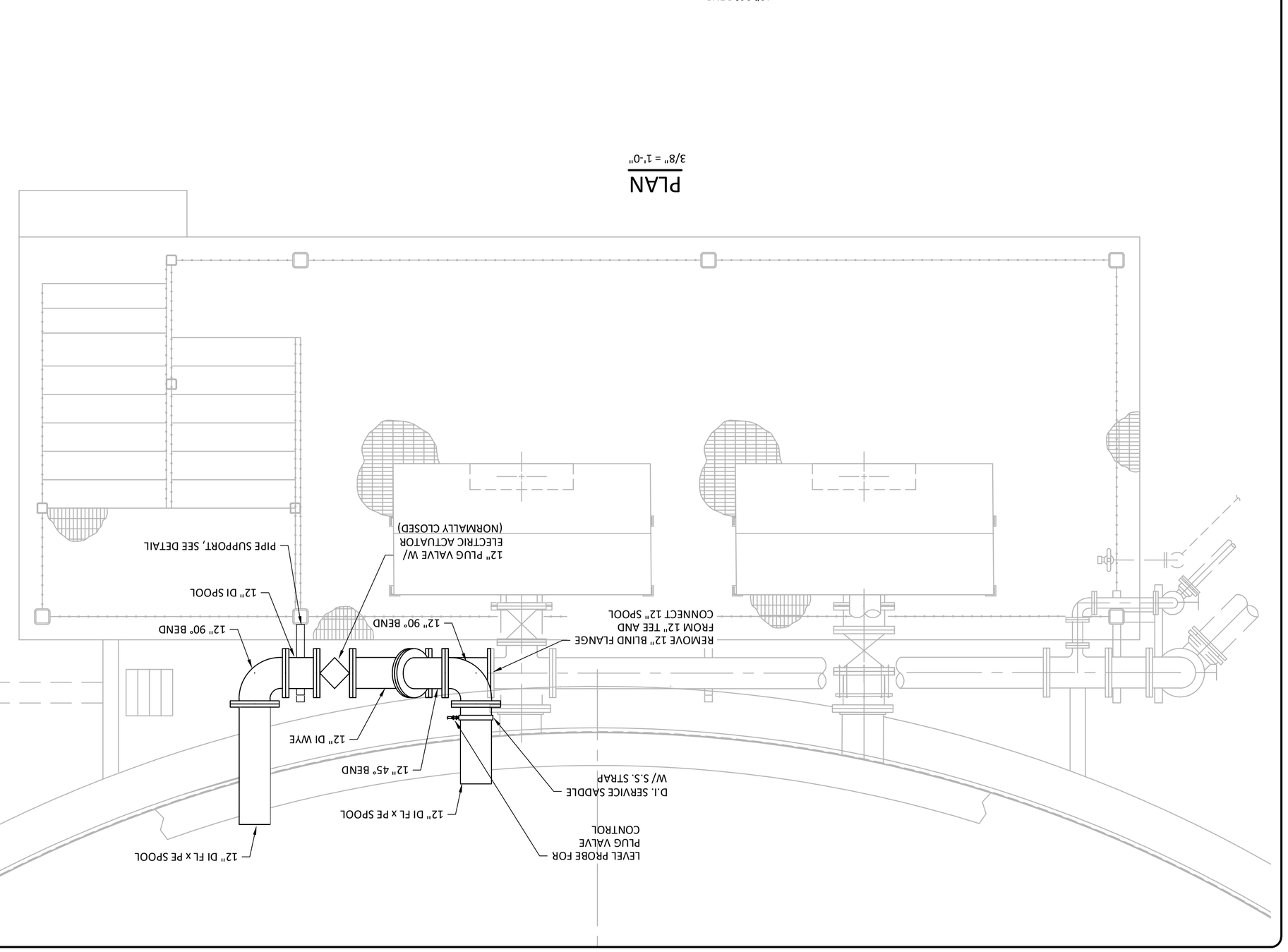

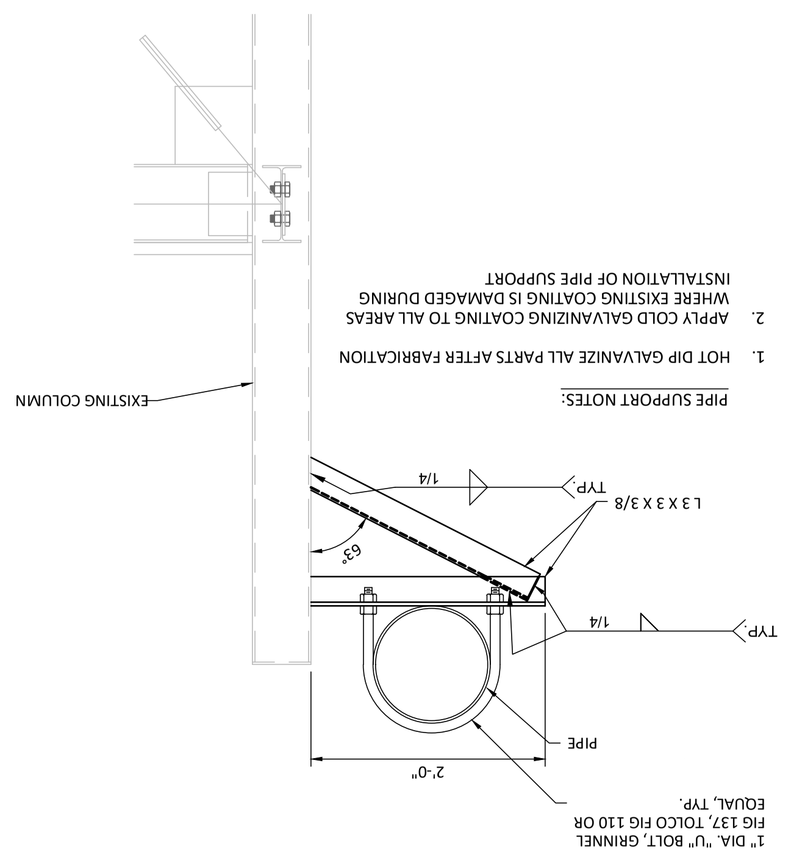

DEPT. OF UTILITIES
ST. TAMMANY PARISH GOVERNMENT
620 N. TYLER STREET
COVINGTON, LA 70433

No.	DESCRIPTION OF REVISION	DATE:

DESIGNED BY:	KMD
DRAWN BY:	GAL
CHECKED BY:	KMD
SUBMITTED BY:	KYLE ASSOC.
PROJECT No.:	TU2300178
ISSUE DATE:	6/12/2024
APPROVED BY:	---
SHEET SIZE:	ANSI D
SCALE:	3/8"=1'-0"

KEVIN M. DRANE
LICENSE No. 35485
STATE OF LOUISIANA
PROFESSIONAL ENGINEER

WEST ST TAMMANY REGIONAL STF
INFLUENT PUMP STATION
COVINGTON, LOUISIANA
PROJECT No.: TU 23000178

SCREEN OVERFLOW LINE AT EQ TANK

SHEET NO.
M-4

Plot Date: Tuesday, July 9, 2024 2:52:05 PM
User: Kevin Drane

STRUCTURAL- GENERAL NOTES

A. GENERAL

1. THESE NOTES SUPPLEMENT THE SPECIFICATIONS, WHICH SHALL BE REFERRED TO FOR ADDITIONAL REQUIREMENTS.
2. DO NOT SCALE CONTRACT DRAWINGS FOR THE PURPOSE OF ESTABLISHING DIMENSIONS.
3. THE CONTRACTOR SHALL BE RESPONSIBLE FOR ALL FINAL DIMENSIONS AND FIT-UP OF THE STRUCTURE, INCLUDING VERIFYING ALL EXISTING CONDITIONS AND DIMENSIONS BEFORE COMMENCING WORK OR FABRICATING MATERIALS.
4. THE CONTRACTOR SHALL VERIFY THE LOCATION OF ALL EXISTING UTILITIES BEFORE COMMENCING ANY WORK. ANY INTERFERENCE SHALL BE BROUGHT TO THE ATTENTION OF THE ENGINEER.
5. COORDINATE WITH THE MECHANICAL, PLUMBING, ELECTRICAL, AND CIVIL DRAWINGS AND VERIFY THE EXACT LOCATION OF ALL CHASES, INSERTS, OPENINGS, SLEEVES, FINISHES, DEPRESSIONS, SLOPES, PADS, AND OTHER PROJECT REQUIREMENTS, BEFORE COMMENCING ANY WORK. ANY DISCREPANCIES SHALL BE BROUGHT TO THE ATTENTION OF THE ENGINEER.
6. THE CONTRACTOR SHALL BE RESPONSIBLE FOR THE DESIGN, PLACEMENT, MAINTENANCE, ETC. OF ANY AND ALL SHORING, BRACING, TIE BACKS, ETC. NEEDED TO SUPPORT ANY PART OF THE NEW OR EXISTING CONSTRUCTION DURING THE ENTIRE CONSTRUCTION PROCESS TO ENSURE THE SAFETY AND INTEGRITY OF THE STRUCTURE UNTIL THE NECESSARY PERMANENT ELEMENTS ARE IN PLACE.

B. GOVERNING BUILDING CODE AND REFERENCES:

1. INTERNATIONAL BUILDING CODE 2015.
   A. STRUCTURAL MEMBERS ARE DESIGNED USING LOAD COMBINATIONS IN ACCORDANCE WITH THE ADOPTED BUILDING CODE.
2. MINIMUM DESIGN LOADS FOR BUILDINGS AND OTHER STRUCTURES, ASCE 7-16.

C. DESIGN CRITERIA AND LIVE LOADS

1. SEISMIC DESIGN DATA

A.	RISK CATEGORY	II
B.	SEISMIC IMPORTANCE FACTOR, Ie	1
C.	MAPPED SPECTRAL RESPONSE ACCELERATIONS:	
	I. SHORT PERIOD, SS	0.103g
	II. ONE SECOND PERIOD, S1.	0.057g
D.	SITE CLASS	D
E.	SPECTRAL RESPONSE COEFFICIENTS:	
	I. SHORT PERIOD, SDS	0.109
	II. ONE SECOND PERIOD, SD1	0.091
F.	SEISMIC DESIGN CATEGORY	B
G.	BASIC SEISMIC-FORCE-RESISTING SYSTEM(S)	STEEL ORDINARY CONCENTRICALLY BRACE FRAME
H.	RESPONSE MODIFICATION FACTOR(S), R	3.25
I.	ANALYSIS PROCEDURE USED	EQUIVALENT LATERAL FORCE

2. WIND DESIGN DATA

A.	ULTIMATE DESIGN WIND SPEED , Vult (3 SEC GUST)	130 MPH
B.	NOMINAL DESIGN WIND SPEED ,Vasd	101 MPH
C.	RISK CATEGORY	II
D.	WIND EXPOSURE	B

3. LIVE LOADS

A.	STAIRS	100 PSF
B.	BRIDGE	100 PSF

D. SUBMITTALS

1. DEFERRED SUBMITTALS: THE FOLLOWING ITEMS ARE ENGINEERED BY OTHERS. ENGINEERING AND DOCUMENTATION OF THESE ITEMS ARE TO BE PROVIDED BY OTHERS FOR REVIEW BY THE ENGINEER.
   A. PRE-ENGINEERED METAL STAIRS AND ALUMINUM RAILINGS.
2. FURNISH ONE PRINT OF SHOP AND ERECTION DRAWINGS TO ENGINEER FOR REVIEW PRIOR TO FABRICATION. SUBMIT IN A TIMELY MANNER TO PERMIT 10 WORKING DAYS FOR REVIEW BY ENGINEER.
3. FURNISH TWO SETS OF CONCRETE, GROUT AND MORTAR MIX DESIGNS INCLUDING STRENGTH TEST DATA AND MANUFACTURER'S LITERATURE ON ADMIXTURES FOR REVIEW BY ENGINEER NO LATER THAN 2 WEEKS PRIOR TO ON-SITE USE OF THESE MATERIALS.
4. GENERAL AND SUB-CONTRACTOR NOTES:
   A. THE GENERAL CONTRACTOR SHALL REVIEW ALL SUBMITTALS PRIOR TO SUBMITTAL FOR REVIEW BY THE ENGINEER IN ACCORDANCE WITH THE PROJECT SPECIFICATIONS.
   B. THE STRUCTURAL DRAWINGS SHALL NOT BE USED AS BACKGROUNDS FOR SHOP OR ERECTION DRAWINGS. DRAWINGS PREPARED IN THIS MANNER AND SUBMITTED FOR REVIEW TO THE ENGINEER WILL BE RETURNED REJECTED AND CONSIDERED AS NOT BEING IN CONFORMANCE WITH THE PROJECT SPECIFICATIONS.

E. FOUNDATIONS

1. THE SUBGRADE INFORMATION AND FOUNDATION DESIGN ARE BASED UPON A GEOTECHNICAL REPORT, NO. G15-108, PREPARED BY STRATUM ENGINEERING, LLC , DATED JANUARY 19, 2016. REFERENCE THIS REPORT FOR ADDITIONAL INFORMATION AND REQUIREMENTS. THE SOIL REPORT IS APPENDED TO THE SPECIFICATION.
2. PREPARE SITE IN ACCORDANCE WITH THE RECOMMENDATIONS OF THE GEOTECHNICAL REPORT. STRIP EXISTING GRADE OF ALL TOPSOIL, VEGETATION, AND OTHER UNDESIRABLE MATERIALS.
3. ALL SLABS, BEAMS, AND FOOTINGS NOT PILE-SUPPORTED SHALL BE SUPPORTED ON EXISTING UNDISTURBED SOIL OR ON NON-EXPANSIVE TYPE FILL COMPACTED TO 95% OF MAXIMUM STANDARD PROCTOR DENSITY. DESIGN SOIL PRESSURE = 2500 LBS. PER SQ. FT. AS ESTABLISHED BY THE GEOTECHNICAL INVESTIGATION PERFORMED BY STRATUM ENGINEERING, LLC AND DATED JANUARY 19, 2016.
4. ALL ELEVATIONS ARE BASED ON THE TOPOGRAPHIC SURVEY DRAWING BY KELLY McHUGH & ASSOCIATES, INC., DATED JULY 26, 2016.

F. CAST-IN-PLACE CONCRETE (NON-PRESTRESSED)

1. STRUCTURAL CONCRETE HAS BEEN DESIGNED IN ACCORDANCE WITH THE "BUILDING CODE REQUIREMENTS FOR STRUCTURAL CONCRETE", ACI 318-08.
2. WORK SHALL CONFORM TO ALL REQUIREMENTS OF ACI 301-LATEST EDITION, "SPECIFICATIONS FOR STRUCTURAL CONCRETE", PUBLISHED BY THE AMERICAN CONCRETE INSTITUTE, FARMINGTON HILLS, MICHIGAN, EXCEPT AS MODIFIED BY THE REQUIREMENTS OF THESE CONTRACT DOCUMENTS.
3. TOLERANCES FOR CONCRETE CONSTRUCTION AND MATERIALS SHALL CONFORM TO ALL REQUIREMENTS OF ACI 117-LATEST EDITION, "SPECIFICATIONS FOR TOLERANCES FOR CONCRETE CONSTRUCTION AND MATERIALS", PUBLISHED BY THE AMERICAN CONCRETE INSTITUTE, FARMINGTON HILLS, MICHIGAN, EXCEPT AS MODIFIED BY THE REQUIREMENTS OF THESE CONTRACT DOCUMENTS.
4. WORK SHALL CONFORM TO ALL REQUIREMENTS OF ACI 305.1-LATEST EDITION, "SPECIFICATIONS FOR HOT WEATHER CONCRETING", PUBLISHED BY THE AMERICAN CONCRETE INSTITUTE, FARMINGTON HILLS, MICHIGAN, EXCEPT AS MODIFIED BY THE REQUIREMENTS OF THESE CONTRACT DOCUMENTS.
5. ALL CONCRETE SHALL BE NORMAL WEIGHT CONCRETE, UNIT WEIGHT APPROXIMATELY 145 PCF, UNLESS OTHERWISE NOTED.CLEARLY IDENTIFY INTENDED USE FOR EACH MIX DESIGN SUBMITTED FOR APPROVAL.
6. CONCRETE SHALL CONFORM TO THE FOLLOWING:

	W/C RATIO
A. FOUNDATION, SLABS 4,000 PSI @ 28 DAYS (NORMAL WEIGHT)	0.45

7. ALL CONCRETE IN CONTACT WITH SOILS SHALL USE TYPE I-II CEMENT.
8. ALL CONCRETE SHALL BE NORMAL WEIGHT (APPROXIMATELY 145 LBS. PER CUBIC FT.).
9. MIXING WATER SHALL BE POTABLE. THE USE OF WASH WATER AS A PORTION OF THE MIXING WATER SHALL NOT BE PERMITTED.
10. CLEAN ALL CONSTRUCTION JOINTS THOROUGHLY AND PURPOSELY ROUGHEN THE SURFACE TO 1/4" AMPLITUDE USING A ROTARY HAMMER PRIOR TO PLACING ADJACENT CONCRETE.
11. SLABS AND GRADE BEAMS SHALL NOT HAVE JOINTS IN A HORIZONTAL PLANE. ALL CONSTRUCTION JOINTS SHALL BE AS DETAILED OR AS APPROVED BY THE ENGINEER.
12. PLACEMENT OF SLEEVES OR OPENINGS THROUGH GRADE BEAMS IS NOT PERMITTED UNLESS INDICATED ON STRUCTURAL DRAWINGS OR APPROVED, IN WRITING, BY ENGINEER.
13. CAREFULLY COORDINATE THE PLACEMENT OF ALL CAST-IN-PLACE EMBEDS AND ANCHOR RODS. ANCHOR RODS SHALL BE SET WITH A TEMPLATE. ALL EMBED ITEMS SHALL BE SECURELY ATTACHED TO FORM WORK OR REINFORCING.
14. STABILIZATION/BLINDING CONCRETE SHALL BE STANDARD NON-REINFORCED 3000PSI NORMAL WEIGHT CONCRETE. PLACE OVER COMPACTED SUB BASE TO PROVIDE LEVEL BASE FOR REINFORCEMENT CHAIRS AND FOUNDATION CONSTRUCTION.
15. CONCRETE MAY BE SELF-CONSOLIDATING OR STANDARD MIX PER SPECIFICATIONS AND INSTALLED PER ACI 304R. STANDARD MIX CONCRETE SHOULD BE PLACED IN HORIZONTAL LAYERS NOT EXCEEDING 2 FEET IN DEPTH AND INCLINED LAYER AND COLD JOINTS SHOULD BE AVOIDED. FOR MONOLITHIC CONSTRUCTION EACH CONCRETE LAYER SHOULD BE PLACED WHILE THE UNDERLYING LAYER IS STILL RESPONSIVE TO VIBRATION, AND LAYERS SHOULD BE SUFFICIENTLY SHALLOW TO PERMIT THE TWO LAYERS TO BE INTEGRATED BY PROPER VIBRATION.

G. REINFORCING STEEL

1. ALL REINFORCING STEEL SHALL BE IN ACCORDANCE WITH ASTM A615, GRADE 60.
2. CONCRETE CLEAR COVER OVER REINFORCING AND PLACING TOLERANCES SHALL BE IN ACCORDANCE WITH THE REQUIREMENTS OF ACI 318-LATEST EDITION.
3. PROVIDE CLASS "B" REINFORCING SPLICES. PROVIDE STANDARD 90 DEGREE HOOKS IN ACCORDANCE WITH ACI 318 LATEST EDITION, UNLESS NOTED OTHERWISE. STAGGER SPLICES UNLESS SPECIFICALLY NOTED.
4. DETAIL BARS IN ACCORDANCE WITH "ACI DETAILING MANUAL", PUBLICATION SP-66, AND "BUILDING CODE REQUIREMENTS FOR STRUCTURAL CONCRETE," ACI 318, LATEST EDITIONS. PROVIDE DETAILS INDICATING REINFORCING CONTINUITY AT CONSTRUCTION JOINTS.
5. REINFORCING BARS SHALL BE FREE OF ALL DELETERIOUS COATINGS WHEN CONCRETE IS PLACED AND THE LENGTH, SIZE, AND LOCATION SHALL BE AS SHOWN ON THE PROJECT PLANS.
6. WHERE REQUIRED, PROVIDE DOWELS MATCHING SIZE AND SPACING OF MAIN REINFORCEMENT.
7. PROVIDE A 90 DEGREE HOOK ON ALL TOP AND SIDE REINFORCING BARS IN ALL BEAMS AT DISCONTINUOUS ENDS.
8. PROVIDE ACCESSORIES NECESSARY TO PROPERLY SUPPORT REINFORCING AT POSITIONS SHOWN ON PLANS AND DETAILS. REINFORCING SHALL BE CHAIRED WITH 3000 PSI CONCRETE BRICKETTES SPACED TO ADEQUATELY SUPPORT THE REINFORCING BUT NO GREATER THAN 3'-0" O.C. EACH WAY.
9. PROVIDE STIRRUPS WITH 2-#4 TOP SUPPORT BARS FOR LENGTH OF STIRRUP SPACING WHERE TOP BARS NOT OTHERWISE PROVIDED.
10. ALL WELDING TO REINFORCING WILL CONFORM TO THE AWS STRUCTURAL WELDING CODE-REINFORCING STEEL, D1.4-2005.
11. DO NOT RE-BEND ANY BARS.
12. INSTALL CORNER BARS IN THE OUTSIDE FACE OF EDGE BEAMS AT EVERY CORNER ONCE TOP AND BOTTOM. BAR SHALL BE THE SAME SIZE AS THE LARGEST BEAM BAR.
13. WELDED WIRE FABRIC (WWF) SHALL BE IN ACCORDANCE WITH ASTM A-185. WIRE SHALL CONFORM TO ASTM A82. LAP ALL FABRIC ONE WIRE SPACING PLUS 2 INCHES.

H. STRUCTURAL STEEL

1. ALL STRUCTURAL STEEL HAS BEEN DESIGNED IN ACCORDANCE WITH THE AISC SPECIFICATION FOR STRUCTURAL STEEL BUILDINGS.
2. UNLESS NOTED OTHERWISE ALL W STRUCTURAL STEEL SHAPES SHALL CONFORM TO ASTM A992 OR ASTM A572 GRADE 50. C AND S STRUCTURAL STEEL SHAPES, RODS, PLATES, AND ANGLES SHALL BE IN ACCORDANCE WITH ASTM A36.
3. TUBE SECTIONS SHALL BE ASTM A-500 GRADE B (46 KSI YIELD).
4. PIPE SECTIONS SHALL BE ASTM A53 TYPE S, GRADE B (35 KSI YIELD).
5. SPLICES IN STRUCTURAL STEEL NOT SHOWN ON THE STRUCTURAL DRAWINGS WILL NOT BE ACCEPTED WITHOUT SPECIFIC APPROVAL OF THE STRUCTURAL ENGINEER.
6. UNLESS NOTED OTHERWISE ALL CONNECTION BOLTS IN SINGLE PLATE CONNECTIONS SHALL BE 1" DIAMETER ASTM A325N (SEE SCHEDULE) AND ALL OTHER CONNECTION BOLTS SHALL BE 3/4" DIAMETER ASTM A325N.
7. UNLESS NOTED OTHERWISE ALL ANCHOR BOLTS SHALL BE 3/4" DIAMETER ASTM A307. ALL ANCHOR BOLTS SHALL BE HEADED AT THE UNTHREADED END.
8. UNLESS NOTED OTHERWISE EVERY WELD SHALL DEVELOP THE FULL STRENGTH OF THE LESSER OF THE MEMBERS IT JOINS. ALL BUTT, GROOVE, OR BEVEL WELDS SHALL BE COMPLETE, FULL PENETRATION.
9. WHERE POSSIBLE, ALL BOLT HOLES IN STRUCTURAL STEEL SHALL BE DRILLED OR PUNCHED IN THE SHOP. ANY HOLES REQUIRED TO BE MADE AT THE PROJECT SITE SHALL BE MECHANICALLY DRILLED OR PUNCHED. NO BURNING OF HOLES SHALL BE ALLOWED.
10. UNLESS SHOWN OTHERWISE ALL CAP AND BASE PLATES SHALL BE WELDED TO THE COLUMNS CONTINUOUSLY ALL AROUND WITH A 1/4" FILLET WELD.

J. EARTHWORK NOTES:

1. THE CONTRACTOR SHALL BE RESPONSIBLE IN PERFORMING ALL EARTH WORK IN ACCORDANCE WITH SPECIFICATION 2200 AND BELOW REFERENCED SOILS REPORT.
2. THE CONTRACTOR SHALL ASSUME FULL RESPONSIBILITY FOR MAINTAINING THE STABILITY OF ALL EXCAVATED FACES IN COMPLIANCE WITH OSHA REQUIREMENTS UNTIL FINAL ACCEPTANCE OF THE WORK.
3. ALL LIFTS SHALL BE HEAVILY PROOF-ROLLED WITH A MODERATELY HEAVY LOADED PNEUMATIC ROLLER. SOILS THAT ARE OBSERVED TO RUT OR DEFLECT EXCESSIVELY UNDER THE MOVING LOADS SHALL BE UNDERCUT AND REPLACED WITH PROPERLY COMPACTED FILL.
4. BACK FILL: SHALL BE A CLASSIFIED AS SC OR CL WITH A PLASTICITY INDEX BETWEEN 5 AND 25.
5. ALL FILL SHALL BE PLACED IN LIFTS NO GREATER THAN 9 INCHES AND COMPACTED TO 95% MODIFIED PROCTOR.
6. EXCESS EXCAVATED MATERIAL AND/OR UNUSED BACK FILL MATERIALS SHALL BE REMOVED AND HAULED TO AN AREA DESIGNATED BY OWNER.
7. WASHED SAND SHALL COMPLY WITH ASTM C33 FOR FINE AGGREGATE CONCRETE SAND.

REQUIRED VERIFICATION AND INSPECTION OF CONCRETE CONSTRUCTION (REFER TO 2012 INTERNATIONAL BUILDING CODE -- TABLE 1705.3)

VERIFICATION AND INSPECTION	CONTINUOUS INSPECTION	PERIODIC INSPECTION	REFERENCED STANDARD	IBC REFERENCES
INSPECTION OF REINFORCING STEEL, INCLUDING PLACEMENT		PERIODIC	ACI 318: 3.5, 7.1-7.7	IBC 1910.4
INSPECTION OF REINFORCING STEEL WELDING	NA	NA	AWS D1.4 ACI 318: 3.5.2	
INSPECTION OF ANCHORS CAST IN CONCRETE WHERE ALLOWABLE LOADS HAVE BEEN INCREASED OR WHERE STRENGTH DESIGN IS USED.		PERIODIC	ACI 318 3.8.6, 8.1.3, 21.1.8	IBC 1908.5, 1909.1
INSPECTION OF ANCHORS POST INSTALLED IN HARDENED CONCRETE MEMBER		PERIODIC	ACI 318: 3.8.6, 8.1.3, 21.1.8	IBC 1909.1
VERIFYING USE OF REQUIRED DESIGN MIX		PERIODIC	ACI 318: CH.4, 5.2-5.4	IBC 1904.2, 1910.2, 1910.3
AT THE TIME FRESH CONCRETE IS SAMPLED TO FABRICATE SPECIMENS FOR STRENGTH TESTS, PERFORM SLUMP AND AIR CONTENT TESTS, DETERMINE TEMPERATURE OF CONCRETE.	CONTINUOUS		ASTM C 172, ASTM C31, ACI 318: 5.6, 5.8	IBC 1910.10
INSPECTION OF CONCRETE PLACEMENT FOR PROPER APPLICATION TECHNIQUES.	CONTINUOUS		ACI 318: 5.9, 5.10	IBC 1910.6, 1910.7, 1910.8
INSPECTION FOR MAINTENANCE OF SPECIFIED CURING TEMPERATURE AND TECHNIQUES		PERIODIC	ACI 318: 5.11-5.13	IBC 1910.9
INSPECT FORMWORK FOR SHAPE, LOCATION, AND DIMENSIONS FOR THE CONCRETE MEMBER BEING FORMED.		PERIODIC	ACI 318:6.1.1 REFERENCED STANDARD	

THE INFORMATION FOUND ON THIS PAGE IS PROVIDED AS SUPPLEMENTAL INFORMATION TO FACILITATE ANY IBC CODE REVIEW. SEE SPECIFICATION FOR ALL DIRECTIONS GIVEN TO THE CONTRACTOR FOR ITS IMPLEMENTATION.

ST. TAMMANY PARISH GOVERNMENT

DEPT. OF UTILITIES
ST. TAMMANY PARISH GOVERNMENT
620 N. TYLER STREET
COVINGTON, LA 70433

No.	DESCRIPTION OF REVISION	DATE:

DESIGNED BY:	TPD
DRAWN BY:	GAL
CHECKED BY:	TPD
SUBMITTED BY:	KYLE ASSOC.
PROJECT No.:	TU23000178
ISSUE DATE:	6/12/2024
APPROVED BY:	---
SHEET SIZE:	ANSI D
SCALE:	NTS

STATE OF LOUISIANA
THOMAS DYER
License No. 36743
06/12/24
PROFESSIONAL ENGINEER

WEST ST TAMMANY REGIONAL STF
INFLUENT PUMP STATION
COVINGTON, LOUISIANA
PROJECT No.: TU 23000178

STRUCTURAL – GENERAL NOTES

SHEET NO.
GS-1

File:N:\2023\23033 - West St Tammany Regional Sewer Treatment Facility\Drawings\Structural\23033-GS-1.dwg

Plot Date: Tuesday, July 9, 2024 2:51:42 PM
User: Kevin Drane

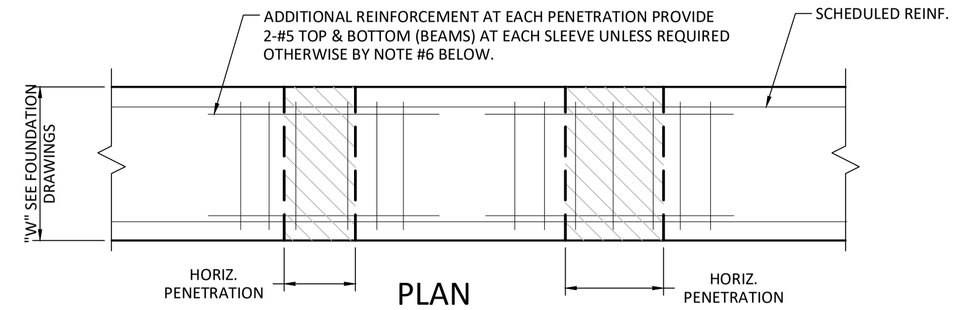

PLAN

NOTE: STIRRUPS NOT SHOWN FOR CLARITY.

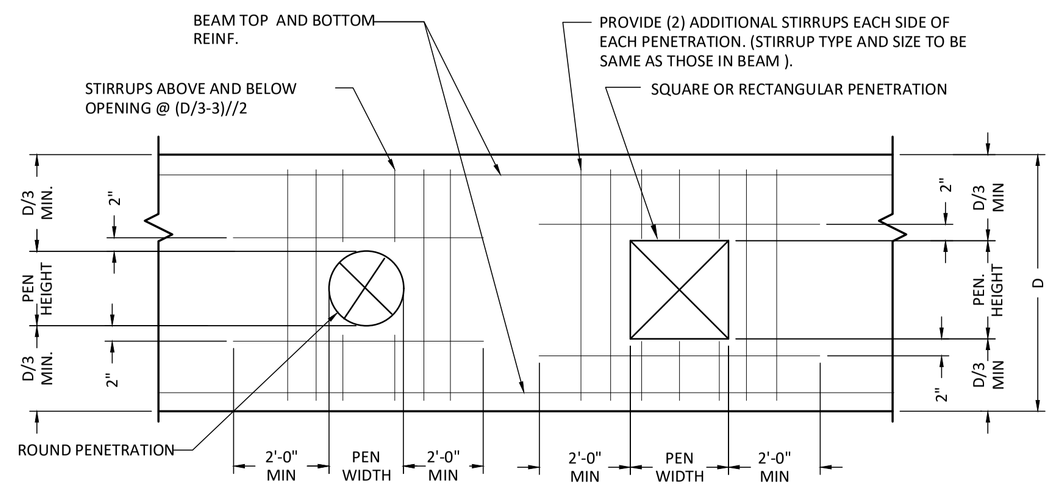

SIDE ELEVATION
HORIZONTAL PENETRATIONS IN BEAMS

N.T.S

NOTES:

1. GENERAL CONTRACTOR TO COORDINATE LOCATION, SIZE AND ELEVATION AND INCLUDE IN HIS CONTRACT PRICE ALL REQUIRED HORIZONTAL PENETRATIONS THROUGH CONCRETE BEAMS AND JOISTS, WHETHER SHOWN ON STRUCTURAL DRAWINGS OR NOT.
2. WHERE BEAM PENETRATIONS ARE REQUIRED, BUT ARE NOT SPECIFICALLY DETAILED ON STRUCTURAL DRAWINGS, SUBMIT DRAWINGS SHOWINGS DIMENSIONS AND LOCATIONS OF ALL REQUIRED PENETRATIONS, FOR REVIEW AND APPROVAL.
3. "D" DENOTES THE DEPTH OF BEAM, OR SLABS WITH A "D" EQUAL OR GREATER THAN 12".
4. CLEAR SPACING BETWEEN PENETRATIONS, SHALL BE 24" MINIMUM UNLESS DESIGNED OTHERWISE BY THE ENGINEER.
6. FOR LOCATIONS AND/OR SIZES OF PENETRATIONS NOT CONFORMING TO THE ABOVE CRITERIA AND NOT OTHERWISE DETAILED ON THE STRUCTURAL DRAWINGS. CONTRACTOR SHALL COORDINATE THE REQUIRED ADDITIONAL REINFORCEMENT WITH THE ENGINEER ON THE SHOP DRAWINGS.

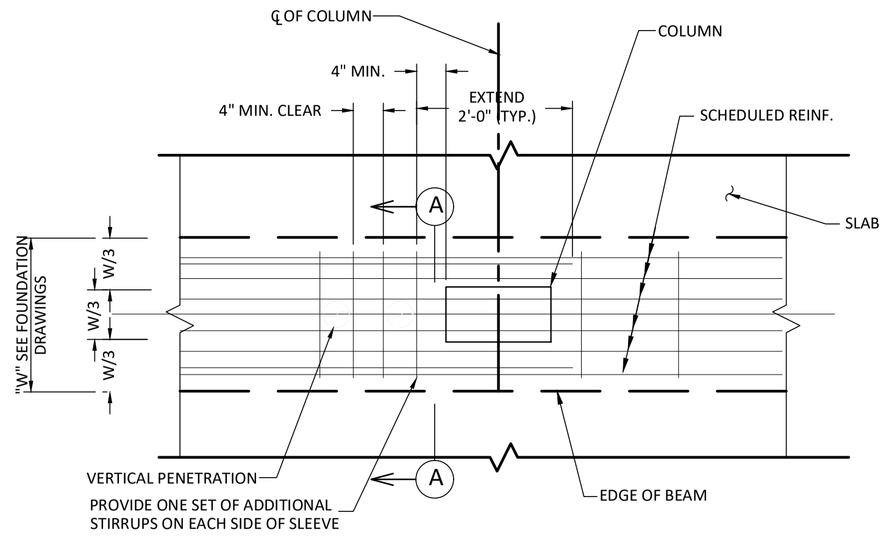

PLAN

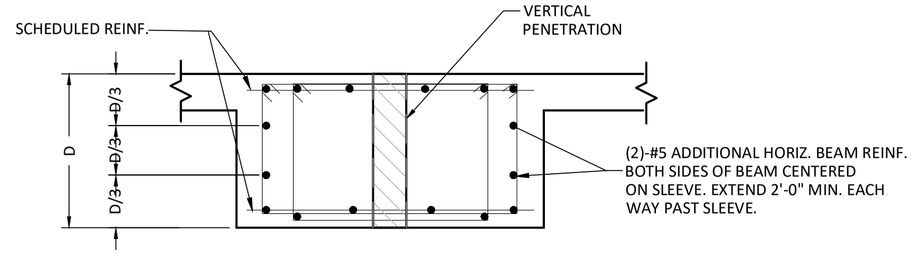

SECTION - A
VERTICAL PENETRATIONS IN BEAM/SLABS

N.T.S

NOTES:

1. REQUIRED BEAM SLEEVES ARE TO BE COORDINATED BY CONTRACTOR. REQUIRED SLEEVES MAY OR MAY NOT BE SHOWN ON THE STRUCTURAL DRAWINGS. CONTRACTOR SHALL SUBMIT PLAN SHOWING LAYOUT OF ALL SLEEVES WITH FORM WORK SHOP DRAWING SUBMITTAL.
2. SLEEVES SHALL BE LOCATED ON THE BEAM CENTERLINE OR AT LEAST WITHIN THE MIDDLE THIRD OF THE SCHEDULED BEAM WIDTH.
3. CONTINUOUS BEAM REINFORCING MAY BE SLIGHTLY DISPLACED (3"MAX.) OR ADJACENT BARS BUNDLED (2 BARS BUNDLES MAX.) TO FACILITATE SLEEVE INSTALLATION, DO NOT CUT, OFFSET, OR BEND REINFORCING.
4. SLEEVES OCCURRING ON OPPOSITE SIDES OF A COLUMN MUST BE IN LINE.
5. THE OUTSIDE DIAMETER OF A SLEEVE MAY NOT EXCEED 15% OF THE SCHEDULE WIDTH OF THE BEAM THROUGH WHICH IT MUST PASS.
6. THE CONTRACTOR SHALL CONTACT THE ENGINEER OF RECORD FOR DIRECTIONS WHEN A SLEEVE SIZE OR LOCATION DOES NOT MEET THE CONDITIONS ESTABLISHED ABOVE.

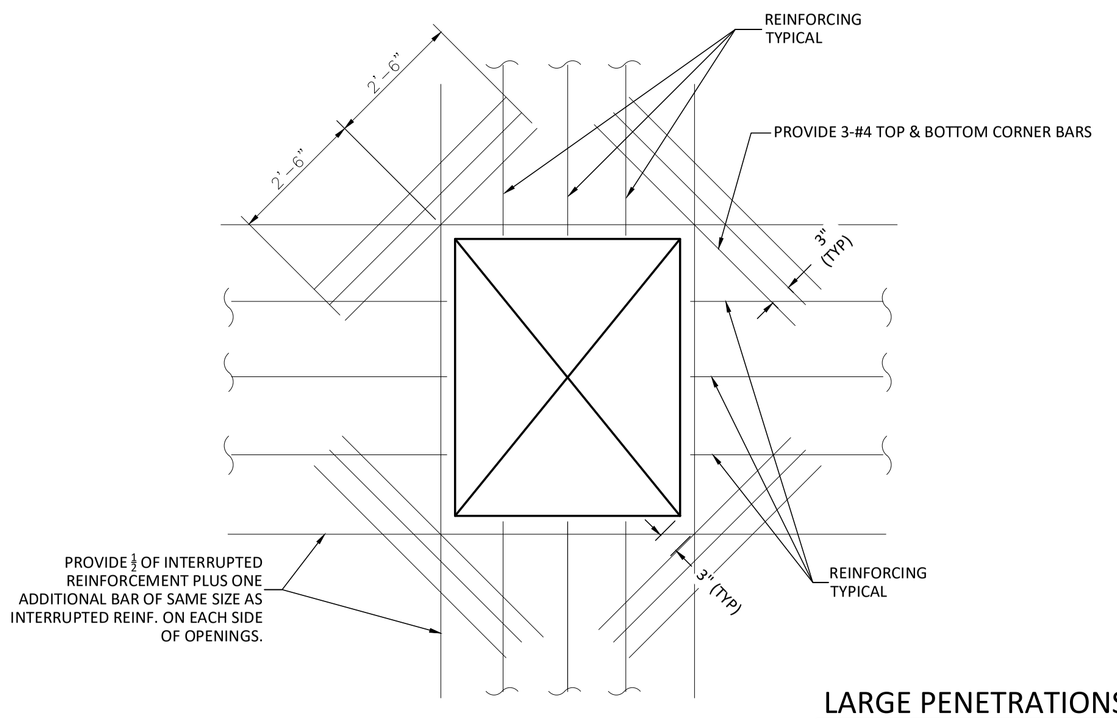

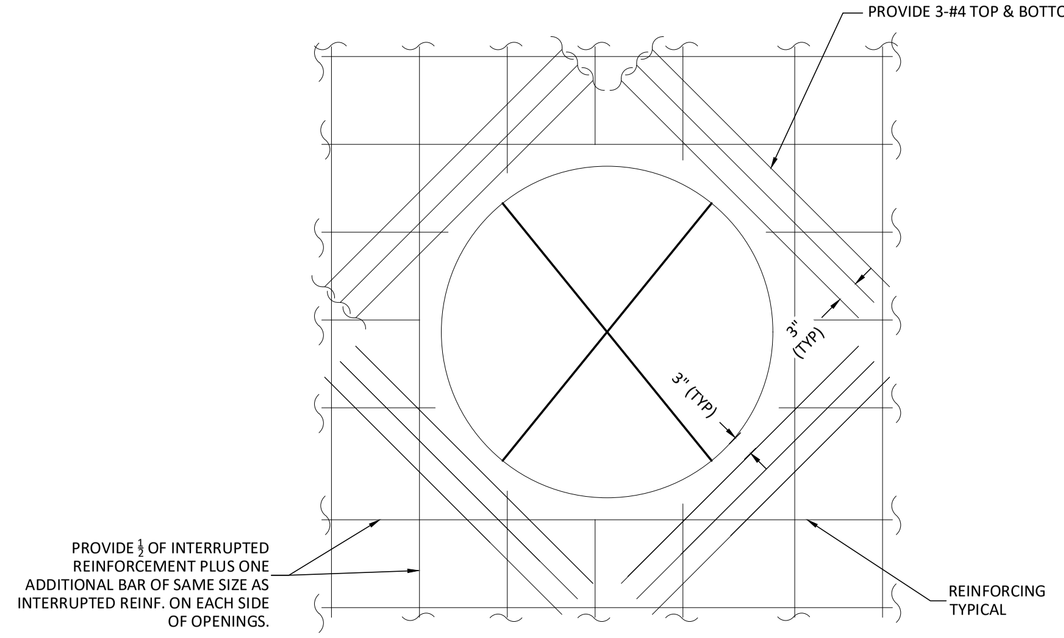

LARGE PENETRATIONS INTO SLABS/WALLS

N.T.S

DEPT. OF UTILITIES
ST. TAMMANY PARISH GOVERNMENT
620 N. TYLER STREET
COVINGTON, LA 70433

No.	DESCRIPTION OF REVISION	DATE:

DESIGNED BY:	TPD
DRAWN BY:	GAL
CHECKED BY:	TPD
SUBMITTED BY:	KYLE ASSOC.
PROJECT No.:	TU23000178
ISSUE DATE:	6/12/2024
APPROVED BY:	— —
SHEET SIZE:	ANSI D
SCALE:	NTS

STATE OF LOUISIANA
THOMAS DYER
License No. 36743
06/12/24
PROFESSIONAL ENGINEER

WEST ST TAMMANY REGIONAL STF
INFLUENT PUMP STATION
COVINGTON, LOUISIANA
PROJECT No.: TU 23000178

STRUCTURAL GENERAL DETAILS

SHEET NO.
GS-2

File:N:\2023\23033 - West St Tammany Regional Sewer Treatment Facility\Drawings\Structural\23033-GS-1.dwg

Plot Date: Tuesday, July 9, 2024 2:53:16 PM
User: Kevin Drane
File:N:\2023\23033 - West St Tammany Regional Sewer Treatment Facility\Drawings\Structural\23033-GS-3.dwg

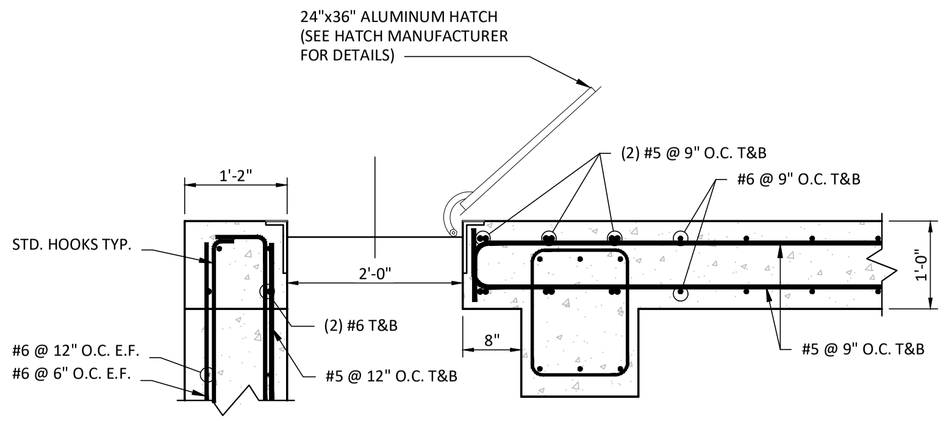

S-1 / S-1 HATCH OPENING DETAIL
SCALE: 3/4" = 1'-0"

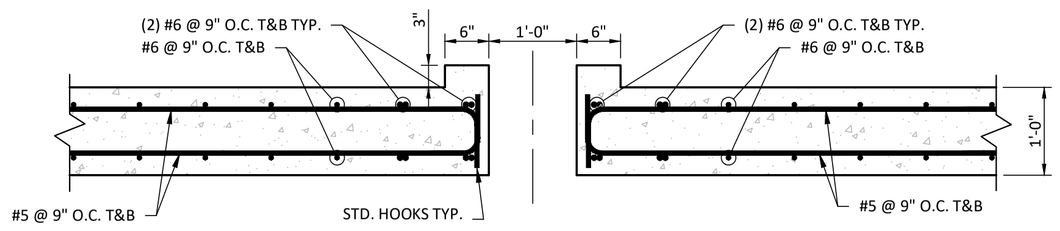

S-2 / S-1 PUMP OPENING DETAIL
SCALE: 3/4" = 1'-0"

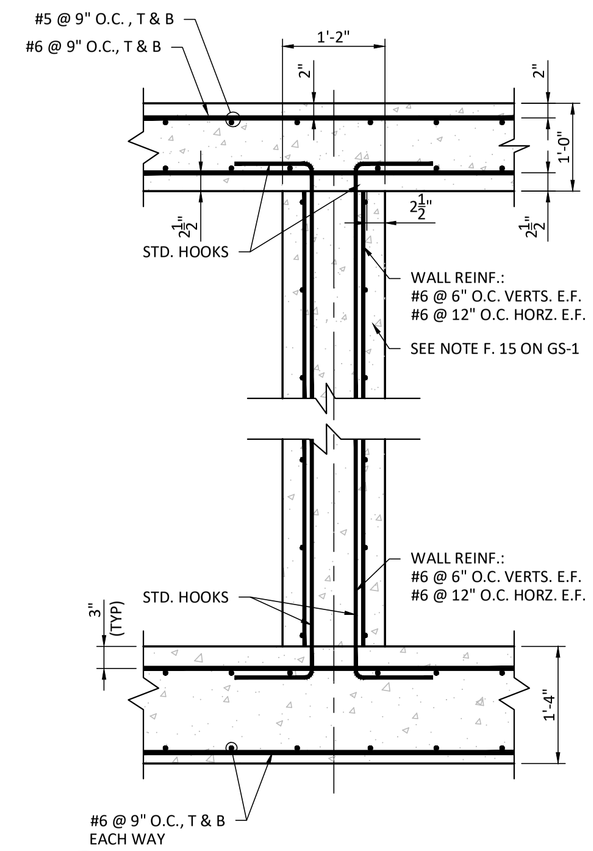

S-3 / S-1, S-2 BAFFLE WALL DETAIL
SCALE: 3/4" = 1'-0"

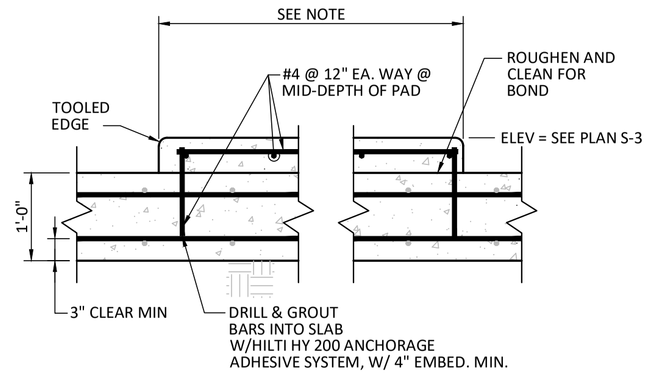

NOTE: VERIFY EQUIPMENT DIMENSIONS WITH MANUFACTURER. PROVIDE 3" CLEAR BEYOND LIMIT OF EQUIPMENT ALL AROUND.

S-4 / S-1 EQUIPMENT/HOUSEKEEPING PAD DETAIL
SCALE: 3/4" = 1'-0"

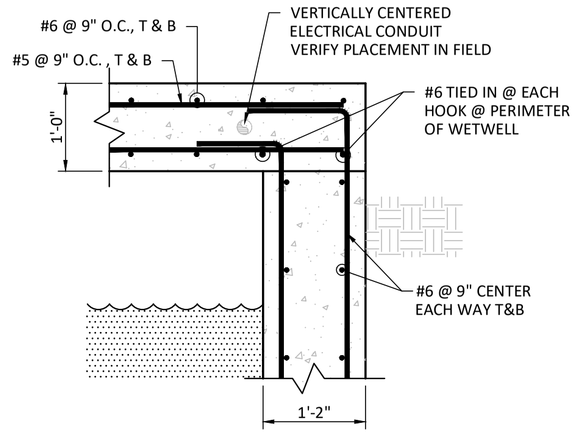

S-5 / S-1 WET WELL WALL HEAD DETAIL
SCALE: 3/4" = 1'-0"

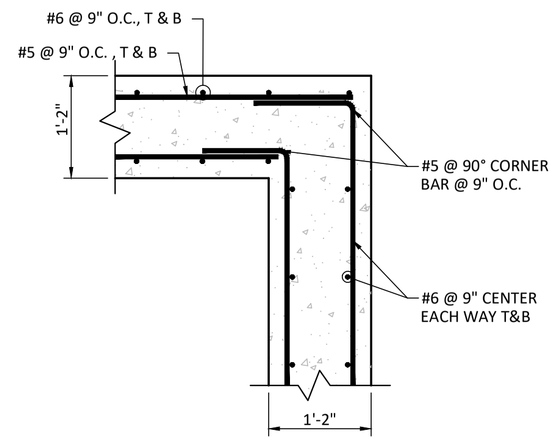

S-5a / S-2 WET WELL CORNER DETAIL
SCALE: 3/4" = 1'-0"

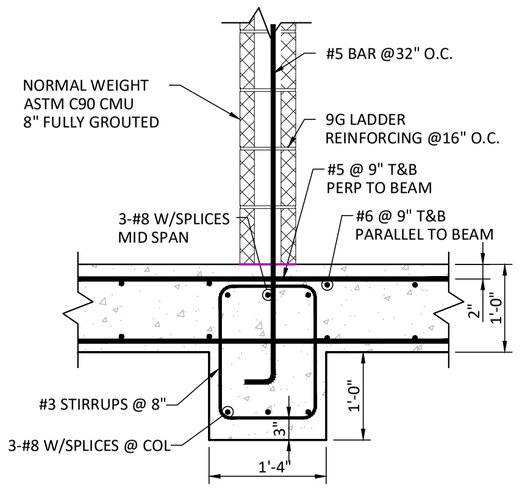

S-6 / S-1 FLOOR BEAM SECTION
SCALE: 3/4" = 1'-0"

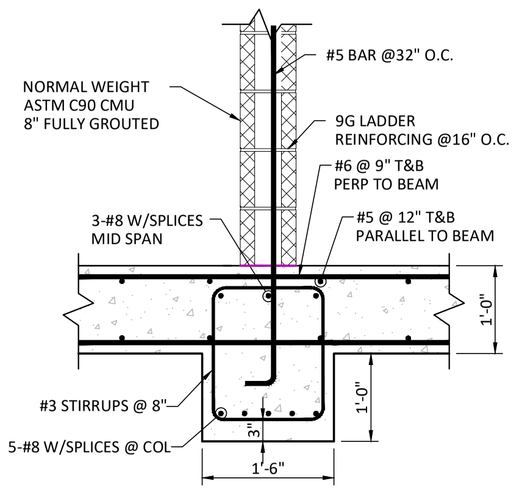

S-7 / S-1 FLOOR BEAM SECTION
SCALE: 3/4" = 1'-0"

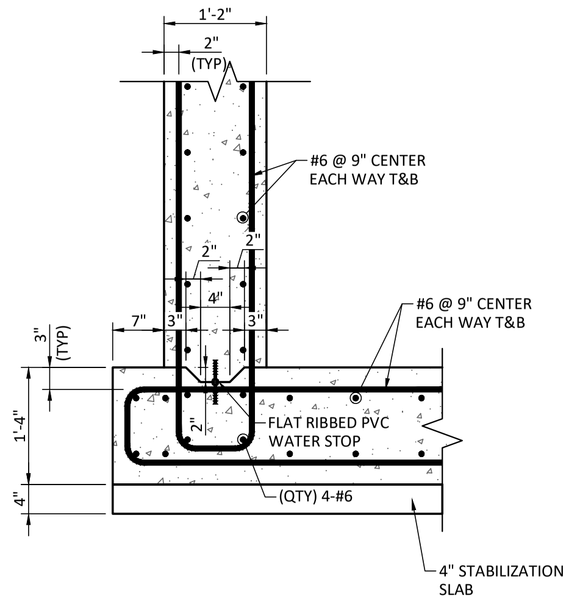

S-8 / S-3 SLAB AND WALL SECTION
SCALE: 3/4" = 1'-0"

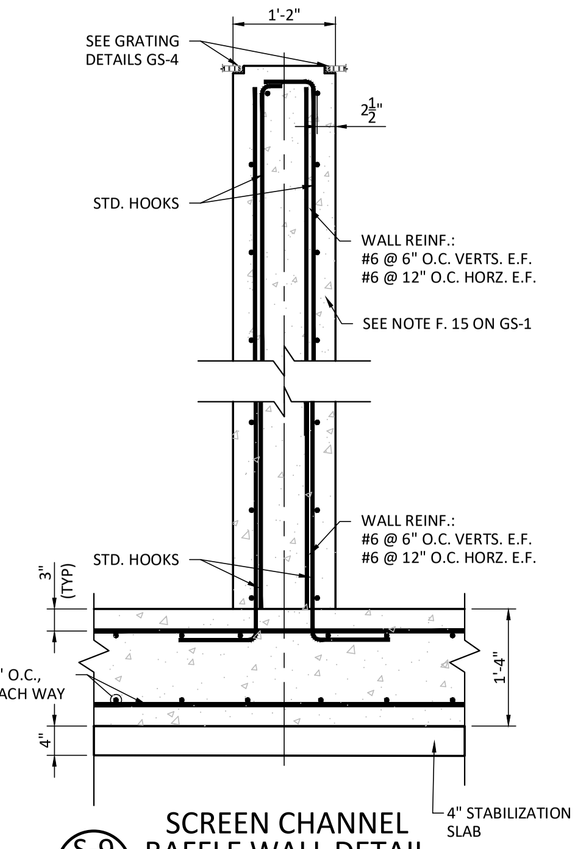

S-9 / S-1 SCREEN CHANNEL BAFFLE WALL DETAIL
SCALE: 3/4" = 1'-0"

DEPT. OF UTILITIES
ST. TAMMANY PARISH GOVERNMENT
620 N. TYLER STREET
COVINGTON, LA 70433

No.	DESCRIPTION OF REVISION	DATE:

DESIGNED BY:	TPD
DRAWN BY:	GAL
CHECKED BY:	TPD
SUBMITTED BY:	KYLE ASSOC.
PROJECT No.:	TU23000178
ISSUE DATE:	6/12/2024
APPROVED BY:	---
SHEET SIZE:	ANSI D
SCALE:	NTS

STATE OF LOUISIANA
THOMAS DYER
License No. 36743
06/12/24
PROFESSIONAL ENGINEER

WEST ST TAMMANY REGIONAL STF
INFLUENT PUMP STATION
COVINGTON, LOUISIANA
PROJECT No.: TU 23000178

DETAILS

SHEET NO.
GS-3

Plot Date: Tuesday, July 9, 2024 2:52:58 PM
User: Kevin Drane
File:N:\2023\23033 - West St Tammany Regional Sewer Treatment Facility\Drawings\Structural\23033-GS-3.dwg

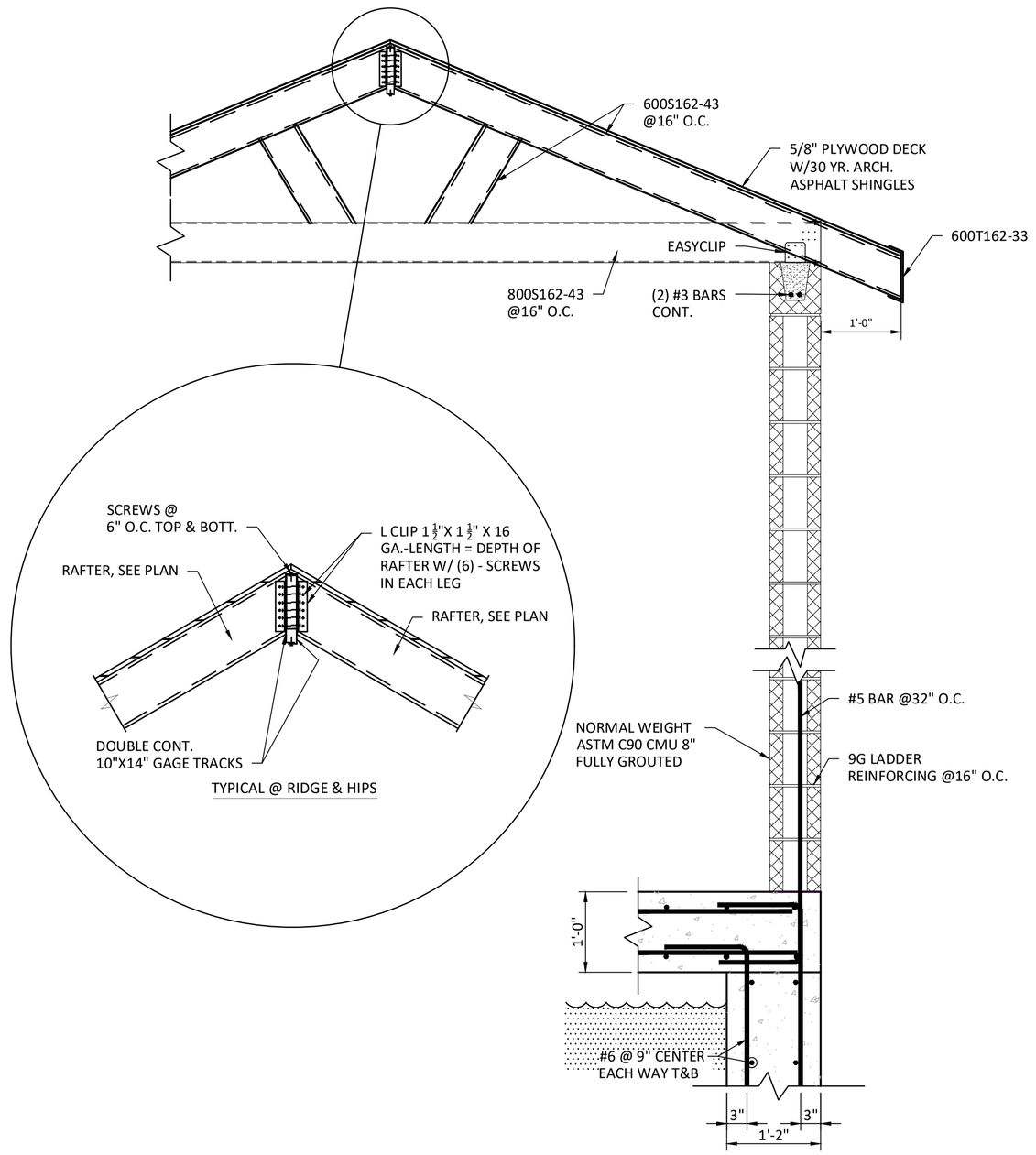

S-10 / S-1 CMU WALL DETAIL
3/4" = 1'-0"

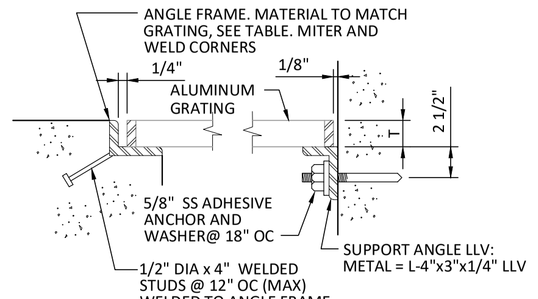

GRATING FRAME TABLE SIZED TO MATCH GRATING				
GRATING DEPTH T	FRAME ANGLE (STEEL)		GRATING DEPTH T	FRAME ANGLE
1"	1 3/4"x1 1/4"x1/4" (1 1/4"x1 1/4"x1/4")		2"	*2 1/2"x2 1/2"x1/2"
1 1/4"	2"x1 1/2"x1/4" (1 1/2"x1 1/2"x1/4")		2 1/4"	2 1/2"x2 1/2"x1/4"
1 1/2"	1 3/4"x1 3/4"x1/4"		2 1/2"	3"x3"x1/2"
1 3/4"	2"x2"x1/4"			

* OR USE 2 1/2"x2 1/2"x1/4" W/ 1/4" SHIM PLATE WELDED TO BOTTOM

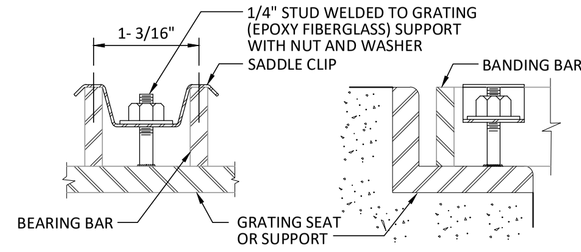

GRATING CLIP DETAIL

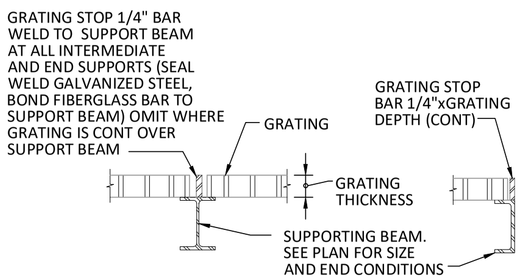

GRATING STOP DETAIL

S-11 / S-1 GRATING DETAIL
3/4" = 1'-0"

NOTES:
1. UNLESS INDICATED OTHERWISE, ALL GRATING SHALL BE ALUMINUM.
2. GRATING DEPTH TO BE DETERMINED BY MANUFACTURER AND APPROVED BY ENGINEER (UNO).
3. ALL ENDS AND OPENINGS SHALL BE BANDED.
4. WEIGHT OF GRATING SECTION SHALL NOT EXCEED 80 LBS.
5. METAL BEARING BARS SHALL BE DEPTH T x 3/16" @ 1 3/16" OC
   CROSS BARS SHALL BE @ 4" OC.
6. PROVIDE A MINIMUM OF 4 CLIPS PER GRATING PANEL, APPROX 4" FROM PANEL CORNERS. MAXIMUM CLIP SPACING AT 36" OC.
7. MATERIALS:
   A. ALUMINUM GRATING - USE ALUMINUM ANGLE SUPPORTS AND STAINLESS STEEL BOLTS AND CLIPS. ALUMINUM IN CONTACT WITH CONCRETE SHALL BE COATED PER THE PROTECTIVE COATING SPECIFICATIONS.

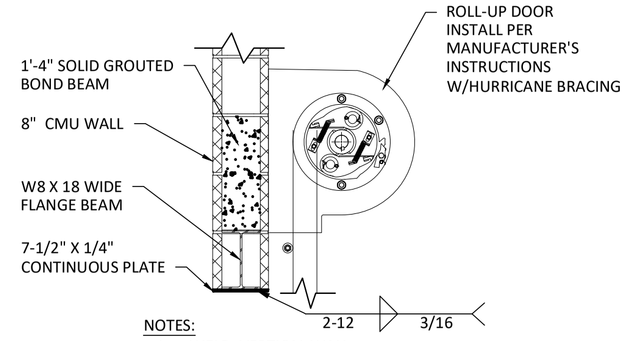

NOTES:
1. WELD VERTICAL WALL REINFORCEMENT TO STEEL LINTELS.
2. SHORE LINTEL AT MIDSPAN UNTIL CMU REACHES FULL STRENGTH.

S-12 / S-1 STEEL LINTELS @ CMU DETAIL
3/4" = 1'-0"

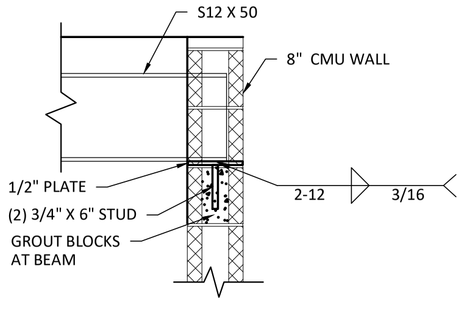

S-13 / S-3 HOIST AND TROLLEY BEAM DETAIL
3/4" = 1'-0"

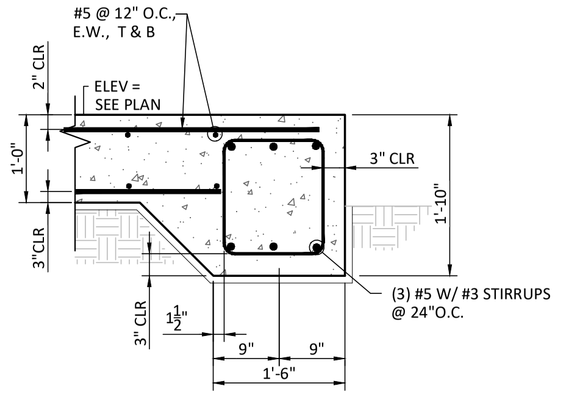

S-14 / S-1 EXTERIOR SLAB SECTION
SCALE: 3/4" = 1'-0"

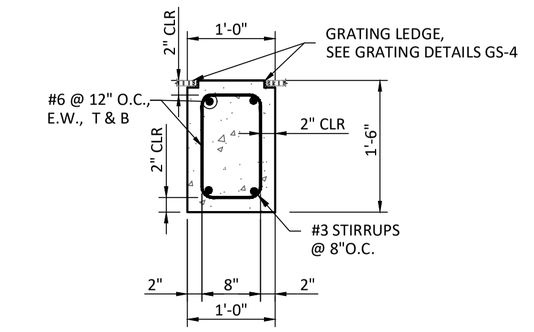

S-15 / S-1 GRATING SUPPORT BEAM
SCALE: 3/4" = 1'-0"

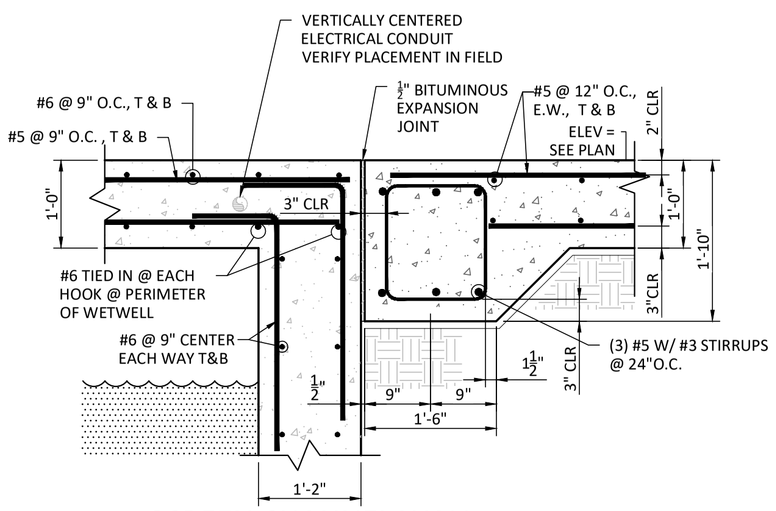

S-16 / S-1 SCREEN CHANNEL WALL HEAD DETAIL
SCALE: 3/4" = 1'-0"

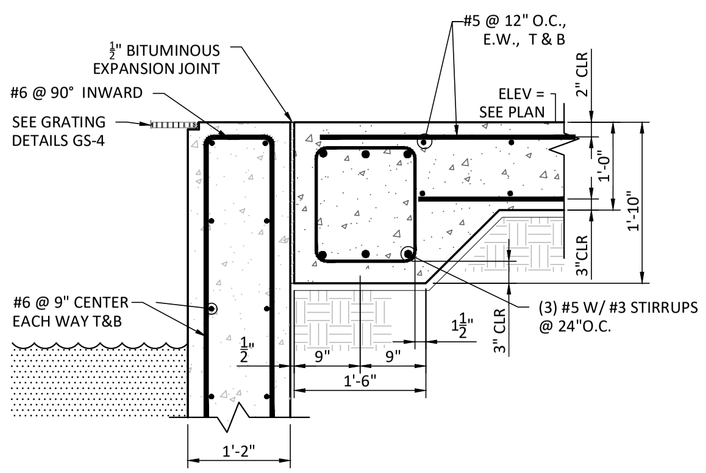

S-17 / S-1 CHANNEL WALL HEAD DETAIL
SCALE: 3/4" = 1'-0"

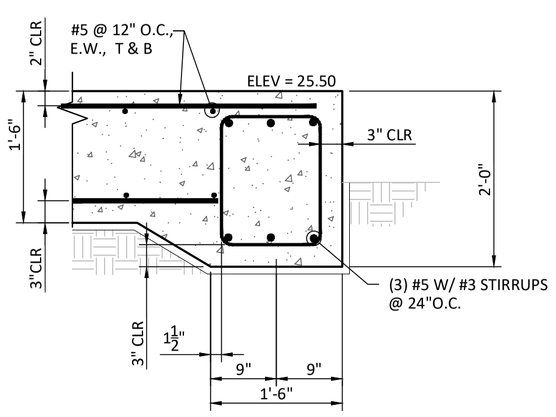

S-18 / S-1 GENERATOR SLAB SECTION
SCALE: 3/4" = 1'-0"

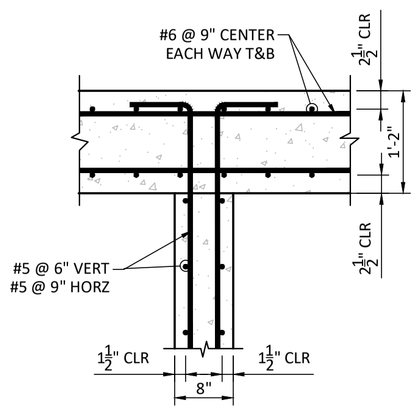

S-19 / S-2 CORNER PLAN DETAIL
SCALE: 3/4" = 1'-0"

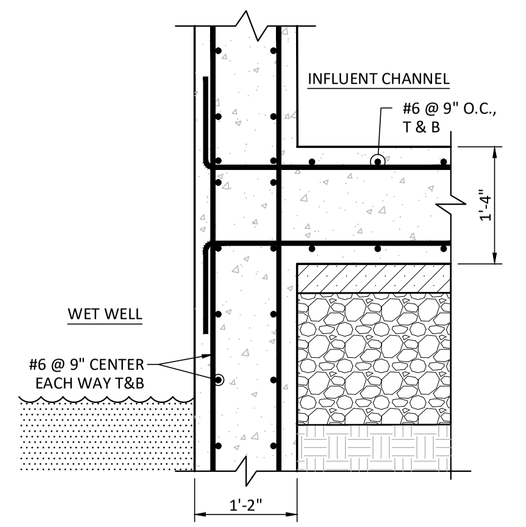

S-20 / S-2 WET WELL WALL HEAD DETAIL
SCALE: 3/4" = 1'-0"

No.	DESCRIPTION OF REVISION	DATE:

DEPT. OF UTILITIES
ST. TAMMANY PARISH GOVERNMENT
620 N. TYLER STREET
COVINGTON, LA 70433

DESIGNED BY:	TPD
DRAWN BY:	GAL
CHECKED BY:	TPD
SUBMITTED BY:	KYLE ASSOC.
PROJECT No.:	TU23000178
ISSUE DATE:	6/12/2024
APPROVED BY:	----
SHEET SIZE:	ANSI D
SCALE:	NTS

STATE OF LOUISIANA
THOMAS DYER
License No. 36743
06/12/24
PROFESSIONAL ENGINEER

WEST ST TAMMANY REGIONAL STF
INFLUENT PUMP STATION
COVINGTON, LOUISIANA
PROJECT No.: TU 23000178

DETAILS

SHEET NO.
GS-4

Plot Date: Tuesday, July 9, 2024 2:50:29 PM
User: Kevin Drane
File:N:\2023\23033 - West St Tammany Regional Sewer Treatment Facility\Drawings\Structural\23033-S-1.dwg

GENERAL SHEET NOTES

1. DEWATERING OF THE EXCAVATION AREA MAY BE NECESSARY TO ALLOW PROPER INSTALLATION OF THE WET WELL. SEE SPECIFICATION SECTION 02140-DEWATERING.
2. BRACED EXCAVATIONS MAY BE NECESSARY TO MAINTAIN A SAFE ACCESS TO THE WET WELL AREA. SEE SPECIFICATION SECTION 02160 - SHEETING, SHORING AND BRACING.
3. VERIFY ALL OPENINGS AND PENETRATIONS WITH MECHANICAL SHEET M-1.
4. SEE ELECTRICAL DRAWINGS FOR PANEL SIZE, CONTRACTOR TO SIZE MAINTENANCE SLAB ACCORDINGLY.
5. SEE DETAIL SHEETS FOR STEEL REBAR LOCATION AND DETAILS.
6. SEE NOTE F. 15, SHEET GS-1.

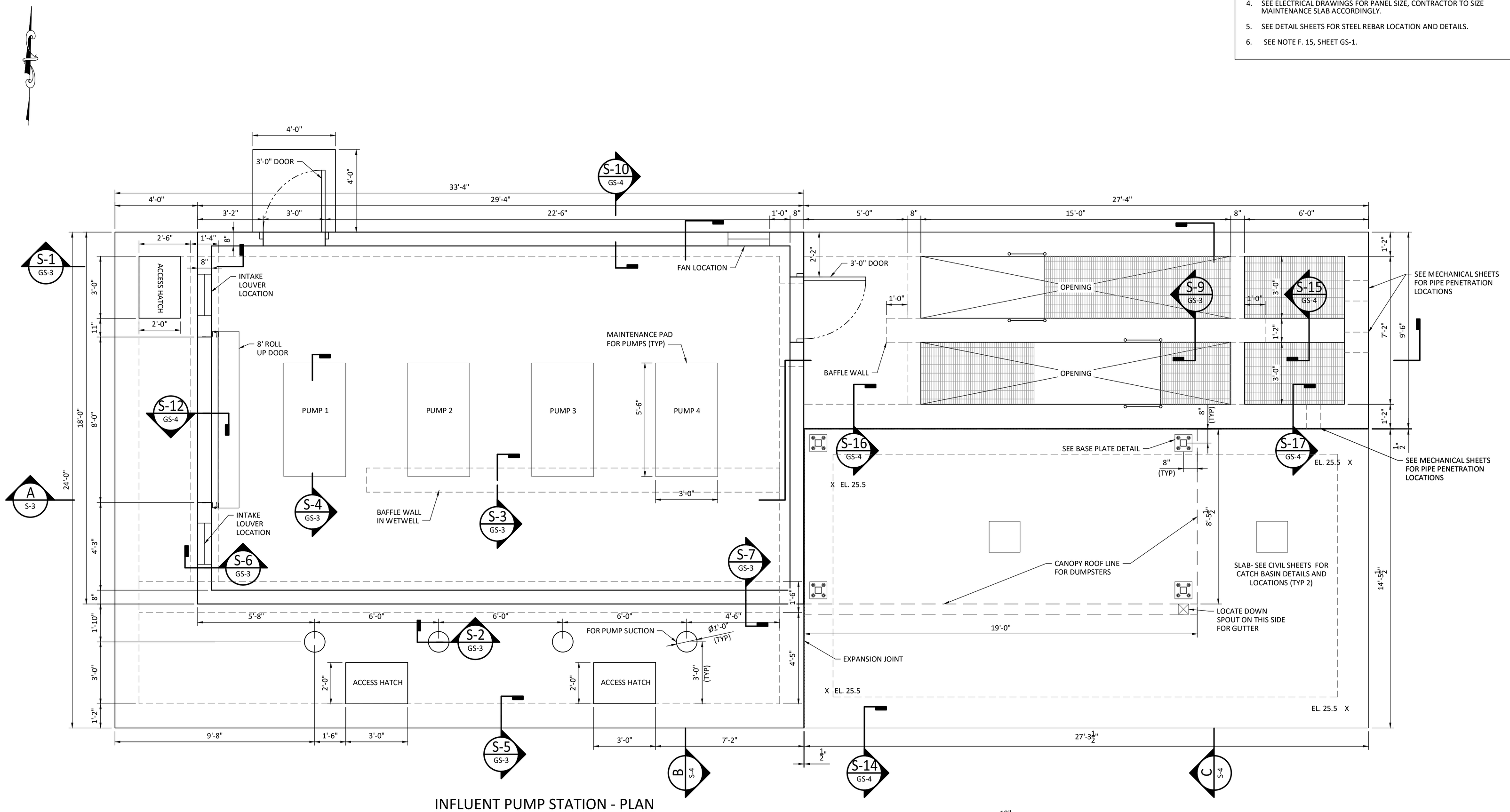

INFLUENT PUMP STATION - PLAN

3/8" = 1'-0"

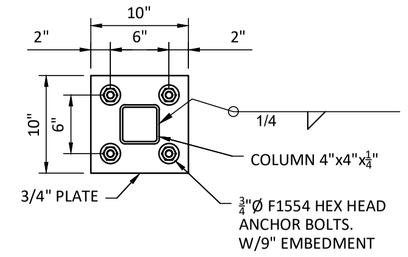

TYPICAL BASE PLATE DETAIL FOR HSS 4X4

1"=1'-0"

ST. TAMMANY PARISH GOVERNMENT

DEPT. OF UTILITIES
ST. TAMMANY PARISH GOVERNMENT
620 N. TYLER STREET
COVINGTON, LA 70433

No.	DESCRIPTION OF REVISION	DATE:

DESIGNED BY:	TPD
DRAWN BY:	GAL
CHECKED BY:	TPD
SUBMITTED BY:	KYLE ASSOC.
PROJECT No.:	TU23000178
ISSUE DATE:	6/12/2024
APPROVED BY:	— — —
SHEET SIZE:	ANSI D
SCALE:	3/8"=1'-0"

STATE OF LOUISIANA
THOMAS DYER
License No. 36743
06/12/24
PROFESSIONAL ENGINEER

WEST ST TAMMANY REGIONAL STF
INFLUENT PUMP STATION
COVINGTON, LOUISIANA
PROJECT No.: TU 23000178

INFLUENT PUMP STATION — PLAN

SHEET NO.
S–1

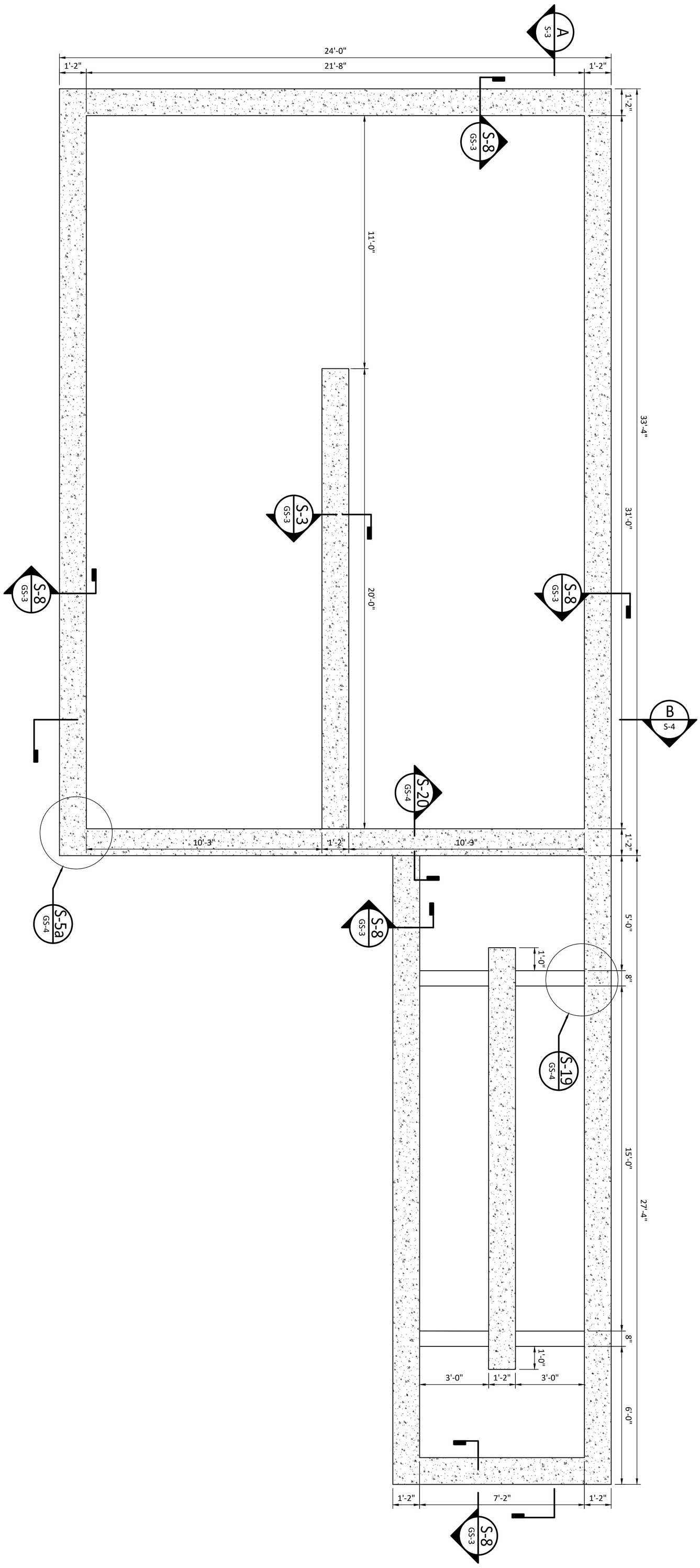

INFLUENT PUMP STATION FOUNDATION PLAN

3/8" = 1'-0"

GENERAL SHEET NOTES

1. DEWATERING OF THE EXCAVATION AREA MAY BE NECESSARY TO ALLOW PROPER INSTALLATION OF THE WET WELL. SEE SPECIFICATION SECTION 02140-DEWATERING.
2. BRACED EXCAVATIONS MAY BE NECESSARY TO MAINTAIN A SAFE ACCESS TO THE WET WELL AREA. SEE SPECIFICATION SECTION 02160 - SHEETING, SHORING AND BRACING.
3. VERIFY ALL OPENINGS AND PENETRATIONS WITH MECHANICAL SHEET M-1.
4. SEE ELECTRICAL DRAWINGS FOR PANEL SIZE, CONTRACTOR TO SIZE MAINTENANCE SLAB ACCORDINGLY.
5. SEE DETAIL SHEETS FOR STEEL REBAR LOCATION AND DETAILS.
6. SEE NOTE F. 15, SHEET GS-1.

DEPT. OF UTILITIES
ST. TAMMANY PARISH GOVERNMENT
620 N. TYLER STREET
COVINGTON, LA 70433

No.	DESCRIPTION OF REVISION	DATE:

DESIGNED BY:	TPD
DRAWN BY:	GAL
CHECKED BY:	TPD
SUBMITTED BY:	KYLE ASSOC.
PROJECT No.:	TU23000178
ISSUE DATE:	6/12/2024
APPROVED BY:	---
SHEET SIZE:	ANSI D
SCALE:	3/8"=1'-0"

STATE OF LOUISIANA
THOMAS DYER
License No. 36743
PROFESSIONAL ENGINEER
06/12/24

WEST ST TAMMANY REGIONAL STF
INFLUENT PUMP STATION
COVINGTON, LOUISIANA
PROJECT No.: TU 23000178

FOUNDATION PLAN

SHEET NO.
S-2

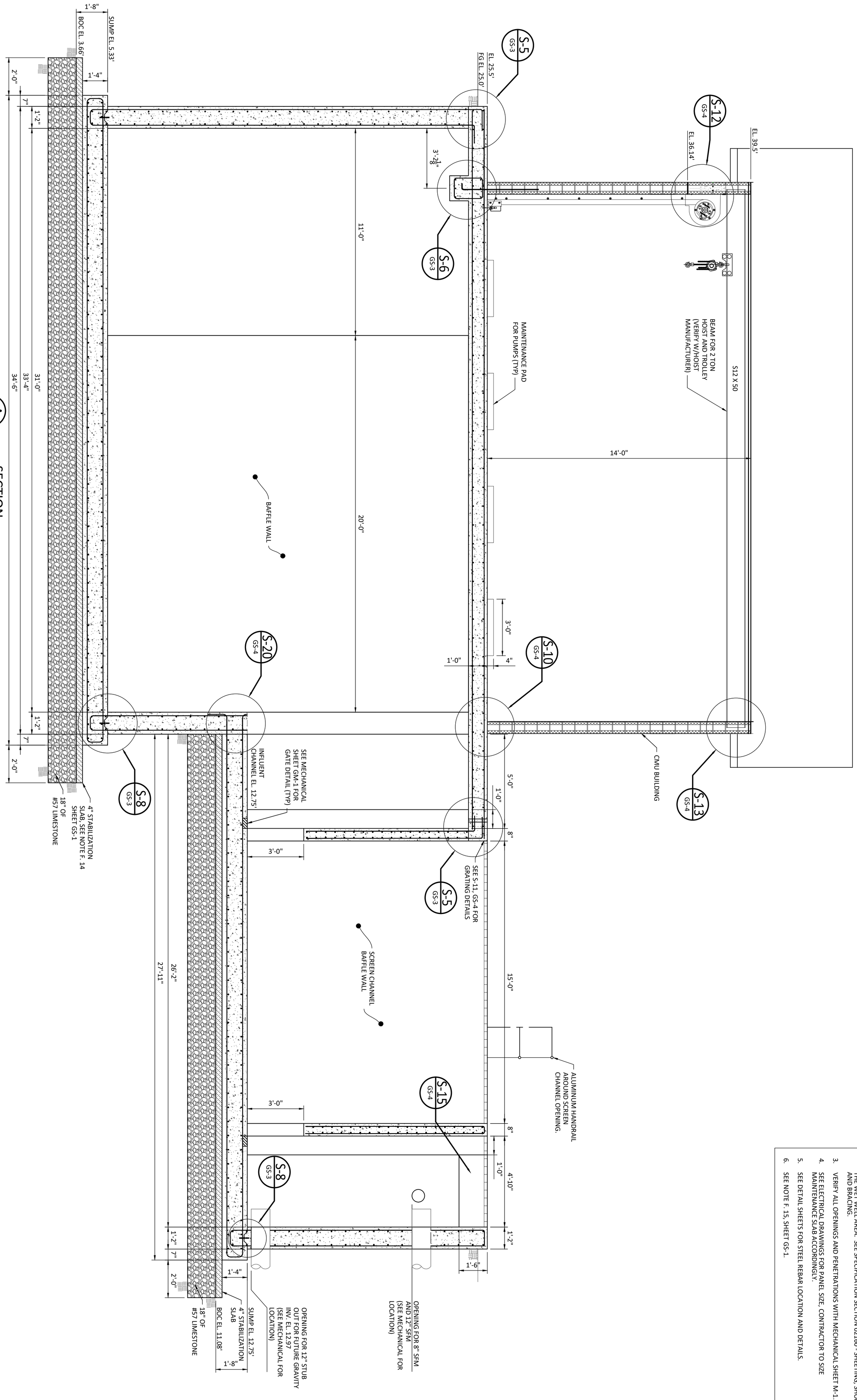

A S-1 SECTION

3/8" = 1'-0"

GENERAL SHEET NOTES

1. DEWATERING OF THE EXCAVATION AREA MAY BE NECESSARY TO ALLOW PROPER INSTALLATION OF THE WET WELL. SEE SPECIFICATION SECTION 02140-DEWATERING.
2. BRACED EXCAVATIONS MAY BE NECESSARY TO MAINTAIN A SAFE ACCESS TO THE WET WELL AREA. SEE SPECIFICATION SECTION 02160 - SHEETING, SHORING AND BRACING.
3. VERIFY ALL OPENINGS AND PENETRATIONS WITH MECHANICAL SHEET M-1.
4. SEE ELECTRICAL DRAWINGS FOR PANEL SIZE, CONTRACTOR TO SIZE MAINTENANCE SLAB ACCORDINGLY.
5. SEE DETAIL SHEETS FOR STEEL REBAR LOCATION AND DETAILS.
6. SEE NOTE F. 15, SHEET GS-1.

DEPT. OF UTILITIES
ST. TAMMANY PARISH GOVERNMENT
620 N. TYLER STREET
COVINGTON, LA 70433

No.	DESCRIPTION OF REVISION	DATE:

DESIGNED BY:	TPD
DRAWN BY:	GAL
CHECKED BY:	TPD
SUBMITTED BY:	KYLE ASSOC.
PROJECT No.:	TU23000178
ISSUE DATE:	6/12/2024
APPROVED BY:	---
SHEET SIZE:	ANSI D
SCALE:	3/8"=1'-0"

STATE OF LOUISIANA
THOMAS DYER
License No. 36743
PROFESSIONAL ENGINEER
06/12/24

WEST ST TAMMANY REGIONAL STF
INFLUENT PUMP STATION
COVINGTON, LOUISIANA
PROJECT No.: TU 23000178

INFLUENT PUMP STATION – SECTION

SHEET NO.
S-3

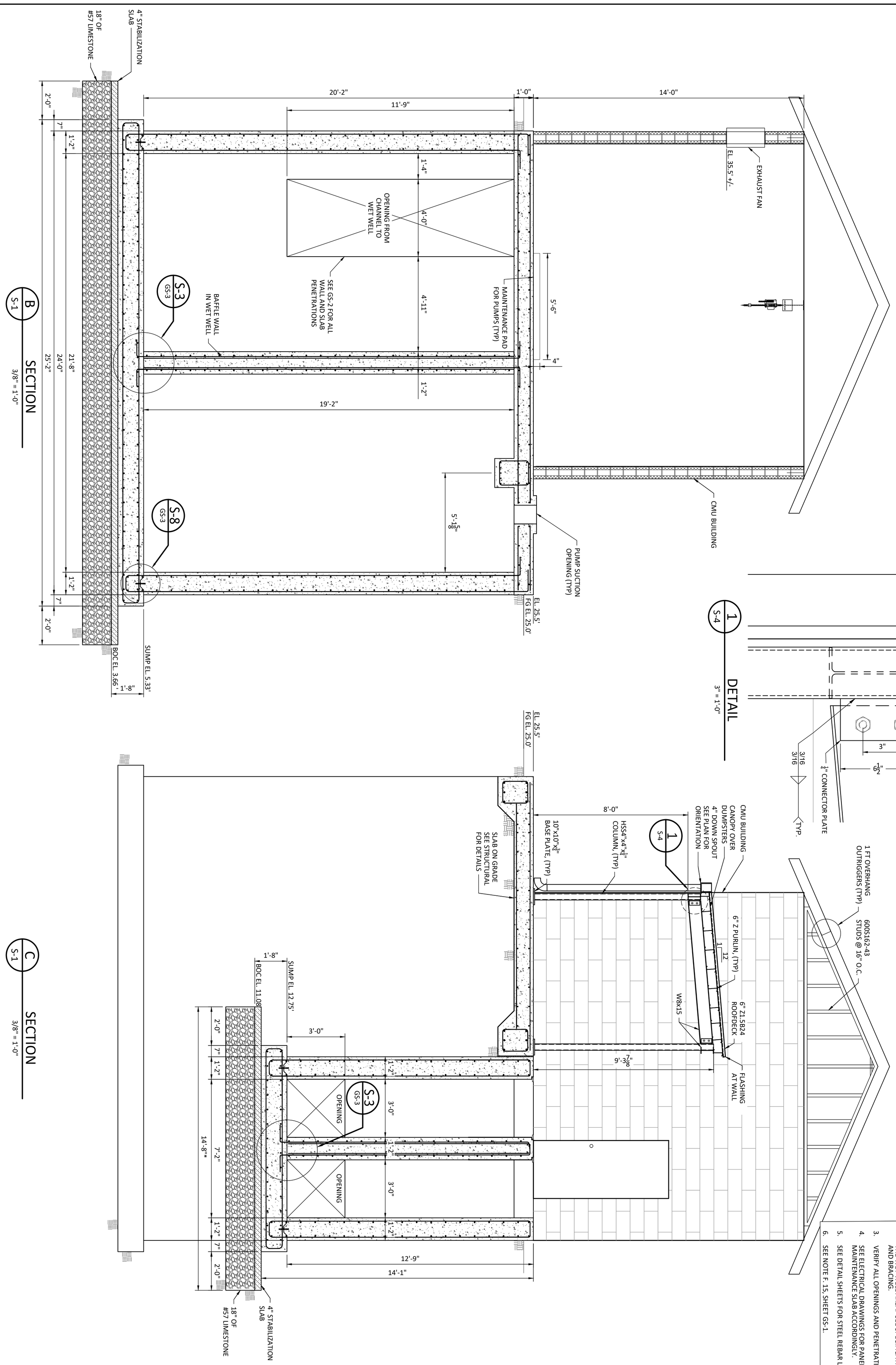

GENERAL SHEET NOTES

1. DEWATERING OF THE EXCAVATION AREA MAY BE NECESSARY TO ALLOW PROPER INSTALLATION OF THE WET WELL. SEE SPECIFICATION SECTION 02140-DEWATERING.
2. BRACED EXCAVATIONS MAY BE NECESSARY TO MAINTAIN A SAFE ACCESS TO THE WET WELL AREA. SEE SPECIFICATION SECTION 02160 - SHEETING, SHORING AND BRACING.
3. VERIFY ALL OPENINGS AND PENETRATIONS WITH MECHANICAL SHEET M-1.
4. SEE ELECTRICAL DRAWINGS FOR PANEL SIZE. CONTRACTOR TO SIZE MAINTENANCE SLAB ACCORDINGLY.
5. SEE DETAIL SHEETS FOR STEEL REBAR LOCATION AND DETAILS.
6. SEE NOTE F. 15, SHEET GS-1.

SHEET NO.	S–4

WEST ST TAMMANY REGIONAL STF
INFLUENT PUMP STATION
COVINGTON, LOUISIANA
PROJECT No.: TU 23000178

INFLUENT PUMP STATION – SECTION

STATE OF LOUISIANA
THOMAS DYER
License No. 36743
PROFESSIONAL ENGINEER
06/12/24

DESIGNED BY:	TPD
DRAWN BY:	GAL
CHECKED BY:	TPD
SUBMITTED BY:	KYLE ASSOC.
PROJECT No.:	TU23000178
ISSUE DATE:	6/12/2024
APPROVED BY:	---
SHEET SIZE:	ANSI D
SCALE:	3/8"=1'-0"

No.	DESCRIPTION OF REVISION	DATE:

DEPT. OF UTILITIES
ST. TAMMANY PARISH GOVERNMENT
620 N. TYLER STREET
COVINGTON, LA 70433

ELECTRICAL LEGEND

SYMBOL	DESCRIPTION
GFI	DUPLEX RECEPTACLE WITH INTEGRAL GROUND FAULT CIRCUIT INTERRUPTER WEATHER/TAMPER RESISTANT
XX	DUPLEX RECEPTACLE, 20A, 125V, 3W, GROUNDING TYPE. WEATHER/TAMPER RESISTANT
	4-PLEX RECEPTACLE 20A, 125V, 3W, GROUNDING WEATHER/TAMPER RESISTANT
	SPECIAL PURPOSE RECEPTACLE, AS NOTED.
	SIMPLEX RECEPTACLE, AS NOTED.
	DISCONNECT OR SAFETY SWITCH
	MAGNETIC STARTER
	COMBINATION STARTER/DISCONNECT
X	MOTOR (X = HORSEPOWER)
J	JUNCTION BOX
	GROUNDING PER 2005 NEC N.E.C. ARTICLE 250
	CONDUIT UP
	CONDUIT DOWN
	NEW PANELBOARD SURFACE MOUNTED
	NEW PANELBOARD RECESSED MOUNTED
	CEILING MOUNTED CAMERA
	DATA OUTLET - # INDICATES QUANTITY OF PORTS. DEFAULT IS TWO IF NO INDICATION
	FLOOR DATA OUTLET WITH 1" EMPTY CONDUIT TO AN ACCESSIBLE LOCATION ABOVE THE CEILING.
	HORN / LOUDSPEAKER
C	CLOCK
M	METER
C	CIRCUIT BREAKER
AP	ACCESS POINT
P	PULL BOX
T	TRANSFORMER
	GROUND ROD
TEL	TELEPHONE CABINET
	SECURITY SYSTEM MOTION DETECTOR, CEILING MOUNTED
VFD	VARIABLE FREQUENCY DRIVE (FURNISHED BY MECHANICAL; INSTALLED AND CONNECTED BY ELECTRICAL)
	CONDUIT SEAL
	LIGHTNING PROTECTION
	GROUND ROD, 3/4" X 10' COPPER
	GROUND WELL
	GROUNDING TEE CONNECTOR
	EXOTHERMIC CONNECTION
S	STANCHION MOUNTED LUMINIARE, SEE LUMINIARE SCHEDULE

*NOTE: NOT ALL SYMBOLS ARE USED.

ELECTRICAL LEGEND

SYMBOL	DESCRIPTION
XX	LIGHTING FIXTURE - SURFACE MOUNTED (XX - FIXTURE TYPE)
YZ	LIGHTING FIXTURE, EMERGENCY (XX - FIXTURE TYPE) Y = PANEL Z = CIRCUIT NUMBER
XX	FLOOD LIGHT (XX - FIXTURE TYPE)
XX	LIGHTING FIXTURE - POLE MOUNTED (XX - FIXTURE TYPE)
XX	LIGHTING FIXTURE - WALL MOUNTED (XX - FIXTURE TYPE)
	EXIT LIGHT WALL MTD. SHADING DENOTES SIDE WITH FACE.
	EXIT LIGHT CEILING MTD. ARROWS AS NOTED. SHADING DENOTES SIDE WITH FACE.
O	OCCUPANCY SENSOR, CEILING MOUNT
	LIGHT TRACK WITH FIXTURES
	EMERGENCY LIGHT - BATTERY UNIT
S	TOGGLE SWITCH, SINGLE POLE
S_X	TOGGLE SWITCH, SUBSCRIPT INDICATES DEVICE CONTROLLED
S_O	OCCUPANCY SENSOR, WALL MOUNT
S_D	DIMMER SWITCH, WALL MOUNT
A b H:3	SUSPENDED HI-BAY LED FIXTURE "A" - FIXTURE TYPE (SEE LIGHTING FIXTURE SCHEDULE) "b" - CONTROLLED BY SWITCH "b" "H" - PANEL "3" - CIRCUIT NUMBER

*NOTE: NOT ALL SYMBOLS ARE USED.

ELECTRICAL ABBREVIATIONS

ABBREVIATION	DESCRIPTION
A	AMPERE
ABC	ABOVE COUNTER
AC	ALTERNATING CURRENT
AF	AMPERE FUSE
AFC	4' ABOVE FINISHED COUNTER
AFF	ABOVE FINISHED FLOOR
AHJ	AUTHORITY HAVING JURISDICTION
AHU	AIR HANDLING UNIT
KAIC	AMPS INTERRUPTING CAPACITY x1000
AT	AMPERE TRIP
ANN	ANNUNCIATOR
APPROX	APPROXIMATE
ARCH	ARCHITECT
ATS	AUTOMATIC TRANSFER SWITCH
AWG	AMERICAN WIRE GAUGE
BLDG	BUILDING
BSMT	BASEMENT
C	CONDUIT
CAB	CABINET
CB	CIRCUIT BREAKER
CKT	CIRCUIT
CLG	CEILING
CL	CENTER LINE
CT	CURRENT TRANSFORMER
CU	COPPER
DISC	DISCONNECT
DN	DOWN
DWG	DRAWING
EA	EACH
EC	EMPTY CONDUIT WITH PULL WIRE
EDF	ELECTRIC DRINKING FOUNTAIN
EF	EXHAUST FAN
ELEV	ELEVATOR
EP	EXPLOSION-PROOF
EQPT	EQUIPMENT
EXTG	EXISTING
FA	FIRE ALARM
FACP	FIRE ALARM CONTROL PANEL
FCU	FAN COIL UNIT
FLA	FULL LOAD AMPS
FLR	FLOOR
GFI	GROUND FAULT INTERRUPTER
GND/GRD/G	GROUND
GRC	GALVANIZED RIGID STEEL CONDUIT
HT	HEIGHT
HTR	HEATER
HP	HORSE POWER
HW	HOT WATER
HWC	HOT WATER CIRCULATING
INCAND	INCANDESCENT
JB	JUNCTION BOX
KV	KILOVOLT
KVA	KILOVOLT-AMPERE
KW	KILOWATT
LFMC	LIQUIDTIGHT FLEXIBLE METAL CONDUIT
LTG	LIGHTING
MAX	MAXIMUM
MCB	MAIN CIRCUIT BREAKER
MCC	MOTOR CONTROL CENTER
MCCB	MOLDED CASE CIRCUIT BREAKER
MCM	CIRCULAR MILS, THOUSANDS
MCP	MOTOR CIRCUIT PROTECTOR
MECH	MECHANICAL
MFR	MANUFACTURER
MGAP	MEDICAL GAS ALARM PANEL
MLO	MAIN LUGS ONLY
MTD	MOUNTED
MTG	MOUNTING
NEC	NATIONAL ELECTRICAL CODE
NTS	NOT TO SCALE
PNL	PANEL
PH	PHASE
P	POLE
PFB	PROVISIONS FOR BREAKER
PA	PUBLIC ADDRESS
RECP	RECEPTACLE
REFRIG	REFRIGERATOR
REQD	REQUIRED
SN	SOLID NEUTRAL
SPKR	SPEAKER
SPEC	SPECIFICATION
SWBD	SWITCHBOARD
SWGR	SWITCHGEAR
TEL	TELEPHONE
TTB	TELEPHONE TERMINAL BOARD
TV	TELEVISION
TVSS	TRANSIENT VOLT. SURGE SUPPRESSOR
TYP	TYPICAL
UC	UNDER COUNTER
UON	UNLESS OTHERWISE NOTED
V	VOLT
VA	VOLTAMPERE
W	WATT
WH	WATER HEATER
WP	WEATHER-PROOF
W/	WITH
W/O	WITHOUT
XFMR	TRANSFORMER
XFR	TRANSFER

*NOTE: NOT ALL SYMBOLS ARE USED.

ELECTRICAL LEGEND

SYMBOL	DESCRIPTION
	EXPOSED CIRCUIT IN CONDUIT
	BELOW GRADE OR CONCEALED IN SLAB CIRCUIT IN CONDUIT
UE	UNDERGROUND
OHE	OVERHEAD ELECTRIC
G	UG BARE COPPER GROUNDING CABLE
	MATCHLINE
1"C., 3#8 & 1#10G.	1" CONDUIT W/THREE SIZE 8 AWG CONDUCTORS & ONE SIZE 10 AWG EQUIPMENT GROUND
PANEL: XX	PANEL = PANEL NAME BEING CIRCUITED TO. XX = CIRCUIT NUMBER, PROVIDE BRANCH WIRING BETWEEN DEVICES AND PANELBOARD AS REQUIRED FOR FULL FUNCTIONALITY

*NOTE: NOT ALL SYMBOLS ARE USED.

GENERAL SYMBOLS

SYMBOL	DESCRIPTION
	SECTION LETTER / INDICATES DRAWING SHEET ON WHICH SECTION IS SHOWN
1	KEY NOTE
C22	COLUMN REFERENCE
1	DRAWING REVISION NUMBER
	DRAWING REVISION CLOUD
# / DWG	DETAIL DETAIL NUMBER / DETAIL CALLOUT / INDICATES DRAWING SHEET ON WHICH DETAIL IS SHOWN

*NOTE: NOT ALL SYMBOLS ARE USED.

ELECTRICAL SPECIFICATIONS

COMPLY WITH THE ADOPTED EDITIONS THE NATIONAL ELECTRICAL CODE (NFPA 70) AND THE LIFE SAFETY CODE (NFPA 101): LOUISIANA STATE FIRE MARSHAL REQUIREMENTS: LOCAL REGULATORY AGENCIES: ALL APPLICABLE CODES AND STANDARDS.

ALL APPLICABLE PRODUCTS TO HAVE UL/ETL LABEL ATTACHED.

ARRANGE AND PAY FOR REQUIRED PERMITS, LICENSES, FEES, AND INSPECTIONS.

MATERIALS AND INSTALLATION

ALL MATERIAL SHALL BE NEW, UL/ETL LABELED, AS SPECIFIED.

EXTERIOR/EXPOSED TO WEATHER CONDUIT SHALL BE GALVANIZED RIGID STEEL. UNDERGROUND CONDUIT SHALL BE SCHEDULE 80 PVC, AND INSTALLED IN ACCORDANCE WITH NEC ARTICLE 230 AND 300.

WIRING DEVICES SHALL BE SPECIFICATION GRADE AS MANUFACTURED BY LEVITON, OR APPROVED EQUAL.

ALL LIGHTING FIXTURES SHALL BE AS SCHEDULED ON THE DRAWINGS, PROVIDED AND INSTALLED BY THE CONTRACTOR.

CONDUCTORS SHALL BE COPPER WITH TYPE THHN/THWN INSULATION.

DISTRIBUTION PANELS SHALL BE BOLT-ON CIRCUIT BREAKER TYPE WITH NEMA-4 ENCLOSURES.

EXTERIOR 120 VOLT RECEPTACLES SHALL BE MOUNTED VERTICALLY IN TYPE FD CAST ALUMINUM BOXES WITH CAST ALUMINUM, WHILE-IN-USE COVERS. MOUNT 24" A.F.F.

DISCONNECT SWITCHES SHALL BE HEAVY DUTY, FUSIBLE TYPE. PROVIDE UNISTRUT FRAMING AS REQUIRED FOR MOUNTING OF DISCONNECT SWITCHES.

WIREWAYS SHALL BE NEMA-3R WITH HINGED COVER, BAKED ENAMEL FINISH.

LIGHT SWITCHES SHALL BE 20 AMP, 120/277V, MOUNTED AT 48 INCHES FROM FINISHED FLOOR.

GROUNDING SHALL BE IN ACCORDANCE WITH ARTICLE 250 OF THE NATIONAL ELECTRICAL CODE.

PROVIDE ELECTRICAL CONNECTIONS TO ALL MECHANICAL EQUIPMENT AND EQUIPMENT FURNISHED UNDER OTHER SECTIONS.

PROVIDE ENGRAVED TAGS ON ALL PANEL BOARDS, TRANSOFRMERS, AND DISCONNECT SWITCHES INDICATING NAME, VOLTAGE, PHASE, AND FED FROM.

PROVIDE TYPEWRITTEN DIRECTORY CARDS IN ALL PANELBOARDS.

LABOR AND MATERIAL SHALL BE GUARANTEED FOR ONE (1) YEAR FROM DATE OF ACCEPTANCE.

GENERAL NOTES

1. ALL WORK SHALL BE INSTALLED PER LATEST ISSUE OF THE NEC IN USE BY ST. TAMMANY PARISH.
2. THE TERM "PROVIDE" MEANS TO FURNISH, INSTALL AND CONNECT.
3. COMPLY WITH ALL NATIONAL, STATE, CITY AND LOCAL CODES AND ORDNANCES HAVING JURISDICTION INCLUDING RULES AND REQUIREMENTS OF UTILITY SERVING AGENCY.
4. ALUMINUM CONDUCTORS SHALL NOT BE USED.
5. DESIGN DRAWINGS ARE DIAGRAMMATIC AND ARE ONLY INTENDED TO DEFINE THE BASIC FUNCTIONS REQUIRED. PROVIDE ALL LABOR, MATERIAL, TOOLS AND EQUIPMENT NECESSARY TO ACCOMPLISH THESE REQUIREMENTS. MINOR DEVIATIONS FROM THE DESIGN LAYOUT ARE ANTICIPATED AND ARE A PART OF THE WORK INCLUDED. HOWEVER NO CHANGES THAT ALTER THE CHARACTER OF THE WORK WILL BE PERMITTED.

ST. TAMMANY PARISH GOVERNMENT

DEPT. OF UTILITIES
ST. TAMMANY PARISH GOVERNMENT
620 N. TYLER STREET
COVINGTON, LA 70433

No.	DESCRIPTION OF REVISION	DATE:

DESIGNED BY: CS
DRAWN BY: EM
CHECKED BY: CS
SUBMITTED BY: KYLE ASSOC.
PROJECT No.: TU23000178
ISSUE DATE: 03/12/2024
APPROVED BY: ---
SHEET SIZE: ANSI D
SCALE:

STATE OF LOUISIANA
CHRISTIAN SCHUBE
License No. 32451
PROFESSIONAL ENGINEER
IN
ELECTRICAL ENGINEERING
03/12/2024

WEST ST TAMMANY PARISH WWTP
INFLUENT PUMP STATION
COVINGTON, LOUISIANA
PROJECT No.: TU 23000178

SYMBOL SCHEDULE, ABBR, & GENERAL NOTES

SHEET NO.
E-1

Xref ..\X-Ref's\...x-ref_KA_Border_22x34.dwg

GENERAL NOTES:

A. ALL WORK SHALL BE DONE IN ACCORDANCE WITH THE VERSION OF THE NATIONAL ELECTRICAL CODE IN USE BY ST. TAMMANY PARISH.

B. ALL ELECTRICAL EQUIPMENT SHALL BE INSTALLED AT MINIMUM ELEVATION AS DETERMINED BY CIVIL DRAWINGS.

C. SEE DRAWING E-11 FOR CONDUIT AND CABLE SCHEDULE.

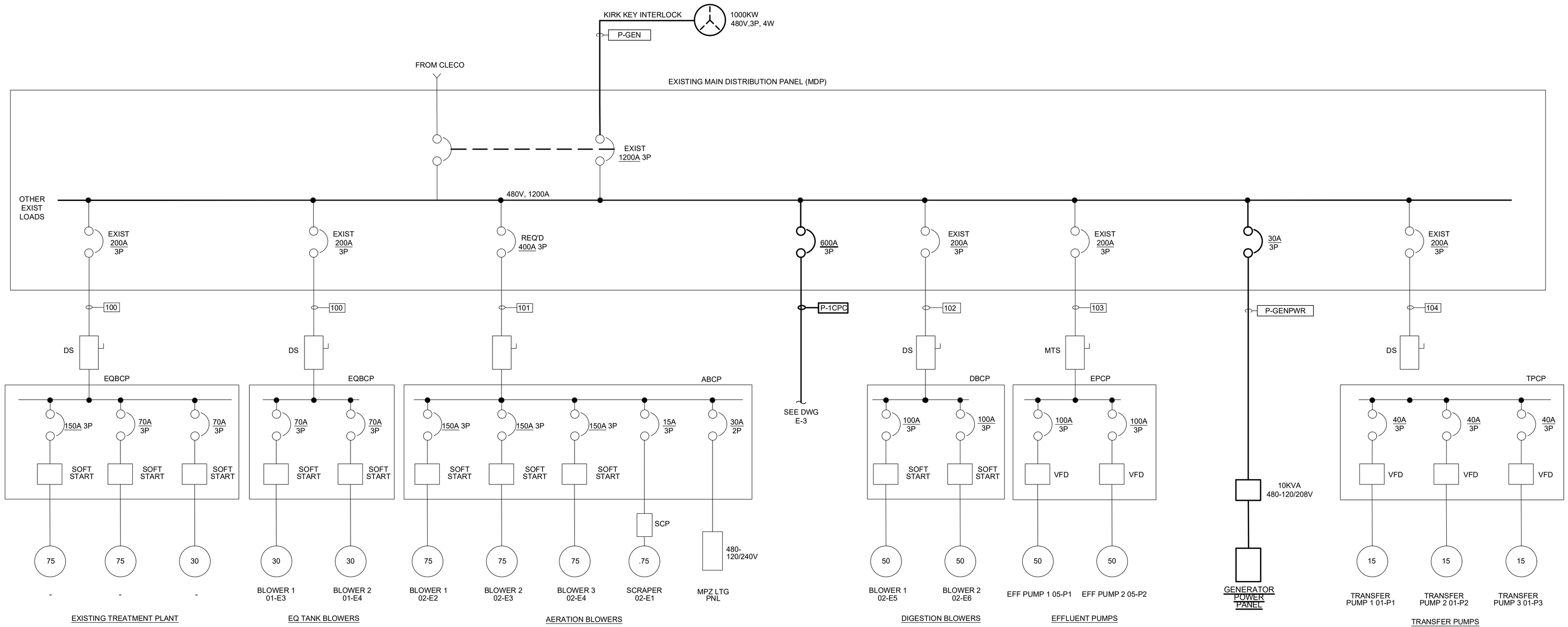

1 EXISTING ONE LINE DIAGRAM
SCALE: N.T.S.

DEPT. OF UTILITIES
ST. TAMMANY PARISH GOVERNMENT
620 N. TYLER STREET
COVINGTON, LA 70433

No.	DESCRIPTION OF REVISION	DATE:

DESIGNED BY: CS
DRAWN BY: EM
CHECKED BY: CS
SUBMITTED BY: KYLE ASSOC.
PROJECT No.: TU23000178
ISSUE DATE: 03/12/2024
APPROVED BY: —
SHEET SIZE: ANSI D
SCALE:

STATE OF LOUISIANA
CHRISTIAN T. SCHADE
License No. 32163
PROFESSIONAL ENGINEER
IN
ELECTRICAL ENGINEERING
03/12/2024

WEST ST TAMMANY PARISH WWTP
INFLUENT PUMP STATION
COVINGTON, LOUISIANA
PROJECT No.: TU 23000178

EXISTING ONE LINE DIAGRAM

SHEET NO.
E-2

GENERAL NOTES:

A. ALL WORK SHALL BE DONE IN ACCORDANCE WITH THE VERSION OF THE NATIONAL ELECTRICAL CODE IN USE BY ST. TAMMANY PARISH.

B. ALL ELECTRICAL EQUIPMENT SHALL BE INSTALLED AT MINIMUM ELEVATION AS DETERMINED BY CIVIL DRAWINGS.

C. SEE DRAWING E-11 FOR CONDUIT AND CABLE SCHEDULE.

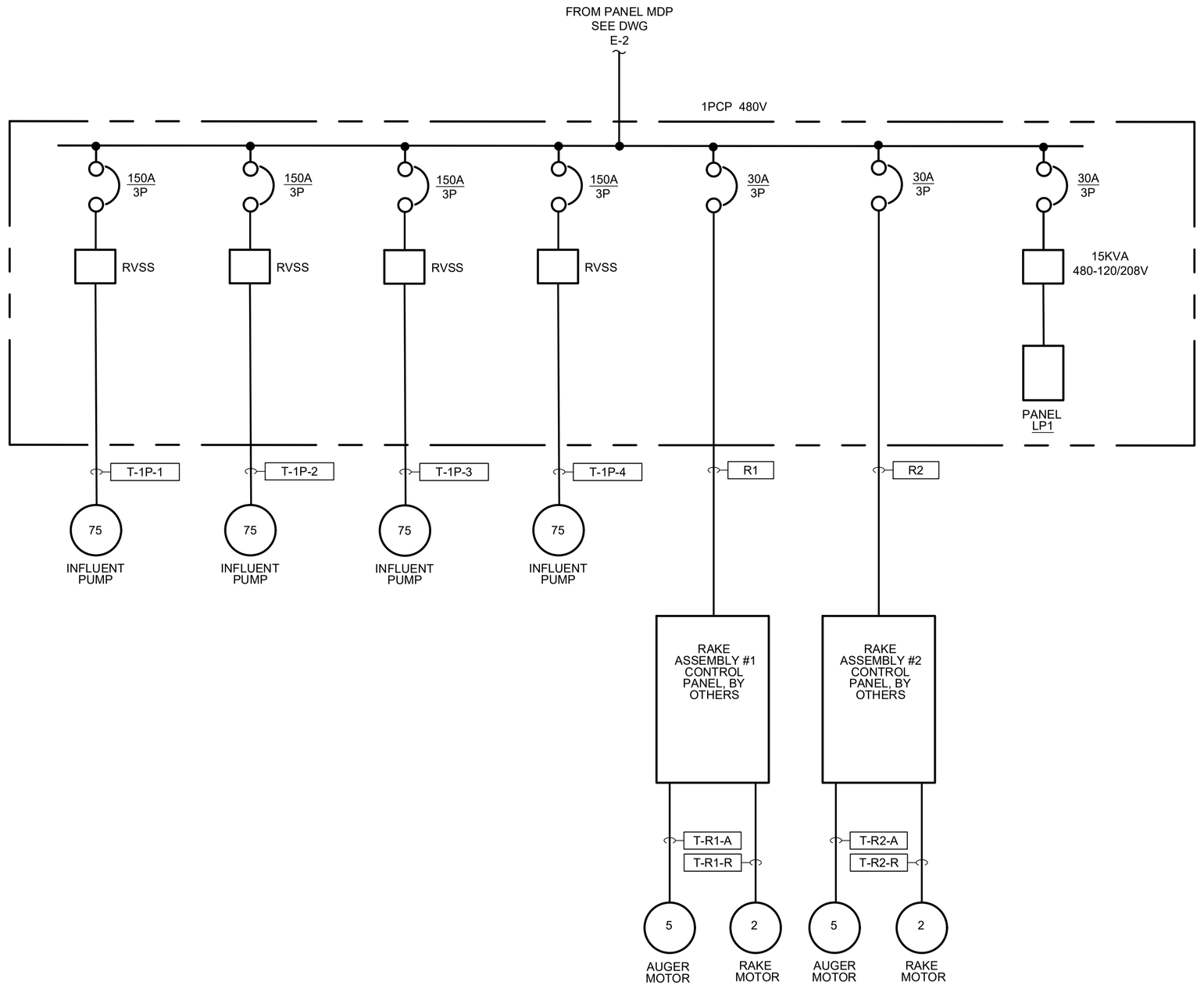

1 ONE LINE DIAGRAM - INFLUENT PUMPS
SCALE: N.T.S.

ST. TAMMANY PARISH GOVERNMENT

DEPT. OF UTILITIES
ST. TAMMANY PARISH GOVERNMENT
620 N. TYLER STREET
COVINGTON, LA 70433

No.	DESCRIPTION OF REVISION	DATE:

DESIGNED BY:	CS
DRAWN BY:	EM
CHECKED BY:	CS
SUBMITTED BY:	KYLE ASSOC.
PROJECT No.:	TU23000178
ISSUE DATE:	03/12/2024
APPROVED BY:	— —
SHEET SIZE:	ANSI D
SCALE:	

STATE OF LOUISIANA
CHRISTIAN SCHADE
License No. 32483
PROFESSIONAL ENGINEER
IN
ELECTRICAL ENGINEERING
03/12/2024

WEST ST TAMMANY PARISH WWTP
INFLUENT PUMP STATION
COVINGTON, LOUISIANA
PROJECT No.: TU 23000178

ONE LINE DIAGRAM - INFLUENT PUMPS

SHEET NO.
E-3

NAME: MDP

LOCATION: ELEC 204

VOLTAGE (L-L): 480
VOLTAGE (L-N): 277
NUMBER OF PHASES: 3
NEUTRAL BUS: YES
FEED-THRU LUGS: YES

BUS: 1200
MAIN: 1200
KAIC: 35
NEMA 1 SURFACE

CKT #	ITEM	AMP RATE	# POLE	LEFT LOADING (VA) A	LEFT LOADING (VA) B	LEFT LOADING (VA) C	RIGHT LOADING (VA) A	RIGHT LOADING (VA) B	RIGHT LOADING (VA) C	# POLE	AMP RATE	ITEM	CKT #
1	EXISITING	100	3							3	1200	MAIN	2
3													4
5													6
7	TPCP	125	3	47112									8
9					47112								10
11						47112							12
13	EXISTING 75, 75 30 HP BLOWER PUMPS	200	3	64294						3	1200	GENERATOR	14
15					64294								16
17						64294							18
19	EQPCP	200		22170									20
21					11085								22
23						22170							24
25	DPCP	200		443			86256			3	400	ABCP	26
27					443			86256					28
29						443			86256				30
31	SPACE						95910			**3**	**600 ***	**IPCP - NEW INFLUENT PUMP STATION**	32
33								95910					34
35									95910				36
37	SPACE						5000			**3**	**30 ***	**GENERATOR PANEL**	38
39								5000					40
41									5000				42
43	SPACE									3	-	SPACE	44
45													46
47													48
49	EPCP			47112									50
51					47112								52
53						47112							54
55	SPACE									3	-	SPACE	56
57													58
59													60
61	SPACE												62
63													64
65													66
67	SPACE									3	-	SPACE	68
69													70
71													72
				181131	170046	181131	187166	187166	187166				

(VA) (A)

TOTAL CONNECT LOAD: 1093806
PHASE A: 368297 1329
PHASE B: 357212 1289
PHASE C: 368297 1329

PEAK DEMAND LOAD: 1093806
PHASE A: 368297 1329
PHASE B: 357212 1289
PHASE C: 368297 1329

	LOAD	DVRSTY	DMND
1 LIGHTS	0	1.00	0
2 RECEPT <10KVA	0	1.00	0
RECEPT >10KVA	0	1.00	0
3 AHU BLOWER	0	1.00	0
4 CONDENSER	0	1.00	0
5 HEAT	0	1.00	0
6 HPU	0	1.00	0
7 WATER HEAT	0	1.00	0
8 REFRIGERATION	0	1.00	0
9 KITCHEN	0	1.00	0
10 ELEVATOR	0	1.00	0
11 MISC	0	1.00	0
12 SUBFEED DEM	1093806	1.00	1093806

NOTES:
* PROVIDE FINAL TYPEWRITTEN DIRECTORY INSIDE PANEL.
* PROVIDE ENGRAVED PLASTIC LABEL WITH PANEL DESIGNATION ON PANEL COVER.
* PROVIDE INTEGRAL TVSS - 120 KA

NOTE: PANEL MDP IS EXISTING. SCHEDULE ABOVE IS BASED ON CURSORY FIELD INSPECTION. CONTRACTOR SHALL VISIT THE SITE AND CONFIRM PRIOR TO BIDDING.
* - PROVIDE NEW BREAKERS AS INDICATED.

NAME: LP1

LOCATION: MCC SECTION 2

VOLTAGE (L-L): 208
VOLTAGE (L-N): 120
NUMBER OF PHASES: 3
NEUTRAL BUS: YES
FEED-THRU LUGS: YES

BUS: 100
MAIN: 60
KAIC: 22
NEMA 1 SURFACE

CKT #	ITEM	AMP RATE	# POLE	LEFT LOADING (VA) A	LEFT LOADING (VA) B	LEFT LOADING (VA) C	RIGHT LOADING (VA) A	RIGHT LOADING (VA) B	RIGHT LOADING (VA) C	# POLE	AMP RATE	ITEM	CKT #
1	BUILDING LIGHTS	20	1	619			1600			1	20	RECEPTACLES	2
3	EXHAUST FAN 1/3 HP	20	1		864			1600		1	20	RECEPTACLES	4
5	SCADA	20	1							1	20	PLC	6
7	SPARE	20	1							1	20	SPARE	8
9	SPARE	20	1							1	20	SPARE	10
11	SPACE	20	1							1	20	SPACE	12
13	SPACE	20	1							1	20	SPACE	14
15	SPACE	20	1							1	20	SPACE	16
17	SPACE	20	1							1	20	SPACE	18

(VA) (A)

TOTAL CONNECT LOAD: 4683
PHASE A: 2219 18
PHASE B: 2464 21
PHASE C: 0 0

PEAK DEMAND LOAD: 4683
PHASE A: 2219 18
PHASE B: 2464 21
PHASE C: 0 0

	LOAD	DVRSTY	DMND
1 LIGHTS	4683	1.00	4683
2 RECEPT <10KVA	0	1.00	0
RECEPT >10KVA	0	0.50	0
3 AHU BLOWER	0	1.00	0
4 CONDENSER	0	1.00	0
5 HEAT	0	1.00	0
6 HPU	0	1.00	0
7 WATER HEAT	0	1.00	0
8 REFRIGERATION	0	1.00	0
9 KITCHEN	0	1.00	0
10 ELEVATOR	0	1.00	0
11 MISC	0	1.00	0
12 SUBFEED DEM	0	1.00	0

NOTES:
* PROVIDE FINAL TYPEWRITTEN DIRECTORY INSIDE PANEL.
* PROVIDE ENGRAVED PLASTIC LABEL WITH PANEL DESIGNATION ON PANEL COVER.
* PROVIDE INTEGRAL TVSS - 120 KA

LIGHTING FIXTURE SCHEDULE

ID	TYPE	CATALOG NO.	VOLTAGE	WATTS	LUMENS/ WATT	CCT	DESCRIPTION
F1	LED STRIP	TAKTIK CAT# GAR-7 X50 40 1 3 1	120V	50	144	4000K	LED SURFACE MOUNTED FIXTURE, STAINLESS HOUSING, TVSS, WITH 5 YEAR WARRANTY, UL 1598 LISTED, IP6 RATED
F2	LED WALL PAK	WILL BRANDS CAT# NF-WCS-45-40-MV-4MSG-N5P-TLPC1	120V	43.7	144	4000K	LOW PROFILE LED WALL LUMINIARE, MULTIPLE DISTRIBUTIONS, MICRO STRIKE OPTICS WITH QUICK MOUNT ADAPTER
F3	LED STRIP	C-LITE C-VT-A-LVT4-S5L-SSCT-UL-GR	120V	25	140	3500K	VAPOR TIGHT LED STRIP, SURFACE MOUNT
EX	EXIT SIGN WITH FLOODLIGHTS	LUMENFOCUS CAT# EMEF 1 R 12V 15 B-SD	120V	6	N/A	N/A	EXIT SIGN WITH FLOODLIGHTS, NEMA 4X RATING, FULL LUMEN OUTPUT FOR 90 MINUTES, LONG LIFE LITHIUM PHOSPHATE BATTERY
P1	POLE MOUNTED LUMINIARE	WILL BRANDS NF-SLS-45-40-MV-4M-SG-6S-N5P-TLPC1	120V	43	144	4000K	POLE MOUNTED LUMINARE, SEE NOTE 2. POLE SHALL BE VS-SSSA-4040-11-AB-SG-D1-FBCS-NECHH-PRE075

NOTES
1. ALL FINISHES BY ARCHITECT/OWNER.

DEPT. OF UTILITIES
ST. TAMMANY PARISH GOVERNMENT
620 N. TYLER STREET
COVINGTON, LA 70433

No.	DESCRIPTION OF REVISION	DATE:

DESIGNED BY: CS
DRAWN BY: EM
CHECKED BY: CS
SUBMITTED BY: KYLE ASSOC.
PROJECT No.: TU23000178
ISSUE DATE: 03/12/2024
APPROVED BY: ---
SHEET SIZE: ANSI D
SCALE:

STATE OF LOUISIANA
CHRISTIAN J. SCHOEN
License No. 32403
PROFESSIONAL ENGINEER
IN
ELECTRICAL ENGINEERING
03/12/2024

WEST ST TAMMANY PARISH WWTP
INFLUENT PUMP STATION
COVINGTON, LOUISIANA
PROJECT No.: TU 23000178

PANEL & LIGHT FIXTURE SCHEDULES

SHEET NO.
E-4

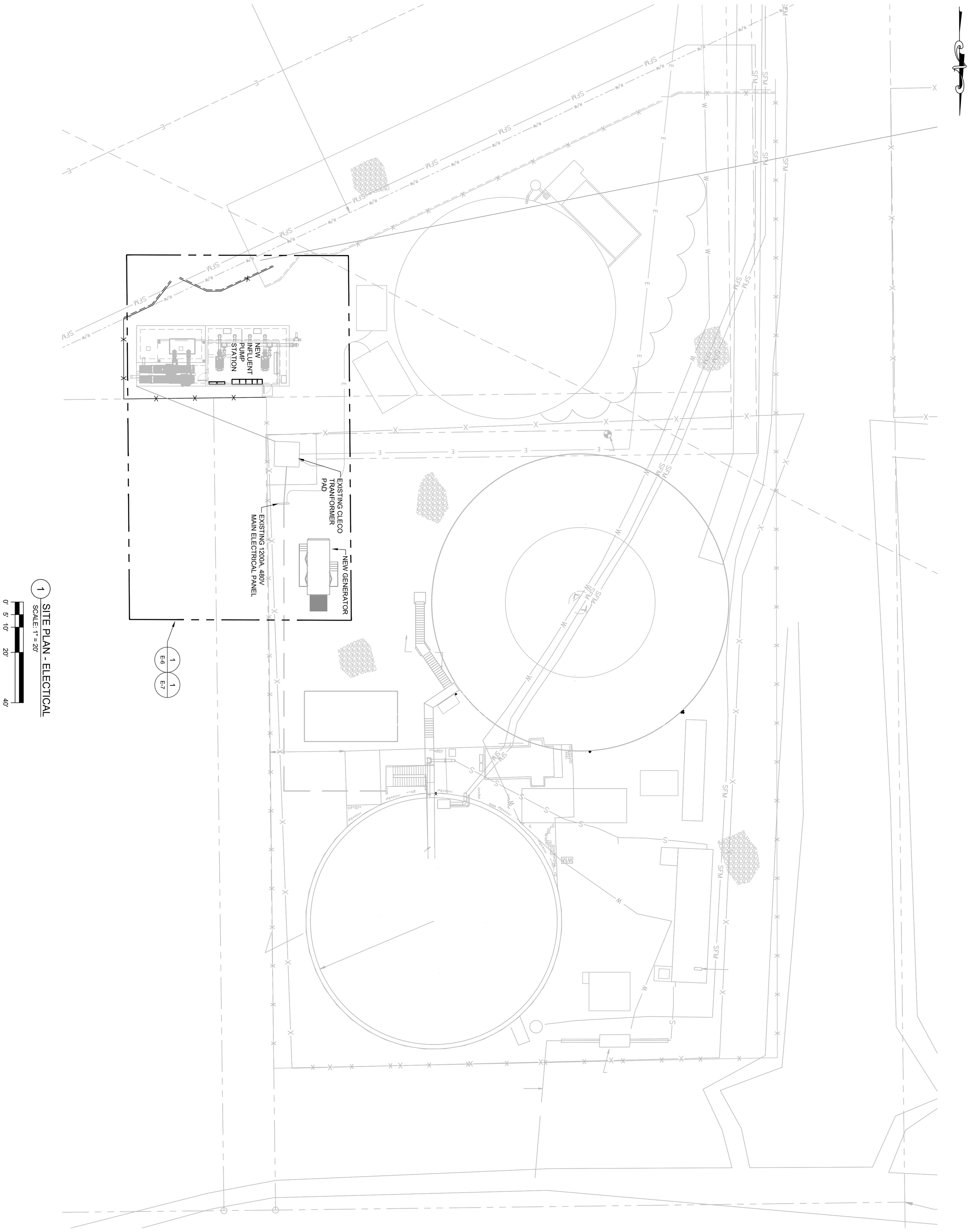

1 SITE PLAN - ELECTICAL
SCALE: 1" = 20'
0' 5' 10' 20' 40'

GENERAL NOTES:

A. ALL WORK SHALL BE DONE IN ACCORDANCE WITH THE VERSION OF THE NATIONAL ELECTRICAL CODE IN USE BY ST. TAMMANY PARISH.

B. ALL ELECTRICAL EQUIPMENT SHALL BE INSTALLED AT MINIMUM ELEVATION AS DETERMINED BY CIVIL DRAWINGS.

SHEET NO.
E-5

WEST ST TAMMANY PARISH WWTP
INFLUENT PUMP STATION
COVINGTON, LOUISIANA
PROJECT No.: TU 23000178

SITE PLAN - ELECTRICAL

STATE OF LOUISIANA
CHRISTIAN S. SCHADE
License No. 32483
PROFESSIONAL ENGINEER
IN
ELECTRICAL ENGINEERING
03/12/2024

DESIGNED BY:	CS
DRAWN BY:	EM
CHECKED BY:	CS
SUBMITTED BY:	KYLE ASSOC.
PROJECT No.:	TU23000178
ISSUE DATE:	03/12/2024
APPROVED BY:	---
SHEET SIZE:	ANSI D
SCALE:	

No.	DESCRIPTION OF REVISION	DATE:

DEPT. OF UTILITIES
ST. TAMMANY PARISH GOVERNMENT
620 N. TYLER STREET
COVINGTON, LA 70433

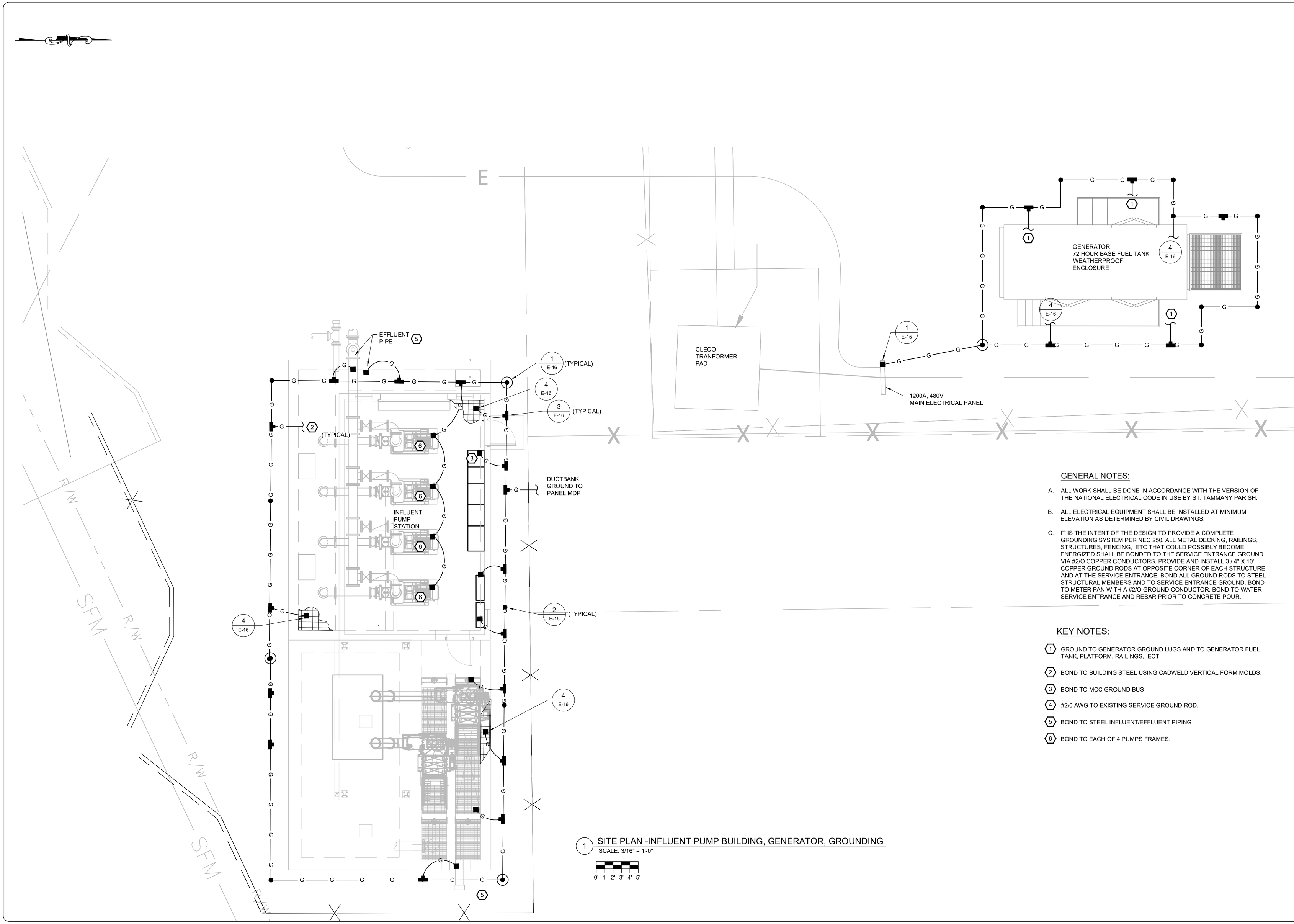

1 SITE PLAN -INFLUENT PUMP BUILDING, GENERATOR, GROUNDING

SCALE: 3/16" = 1'-0"

0' 1' 2' 3' 4' 5'

GENERAL NOTES:

A. ALL WORK SHALL BE DONE IN ACCORDANCE WITH THE VERSION OF THE NATIONAL ELECTRICAL CODE IN USE BY ST. TAMMANY PARISH.

B. ALL ELECTRICAL EQUIPMENT SHALL BE INSTALLED AT MINIMUM ELEVATION AS DETERMINED BY CIVIL DRAWINGS.

C. IT IS THE INTENT OF THE DESIGN TO PROVIDE A COMPLETE GROUNDING SYSTEM PER NEC 250. ALL METAL DECKING, RAILINGS, STRUCTURES, FENCING, ETC THAT COULD POSSIBLY BECOME ENERGIZED SHALL BE BONDED TO THE SERVICE ENTRANCE GROUND VIA #2/O COPPER CONDUCTORS. PROVIDE AND INSTALL 3 / 4" X 10' COPPER GROUND RODS AT OPPOSITE CORNER OF EACH STRUCTURE AND AT THE SERVICE ENTRANCE. BOND ALL GROUND RODS TO STEEL STRUCTURAL MEMBERS AND TO SERVICE ENTRANCE GROUND. BOND TO METER PAN WITH A #2/O GROUND CONDUCTOR. BOND TO WATER SERVICE ENTRANCE AND REBAR PRIOR TO CONCRETE POUR.

KEY NOTES:

1. GROUND TO GENERATOR GROUND LUGS AND TO GENERATOR FUEL TANK, PLATFORM, RAILINGS, ECT.
2. BOND TO BUILDING STEEL USING CADWELD VERTICAL FORM MOLDS.
3. BOND TO MCC GROUND BUS
4. #2/0 AWG TO EXISTING SERVICE GROUND ROD.
5. BOND TO STEEL INFLUENT/EFFLUENT PIPING
6. BOND TO EACH OF 4 PUMPS FRAMES.

DEPT. OF UTILITIES
ST. TAMMANY PARISH GOVERNMENT
620 N. TYLER STREET
COVINGTON, LA 70433

No.	DESCRIPTION OF REVISION	DATE:

DESIGNED BY:	CS
DRAWN BY:	EM
CHECKED BY:	CS
SUBMITTED BY:	KYLE ASSOC.
PROJECT No.:	TU23000178
ISSUE DATE:	03/12/2024
APPROVED BY:	---
SHEET SIZE:	ANSI D
SCALE:	

STATE OF LOUISIANA
CHRISTIAN T. SCHADE
License No. 32493
PROFESSIONAL ENGINEER
IN
ELECTRICAL ENGINEERING
03/12/2024

WEST ST TAMMANY PARISH WWTP
INFLUENT PUMP STATION
COVINGTON, LOUISIANA
PROJECT No.: TU 23000178

SITE PLAN -INFLUENT PUMP BUILDING, GENERATOR, GROUNDING

SHEET NO.
E-6

KEY NOTES:

1. FEEDER FROM PANEL MDP TO INFLUENT PUMP MCC.
2. GENERATOR FEEDER TO PANEL MDP. TERMINATE TO EXISTING 1200A CB WITH KIRK KEY INTERLOCK.
3. FEEDER TO GENERATOR POWER MINI POWER ZONE.
4. EXISTING CLECO PRIMARY PASSES THROUGH THIS AREA AND IS NOT CONCRETE OR CONDUIT ENCASED. CONTRACTOR SHALL USE EXTREME CAUTION WHEN DIGGING IN THIS AREA. CONTACT LOUISIANA ONE CALL TO PRECISELY MAP THE PRIMARY ROUTING.
5. CONTRACTOR SHALL RUN A 2" CONDUIT FROM PLC/SCADA SECTION OF MCC LINEUP TO THE VICINITY OF PANEL MDP FOR FUTURE CONTROL CONNECTIONS. CONFIRM LOCATION WITH OWNER.

GENERAL NOTES:

A. ALL WORK SHALL BE DONE IN ACCORDANCE WITH THE VERSION OF THE NATIONAL ELECTRICAL CODE IN USE BY ST. TAMMANY PARISH.

B. ALL ELECTRICAL EQUIPMENT SHALL BE INSTALLED AT MINIMUM ELEVATION AS DETERMINED BY CIVIL DRAWINGS.

C. SEE ONE LINE DRAWINGS FOR FEEDER SIZES.

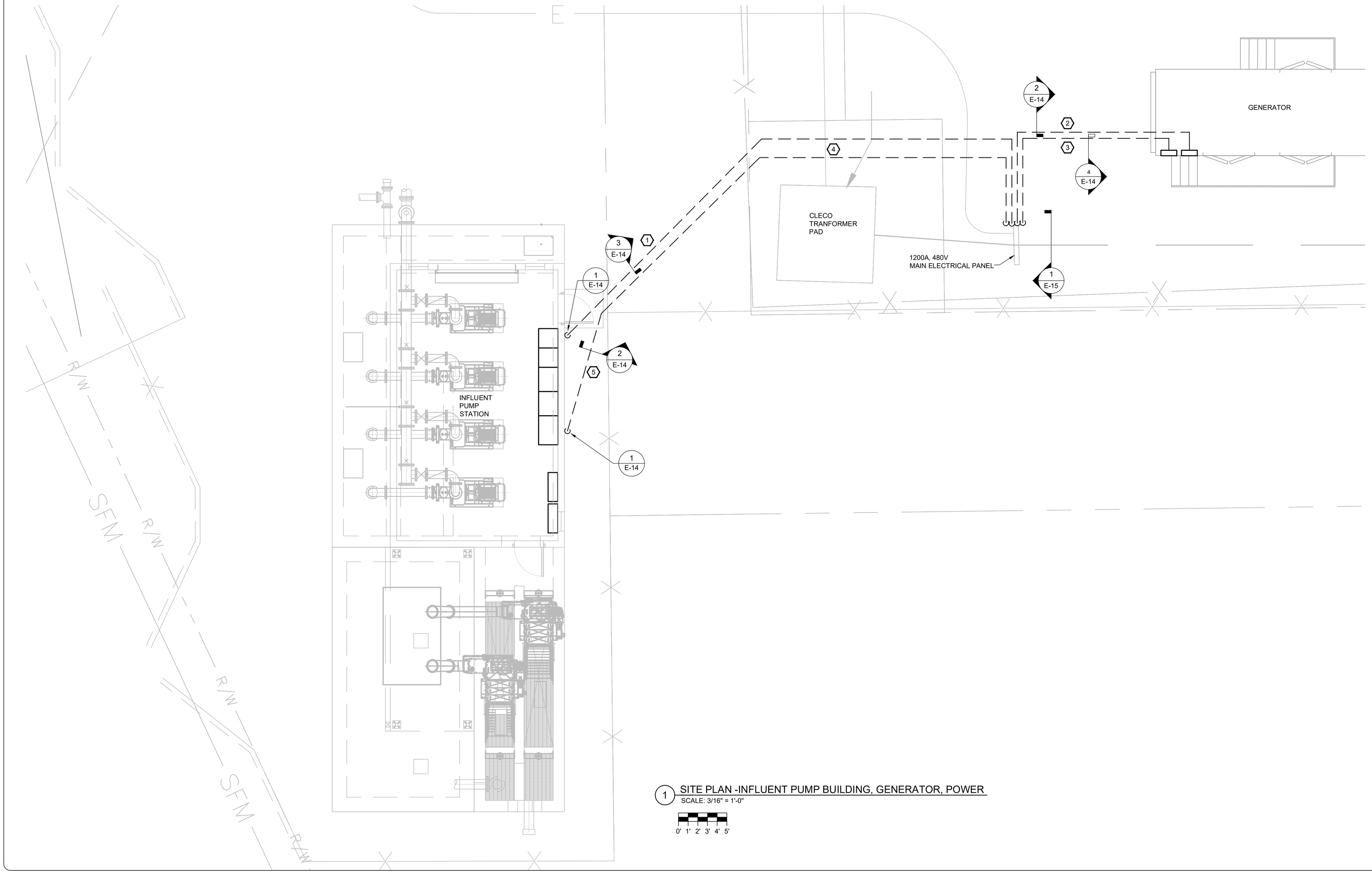

1 SITE PLAN -INFLUENT PUMP BUILDING, GENERATOR, POWER
SCALE: 3/16" = 1'-0"

0' 1' 2' 3' 4' 5'

ST. TAMMANY PARISH GOVERNMENT

DEPT. OF UTILITIES
ST. TAMMANY PARISH GOVERNMENT
620 N. TYLER STREET
COVINGTON, LA 70433

No.	DESCRIPTION OF REVISION	DATE:

DESIGNED BY: CS
DRAWN BY: EM
CHECKED BY: CS
SUBMITTED BY: KYLE ASSOC.
PROJECT No.: TU23000178

ISSUE DATE: 03/12/2024
APPROVED BY: — —
SHEET SIZE: ANSI D
SCALE:

STATE OF LOUISIANA
CHRISTIAN SCHADE
License No. 32483
PROFESSIONAL ENGINEER
IN
ELECTRICAL ENGINEERING
03/12/2024

WEST ST TAMMANY PARISH WWTP
INFLUENT PUMP STATION
COVINGTON, LOUISIANA
PROJECT No.: TU 23000178

SITE PLAN -INFLUENT PUMP BUILDING, GENERATOR, POWER

SHEET NO.
E-7

GENERAL NOTES:

A. ALL WORK SHALL BE DONE IN ACCORDANCE WITH THE VERSION OF THE NATIONAL ELECTRICAL CODE IN USE BY ST. TAMMANY PARISH.

B. ALL ELECTRICAL EQUIPMENT SHALL BE INSTALLED AT MINIMUM ELEVATION AS DETERMINED BY CIVIL DRAWINGS.

C. SEE ONE LINE DRAWINGS FOR FEEDER SIZES.

D. FINAL CONNECTION TO MOTORS SHALL BE MADE USING FLEXIBLE SEALTIGHT.

E. CONDUITS SHALL NOT BE RUN ALONG FLOORS WHERE THEY MAY PRESENT A TRIPPING HAZARD.

KEY NOTES:

1. FEEDER CONDUITS FROM MDP SHALL STUB UP ADJACENT TO BUILDING SLAB. ENTER BACKSIDE OF MCC VIA LB CONDULETS.
2. RAKE ASSEMBLY CONTROL PANELS SHALL BE PROVIDED BY OTHERS. CONTRACTOR SHALL RUN FEEDERS FROM MCC AND T LEADS TO RAKE ASSEMBLY MOTORS. EACH ASSEMBLY HAS A 5 HP PUMP MOTOR AND A 2 HP RAKE DRIVE MOTOR. CONDUITS EXITING THE INFLUENT PUMP BUILDING SHALL HAVE SEAL OFF FITTINGS.
3. PROVIDE CONDUIT TEE SUPPORT WHERE SHOWN TO SUPPORT OVERHEAD CONDUIT. CONDUIT RUNS SHALL TURN 90 DEGREES DOWN PAST TEE SUPPORT AND EXTEND TO EACH RAKE ASSEMBLY MOTOR.
4. RUN 2" CONDUIT IN VICINITY OF FROM SCADA/PLC SECTION OF MCC TO MDP AS SHOWN ON DWG E-7.

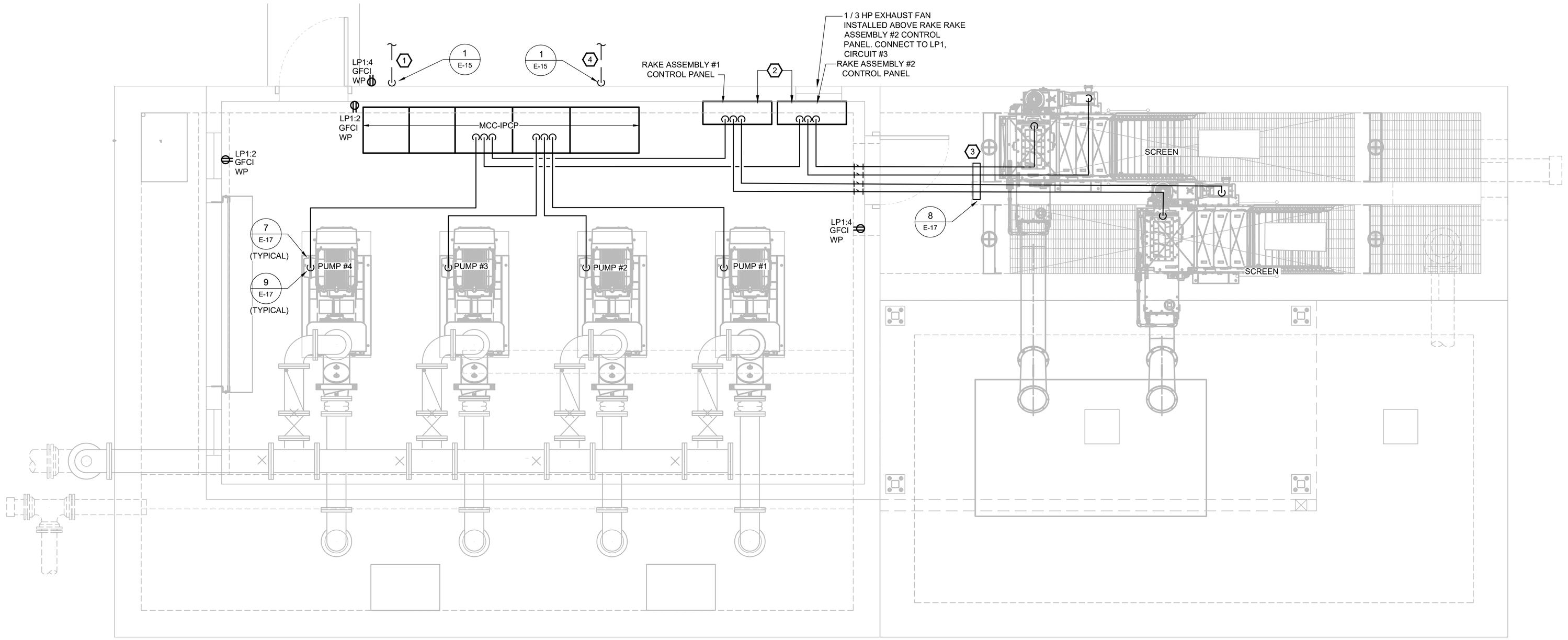

1 INFLUENT PUMP BUILDING PLAN - POWER
SCALE: 3/8" = 1'-0"

0' 1' 2' 3' 4' 5'

ST. TAMMANY PARISH GOVERNMENT

DEPT. OF UTILITIES
ST. TAMMANY PARISH GOVERNMENT
620 N. TYLER STREET
COVINGTON, LA 70433

No.	DESCRIPTION OF REVISION	DATE:

DESIGNED BY:	CS
DRAWN BY:	EM
CHECKED BY:	CS
SUBMITTED BY:	KYLE ASSOC.
PROJECT No.:	TU23000178
ISSUE DATE:	03/12/2024
APPROVED BY:	— —
SHEET SIZE:	ANSI D
SCALE:	

STATE OF LOUISIANA
CHRISTIAN SCHUBE
License No. 32483
PROFESSIONAL ENGINEER
IN
ELECTRICAL ENGINEERING
03/12/2024

WEST ST TAMMANY PARISH WWTP
INFLUENT PUMP STATION
COVINGTON, LOUISIANA
PROJECT No.: TU 23000178

INFLUENT PUMP BUILDING PLAN - POWER

SHEET NO.
E-8

GENERAL NOTES:

A. ALL WORK SHALL BE DONE IN ACCORDANCE WITH THE VERSION OF THE NATIONAL ELECTRICAL CODE IN USE BY ST. TAMMANY PARISH.

B. ALL ELECTRICAL EQUIPMENT SHALL BE INSTALLED AT MINIMUM ELEVATION AS DETERMINED BY CIVIL DRAWINGS.

C. EXIT SIGNS SHALL BE POWERED FROM THE UNSWITCHED LIGHTING CIRCUIT.

D. SEE LIGHT FIXTURE SCHEDULE DRAWING E-4.

KEY NOTES:

1. INTERIOR AND EXTERIOR LIGHTS SHALL BE CONTROLLED BY 3 WAY SWITCHES AT EACH ENTRANCE. SUBSCRIPT "a" AND "b" INDICATED FIXTURES CONTROLLED BY SWITCH. LP-1 INDICATES CIRCUIT IN PANEL LP.
2. EXTEND LEADS FROM RAKE CONTROL PANELS TO RAKE MOTORS.
3. POLE MOUNTED LUMINAIRE SHALL BE CONTROLLED BYPHOTOCELL. CONNECT TO 120 V 20 AMP CIRCUIT IN PANEL LP1.

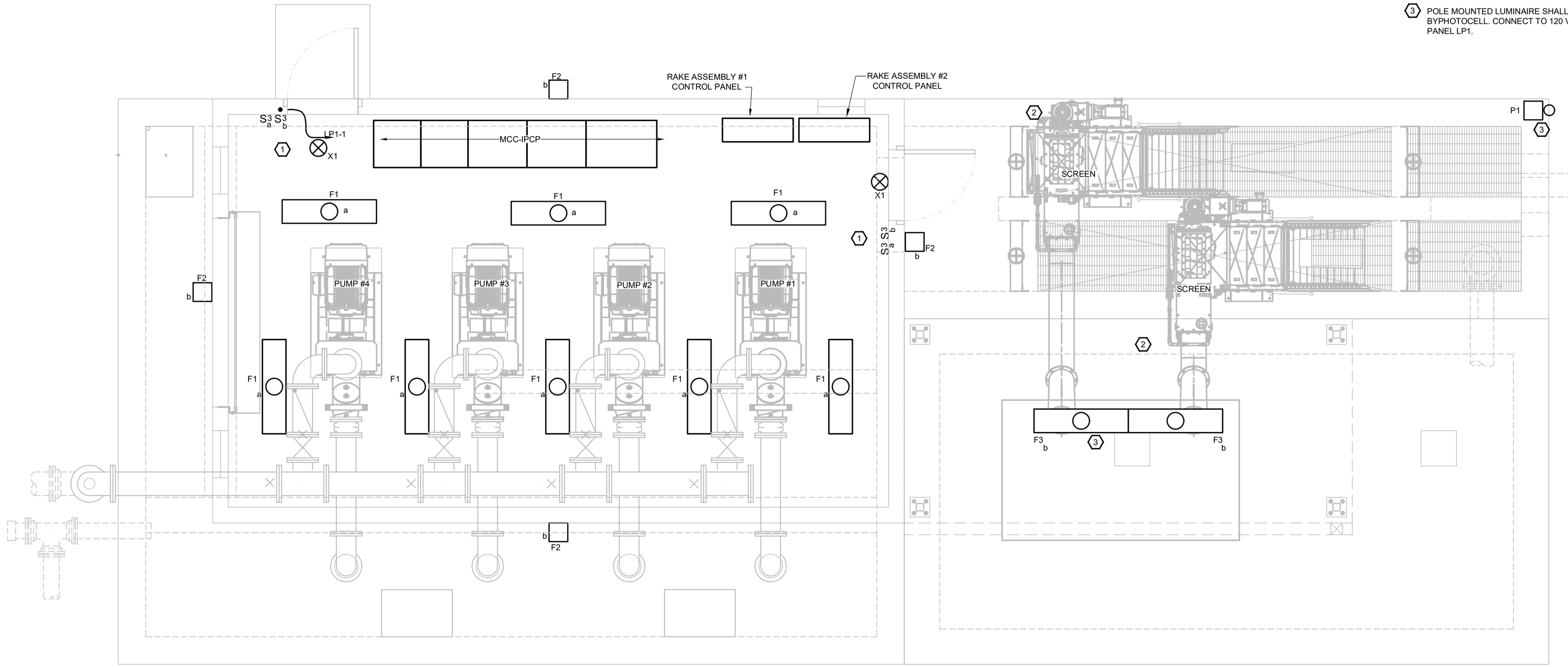

1 INFLUENT PUMP BUILDING PLAN - LIGHTING
SCALE: 3/8" = 1'-0"

0' 1' 2' 3' 4' 5'

ST. TAMMANY PARISH GOVERNMENT

DEPT. OF UTILITIES
ST. TAMMANY PARISH GOVERNMENT
620 N. TYLER STREET
COVINGTON, LA 70433

No.	DESCRIPTION OF REVISION	DATE:

DESIGNED BY: CS
DRAWN BY: EM
CHECKED BY: CS
SUBMITTED BY: KYLE ASSOC.
PROJECT No.: TU23000178
ISSUE DATE: DATE: 03/12/2024
APPROVED BY: — —
SHEET SIZE: ANSI D
SCALE:

STATE OF LOUISIANA
CHRISTIAN R. SCHUBE
License No. 32483
PROFESSIONAL ENGINEER
IN
ELECTRICAL ENGINEERING
03/12/2024

WEST ST TAMMANY PARISH WWTP
INFLUENT PUMP STATION
COVINGTON, LOUISIANA
PROJECT No.: TU 23000178

INFLUENT PUMP BUILDING PLAN - LIGHTING

SHEET NO.
E-9

GENERAL NOTES:

A. ALL WORK SHALL BE DONE IN ACCORDANCE WITH THE VERSION OF THE NATIONAL ELECTRICAL CODE IN USE BY ST. TAMMANY PARISH.

B. ALL ELECTRICAL EQUIPMENT SHALL BE INSTALLED AT MINIMUM ELEVATION AS DETERMINED BY CIVIL DRAWINGS.

C. CONDUITS SHALL NOT BE RUN ALONG FLOORS WHERE THEY MAY PRESENT A TRIPPING HAZARD.

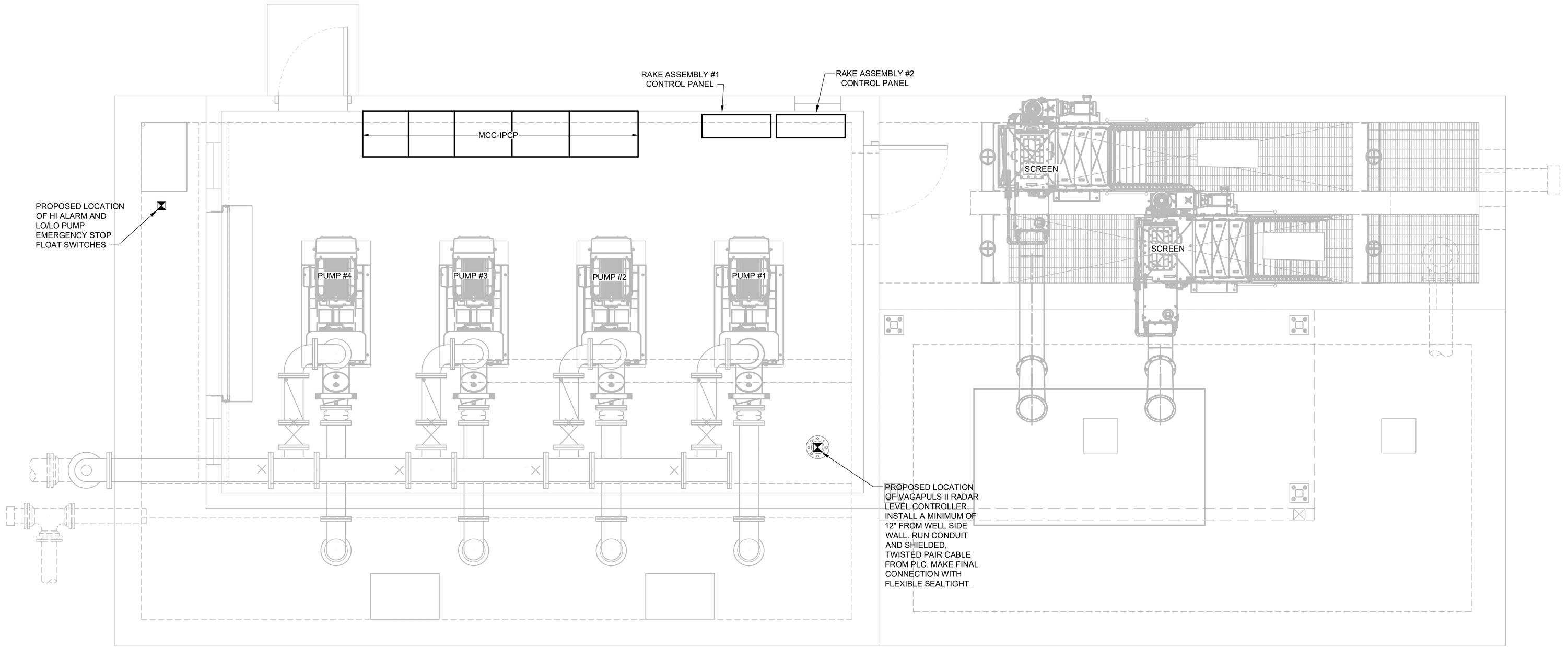

1 INFLUENT PUMP PLATFORM PLAN - INSTRUMENTATION
SCALE: 3/8" = 1'-0"

0' 1' 2' 3' 4' 5'

ST. TAMMANY PARISH GOVERNMENT

DEPT. OF UTILITIES
ST. TAMMANY PARISH GOVERNMENT
620 N. TYLER STREET
COVINGTON, LA 70433

No.	DESCRIPTION OF REVISION	DATE:

DESIGNED BY: CS
DRAWN BY: EM
CHECKED BY: CS
SUBMITTED BY: KYLE ASSOC.
PROJECT No.: TU23000178
ISSUE DATE: 03/12/2024
APPROVED BY: ---
SHEET SIZE: ANSI D
SCALE:

STATE OF LOUISIANA
CHRISTIAN T. SCHUDE
License No. 32483
PROFESSIONAL ENGINEER
IN
ELECTRICAL ENGINEERING
03/12/2024

WEST ST TAMMANY PARISH WWTP
INFLUENT PUMP STATION
COVINGTON, LOUISIANA
PROJECT No.: TU 23000178

INFLUENT PUMP PLATFORM PLAN - INSTRUMENTATION

SHEET NO.
E-10

POWER CONDUIT AND CABLE SCHEDULE

CABLE #	VOLTAGE	CONDUIT SIZE	WIRE AND CABLE INFORMATION			FROM	TO	NOTES
			POWER		GROUND WIRE			
			QUANTITY AND SIZE	TYPE				
P-IPCP	480	2 -3"	2 SETS -3- 350 KCMIL PER PHASE	THHN	2 SETS-#1 AWG	MDP	1PCP	
T-IP-1	480	2"	3 - 1/O	THHN	#6	1PCP	INFLUENT PUMP IP-1	
T-IP-2	480	2"	3 - 1/O	THHN	#6	1PCP	INFLUENT PUMP IP-1	
T-IP-3	480	2"	3 - 1/O	THHN	#6	1PCP	INFLUENT PUMP IP-1	
T-IP-4	480	2"	3 - 1/O	THHN	#6	1PCP	INFLUENT PUMP IP-1	
P-GEN	480	3-4"	3 SETS - 3#600 KCMIL PER PHASE	THHN	3 SETS -3/O	GENERATOR BREAKER	MDP	
R1	480	1"	3-#10 AWG	THHN	#10 AWG	1PCP	RAKE ASSEMBLY #1	
R2	480	1"	3-#10 AWG	THHN	#10 AWG	1PCP	RAKE ASSEMBLY #2	
P-GENPWR	480	1"	3-#10 AWG	THHN	#10 AWG	MDP	GENERATOR POWER PANEL	
T-R1-A	480	3/4"	3-#12 AWG	THHN	#12 AWG	RAKE ASSEMBLY #1 CONTROL PANEL	RAKE #1 AUGER MOTOR	
T-R1-R	480	3/4"	3-#12 AWG	THHN	#12 AWG	RAKE ASSEMBLY #1 CONTROL PANEL	RAKE #1 RAKE MOTOR	
T-R2-A	480	3/4"	3-#12 AWG	THHN	#12 AWG	RAKE ASSEMBLY #2 CONTROL PANEL	RAKE #2 AUGER MOTOR	
T-R2-R	480	3/4"	3-#12 AWG	THHN	#12 AWG	RAKE ASSEMBLY #2 CONTROL PANEL	RAKE #2 RAKE MOTOR	
-	-	-	-	-	-	-	-	

1 CONDUIT AND CABLE SCHEDULE - ELECTRICAL
SCALE: NONE

ST. TAMMANY PARISH GOVERNMENT

DEPT. OF UTILITIES
ST. TAMMANY PARISH GOVERNMENT
620 N. TYLER STREET
COVINGTON, LA 70433

No.	DESCRIPTION OF REVISION	DATE:

DESIGNED BY: CS
DRAWN BY: EM
CHECKED BY: CS
SUBMITTED BY: KYLE ASSOC.
PROJECT No.: TU23000178
ISSUE DATE: 03/12/2024
APPROVED BY: ---
SHEET SIZE: ANSI D
SCALE:

STATE OF LOUISIANA
CHRISTIAN J. SCHOEN
License No. 32403
PROFESSIONAL ENGINEER
IN
ELECTRICAL ENGINEERING
03/12/2024

WEST ST TAMMANY PARISH WWTP
INFLUENT PUMP STATION
COVINGTON, LOUISIANA
PROJECT No.: TU 23000178

CONDUIT AND CABLE SCHEDULE - ELECTRICAL

SHEET NO.
E-11

CONTROL SYSTEM CONDUIT AND CABLE SCHEDULE

CABLE #	VOLTAGE	CONDUIT SIZE	WIRE AND CABLE INFORMATION			FROM	TO	NOTES
			POWER		GROUND WIRE			
			QUANTITY AND SIZE	TYPE				
C-RVSS 1-RN	24VDC	N/A	2 -#16 600V RATED	THHN	N/A	PLC	PUMP #1 RVSS (START)	
I- RVSS 1-CT	0-10 VDC	N/A	1 PR #18 600V SHIELDED	INSTRUMENT CABLE	N/A	PLC	PUMP #1 RVSS (CURRENT)	
D-RVSS 1- CAT5	DATA	N/A	CAT 5 24AWG 600V NETWORK CABLE	SHIELDED DATA CABLE	N/A	PLC ETHERNET SWITCH	PUMP #1 RVSS	
-	-	-	-	-	-	-	-	
-	-	-	-	-	-	-	-	
C-RVSS 2-RN	24VDC	N/A	2 -#16 600V RATED	THHN	N/A	PLC	PUMP #2 RVSS (START)	
I- RVSS 2-CT	0-10 VDC	N/A	1 PR #18 600V SHIELDED	INSTRUMENT CABLE	N/A	PLC	PUMP #2 RVSS (CURRENT)	
D-RVSS 2- CAT5	DATA	N/A	CAT 5 24AWG 600V NETWORK CABLE	SHIELDED DATA CABLE	N/A	PLC ETHERNET SWITCH	PUMP #2 RVSS	
-	-	-	-	-	-	-	-	
-	-	-	-	-	-	-	-	
C-RVSS 3-RN	24VDC	N/A	2 -#16 600V RATED	THHN	N/A	PLC	PUMP #3 RVSS (START)	
I- RVSS 3-CT	0-10 VDC	N/A	1 PR #18 600V SHIELDED	INSTRUMENT CABLE	N/A	PLC	PUMP #3 RVSS (CURRENT)	
D-RVSS 3- CAT5	DATA	N/A	CAT 5 24AWG 600V NETWORK CABLE	SHIELDED DATA CABLE	N/A	PLC ETHERNET SWITCH	PUMP #3 RVSS	
-	-	-	-	-	-	-	-	
-	-	-	-	-	-	-	-	

1 CONDUIT AND CABLE SCHEDULE - INSTRUMENTATION
SCALE: NONE

DEPT. OF UTILITIES
ST. TAMMANY PARISH GOVERNMENT
620 N. TYLER STREET
COVINGTON, LA 70433

No.	DESCRIPTION OF REVISION	DATE:

DESIGNED BY:	CS
DRAWN BY:	EM
CHECKED BY:	CS
SUBMITTED BY:	KYLE ASSOC.
PROJECT No.:	TU23000178
ISSUE DATE:	03/12/2024
APPROVED BY:	---
SHEET SIZE:	ANSI D
SCALE:	

STATE OF LOUISIANA
CHRISTIAN J. SCHOE
License No. 32403
PROFESSIONAL ENGINEER
IN
ELECTRICAL ENGINEERING
03/12/2024

WEST ST TAMMANY PARISH WWTP
INFLUENT PUMP STATION
COVINGTON, LOUISIANA
PROJECT No.: TU 23000178

CONDUIT AND CABLE SCHEDULE - INSTRUMENTATION

SHEET NO.
E-12

Xref ..\X-Ref's\ x-ref KA Border 22x34.dwg

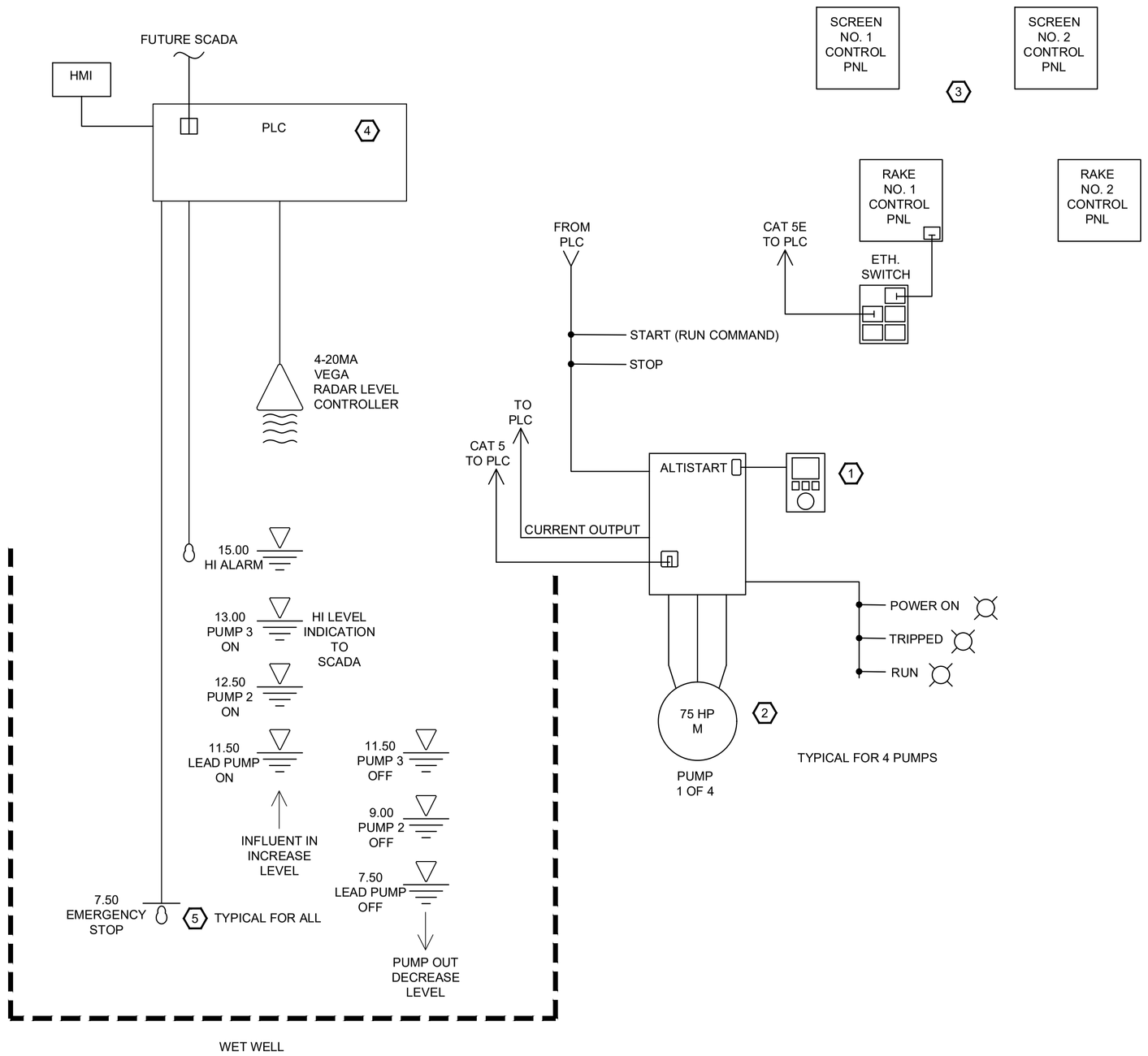

1 RVSS BLOCK DIAGRAM
SCALE: NONE

GENERAL NOTES:

A. ALL WORK SHALL BE DONE IN ACCORDANCE WITH THE VERSION OF THE NATIONAL ELECTRICAL CODE IN USE BY ST. TAMMANY PARISH.

B. ALL ELECTRICAL EQUIPMENT SHALL BE INSTALLED AT MINIMUM ELEVATION AS DETERMINED BY CIVIL DRAWINGS.

C. SEE DRAWING E-12 FOR CONDUIT AND CABLE SCHEDULE.

KEY NOTES:

1. THIS GRAPHIC DISPLAY TERMINAL IS USED TO CONTROL, ADJUST AND CONFIGURE THE RVSS AND DISPLAY THE CURRENT MOTOR VALUES.
2. ALL FOUR PUMP MOTORS SHALL BE SEQUENCED AND DUTY CYCLE BALANCED VIA THE PLC.
3. THE MECHANICAL BAR SCREEN AND RAKE CONVEYORS ARE STAND ALONE PACKAGED SYSTEMS. CONDUIT AND POWER LEADS TO BE PROVIDED AND INSTALLED PER THE VENDOR PACKAGED DRAWINGS.
4. PROVIDE AND INSTALL IN THE PROVIDED 36X60X12 CONTROL PANEL, AN ALLEN BRADY COMPACT LOGIX PLC OR EQUAL AND PROVIDE NECESSARY I/O FOR THE RVSS STARTERS. PROVIDE TWO 20A 120V AC CIRCUITS TO THE ENCLOSURE, ONE GENERAL PURPOSE AND ONE TO PROVIDE POWER TO A TERMINAL STRIP FOR A UPS POWER SUPPLY, 10 PORT NETWORK SWITCH, HMI, A 240 DC POWER SUPPLY AND SPARE POWER TERMINALS FOR ANY ADDITIONAL 120VAC REQUIREMENTS.
5. FLOAT SWITCHES SHALL BE MADISON M4548 / 9 SERIES OR EQUAL.

ST. TAMMANY PARISH GOVERNMENT

DEPT. OF UTILITIES
ST. TAMMANY PARISH GOVERNMENT
620 N. TYLER STREET
COVINGTON, LA 70433

No.	DESCRIPTION OF REVISION	DATE:

DESIGNED BY: CS
DRAWN BY: EM
CHECKED BY: CS
SUBMITTED BY: KYLE ASSOC.
PROJECT No.: TU23000178
ISSUE DATE: 03/12/2024
APPROVED BY: ---
SHEET SIZE: ANSI D
SCALE:

STATE OF LOUISIANA
CHRISTIAN J. SCHADE
License No. 32403
PROFESSIONAL ENGINEER
IN
ELECTRICAL ENGINEERING
03/12/2024

WEST ST TAMMANY PARISH WWTP
INFLUENT PUMP STATION
COVINGTON, LOUISIANA
PROJECT No.: TU 23000178

RVSS BLOCK DIAGRAM

SHEET NO.
E-13

GENERAL NOTES:

A. ALL WORK SHALL BE DONE IN ACCORDANCE WITH THE VERSION OF THE NATIONAL ELECTRICAL CODE IN USE BY ST. TAMMANY PARISH.

B. ALL ELECTRICAL EQUIPMENT SHALL BE INSTALLED AT MINIMUM ELEVATION AS DETERMINED BY CIVIL DRAWINGS.

C. MOTOR CONTROL CENTER SHALL BE FABRICATED BY AN OEM SUCH AS TESCO OR EQUAL. ENCLOSURES SHALL BE NEMA 3R, GALVANIZED PAINTED STEEL.

KEY NOTES:

1. INSTALL BURIED UTILITY TAPE TO READ "CAUTION CAUTION CAUTION ELECTRICAL LINE BURIED BELOW". UTILITY TAPE SHALL BE 12" ABOVE RACEWAY.
2. RED DYE CONCRETE ELECTRICAL DUCT BANK.
3. CONTRACTOR SHALL USE SPACERS AS REQUIRED TO SUPPORT CONDUITS DURING CONCRETE POUR.
4. BOND TO BUILDING/GENERATOR GROUNDING ELECTRODE AND TO EXISTING PANEL MDP GROUND.

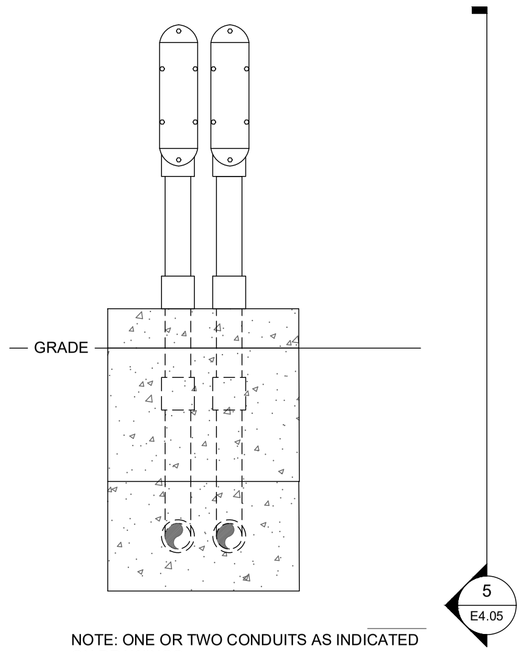

NOTE: ONE OR TWO CONDUITS AS INDICATED ON DRAWINGS

1 CONDUIT STUB UP DETAIL
SCALE: NONE

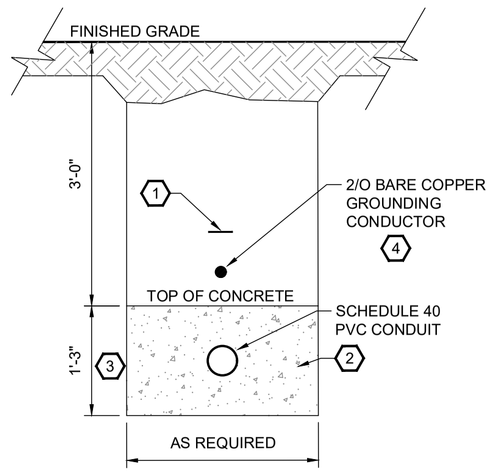

2 SINGLE CONDUIT DUCTBANK DETAIL
SCALE: NONE

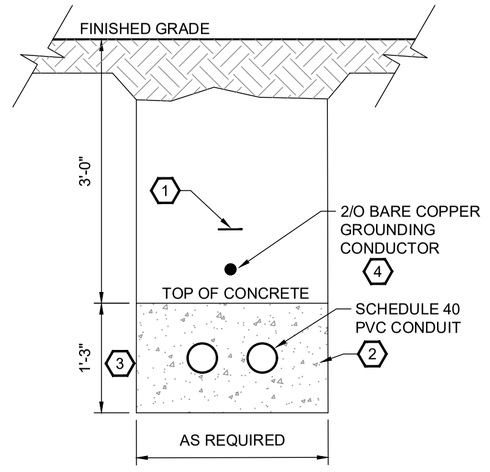

3 DOUBLE CONDUIT DUCTBANK DETAIL
SCALE: NONE

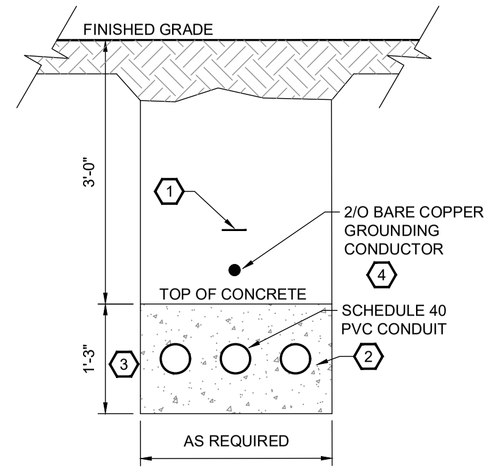

4 TRIPLE CONDUIT DUCTBANK DETAIL
SCALE: NONE

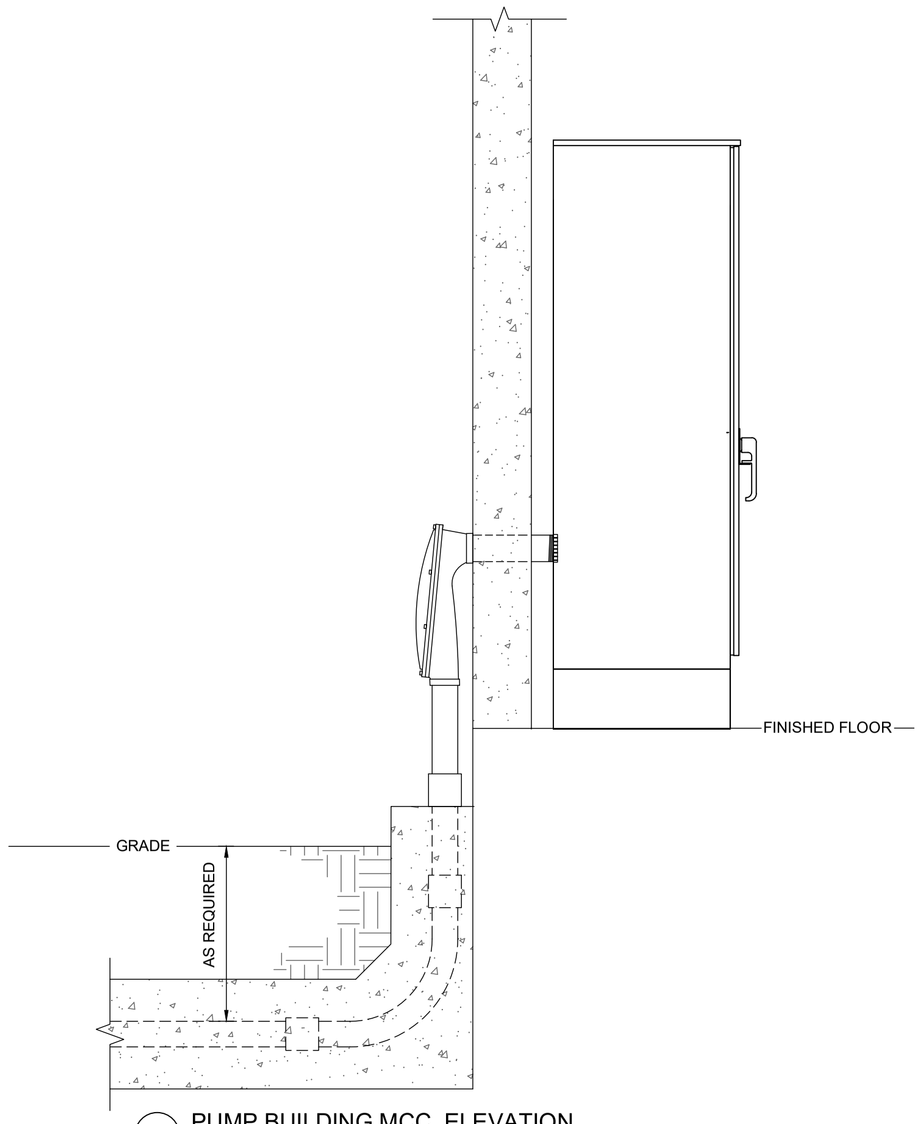

5 PUMP BUILDING MCC ELEVATION
SCALE: NONE

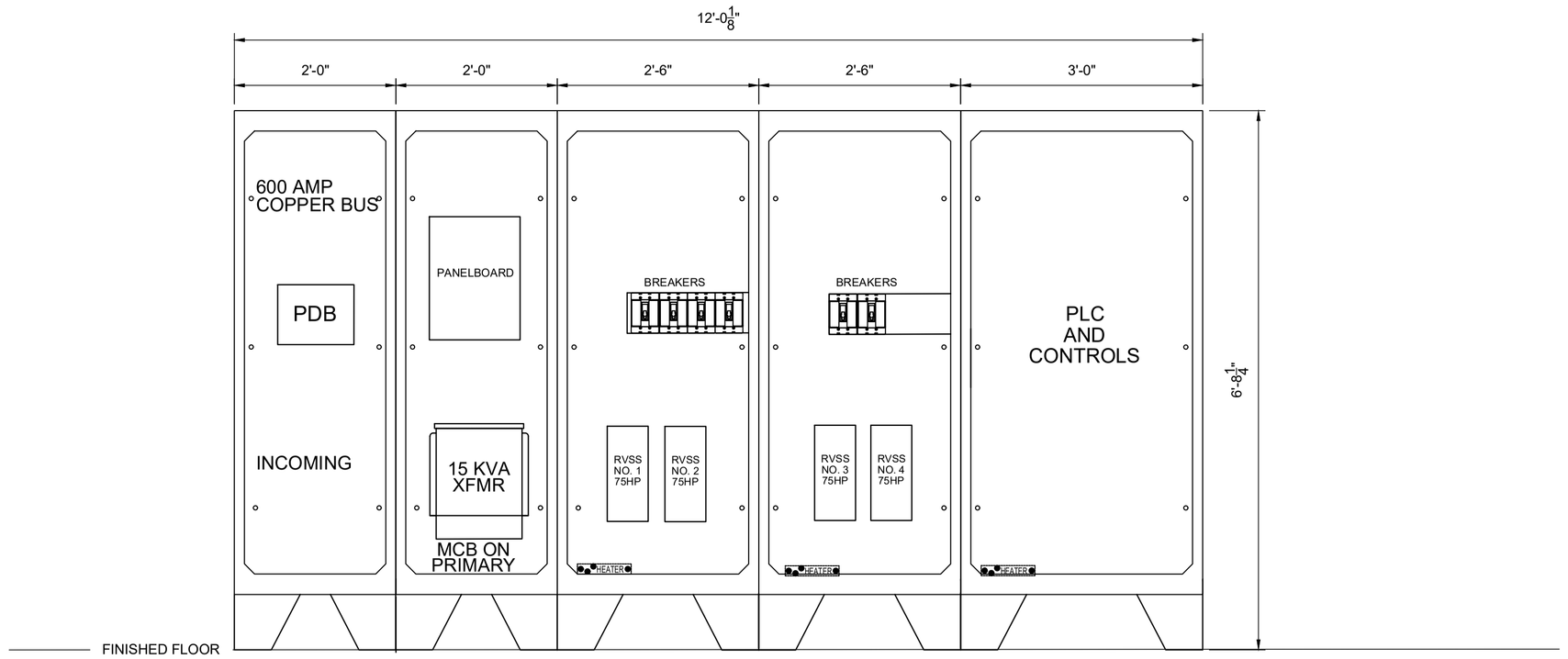

6 PUMP BUILDING SERVICE RACK ELEVATION - LOOKING NORTH
SCALE: 3/4" = 1'-0"

0' 3" 6" 9" 1' 2'

DEPT. OF UTILITIES
ST. TAMMANY PARISH GOVERNMENT
620 N. TYLER STREET
COVINGTON, LA 70433

No.	DESCRIPTION OF REVISION	DATE:

DESIGNED BY:	CS
DRAWN BY:	EM
CHECKED BY:	CS
SUBMITTED BY:	KYLE ASSOC.
PROJECT No.:	TU23000178
ISSUE DATE:	03/12/2024
APPROVED BY:	---
SHEET SIZE:	ANSI D
SCALE:	

STATE OF LOUISIANA
CHRISTIAN R. SCHADE
License No. 32483
PROFESSIONAL ENGINEER
IN
ELECTRICAL ENGINEERING
03/12/2024

WEST ST TAMMANY PARISH WWTP
INFLUENT PUMP STATION
COVINGTON, LOUISIANA
PROJECT No.: TU 23000178

ELECTRICAL DETAILS

SHEET NO.
E-14

GENERAL NOTES:

A. ALL WORK SHALL BE DONE IN ACCORDANCE WITH THE VERSION OF THE NATIONAL ELECTRICAL CODE IN USE BY ST. TAMMANY PARISH.

B. ALL ELECTRICAL EQUIPMENT SHALL BE INSTALLED AT MINIMUM ELEVATION AS DETERMINED BY CIVIL DRAWINGS.

KEY NOTES:

1. CONTRACTOR SHALL FABRICATE AND INSTALL ALUMINUM GUTTERS FOR CABLE ROUTING. DEPTH SHALL MATCH PANEL MDP. WIDTH SHALL BE 24". METAL GAUGE SHALL NOT BE LESS THAN 12.

2. CONTRACTOR SHALL WELD EXTENSIONS TO EXISTING METAL MOUNTING PLATES FOR GUTTER MOUNTING.

3. PROVIDE AND INSTALL CHASE NIPPLES BETWEEN GUTTER AND PANEL ENCLOSURE. INCLUDE RUBBER GASKETS TO MAKE WEATHERPROOF.

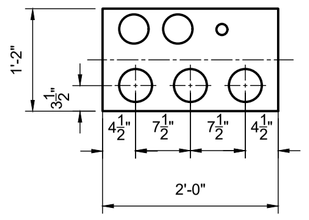

2 CONDUIT TO GUTTER LAYOUT
SCALE: NONE

EXISTING PANEL, LOOKING SOUTH

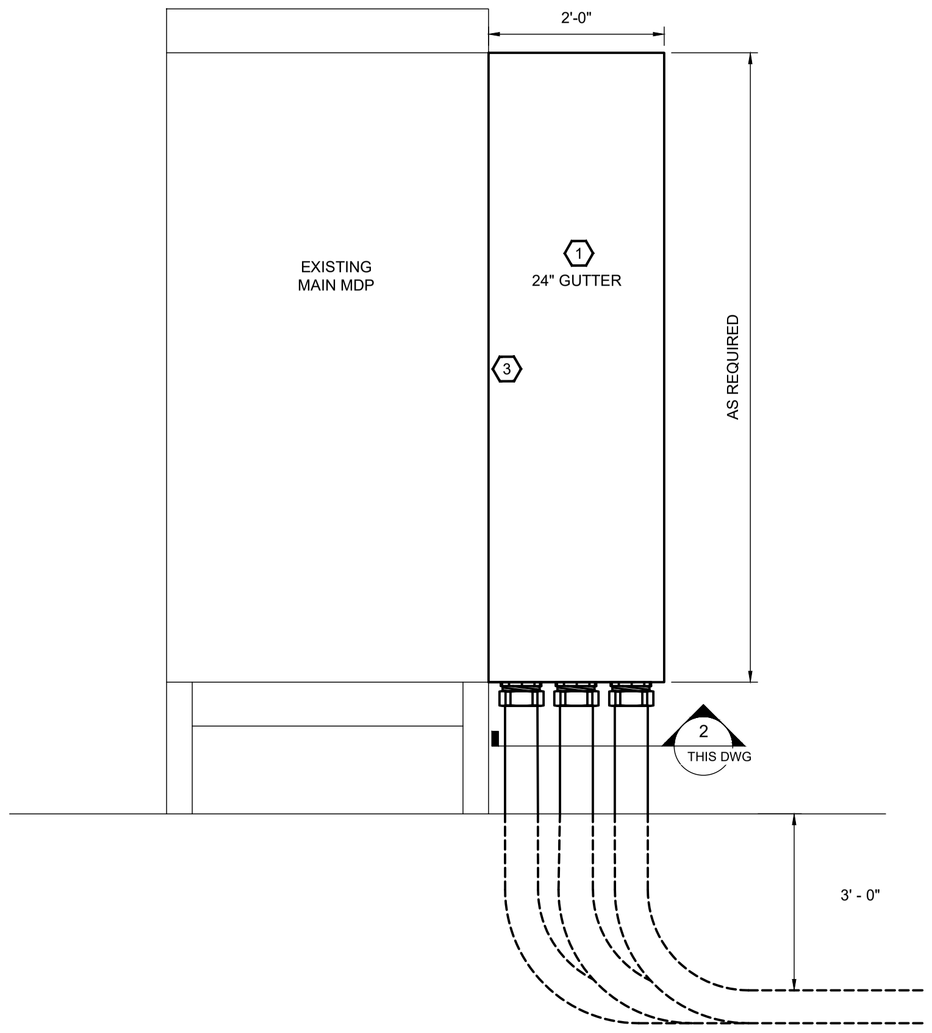

1 PANEL MDP ELEVATION
SCALE: NONE

EXISTING PANEL, LOOKING NORTH

ST. TAMMANY PARISH GOVERNMENT

DEPT. OF UTILITIES
ST. TAMMANY PARISH GOVERNMENT
620 N. TYLER STREET
COVINGTON, LA 70433

No.	DESCRIPTION OF REVISION	DATE:

DESIGNED BY:	CS
DRAWN BY:	EM
CHECKED BY:	CS
SUBMITTED BY:	KYLE ASSOC.
PROJECT No.:	TU23000178
ISSUE DATE:	03/12/2024
APPROVED BY:	— —
SHEET SIZE:	ANSI D
SCALE:	

STATE OF LOUISIANA
CHRISTIAN E. SCHOE
License No. 32483
PROFESSIONAL ENGINEER
IN
ELECTRICAL ENGINEERING
03/12/2024

WEST ST TAMMANY PARISH WWTP
INFLUENT PUMP STATION
COVINGTON, LOUISIANA
PROJECT No.: TU 23000178

ELECTRICAL DETAILS

SHEET NO.
E-15

Xref ..\X-Ref's\ x-ref KA Border 22x34.dwg

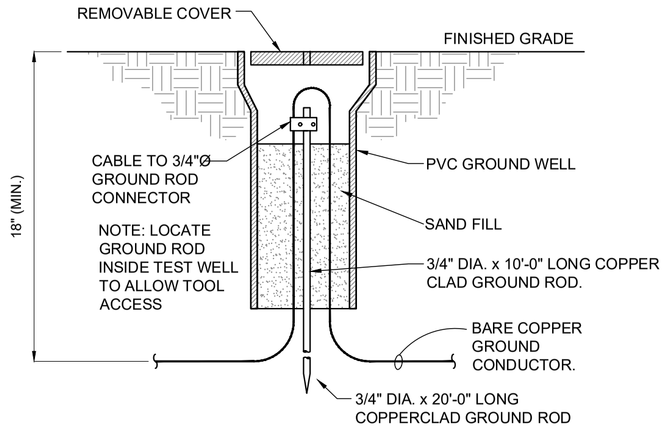

1 GROUNDING TEST WELL
SCALE: NONE

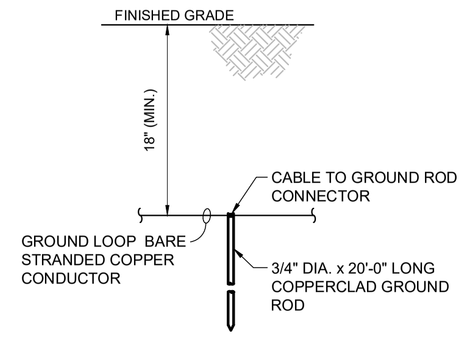

2 GROUND ROD
SCALE: NONE

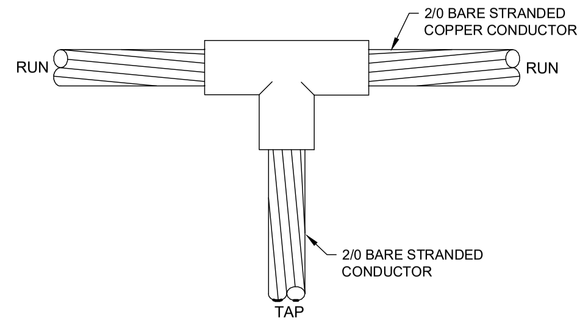

3 TYPICAL GROUNDING RING CONNECTION
SCALE: NONE

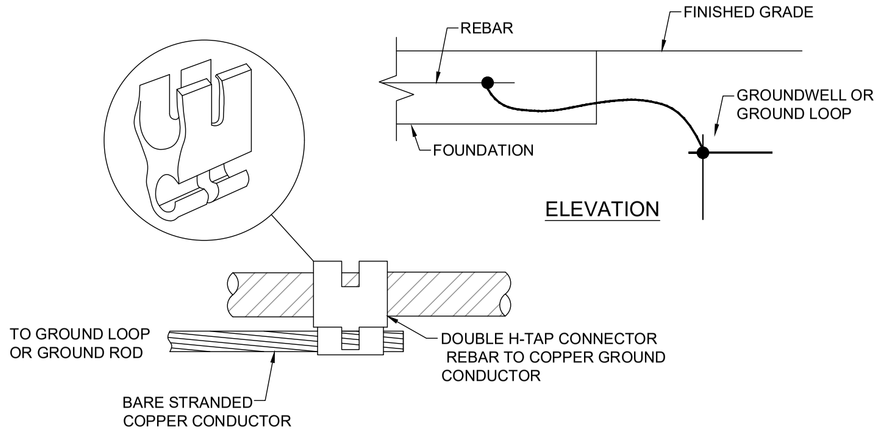

4 EMBEDDED REBAR GROUND CONNECTION INSTALLATION
SCALE: NONE

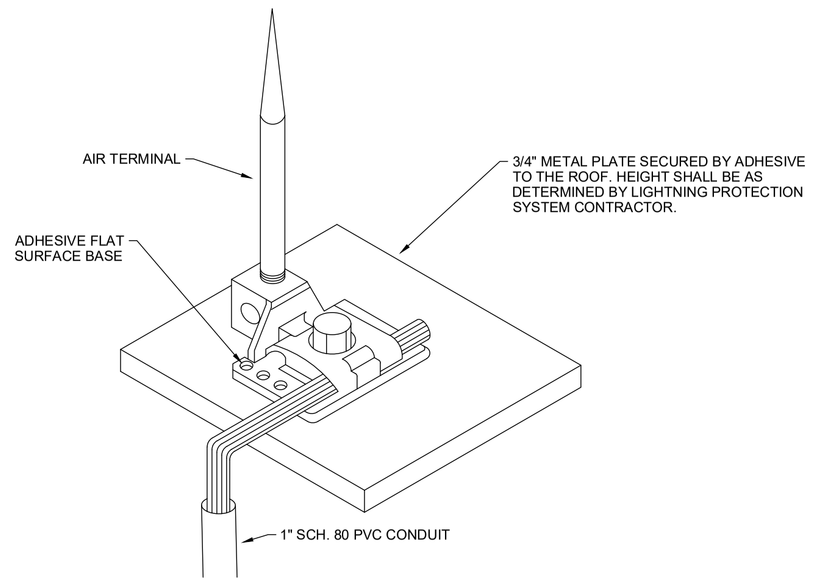

5 LIGHTNING PROTECTION AIR TERMINAL DETAIL
SCALE: NONE

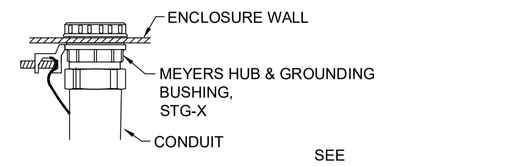

CONDUIT ENTRY ELEVATION

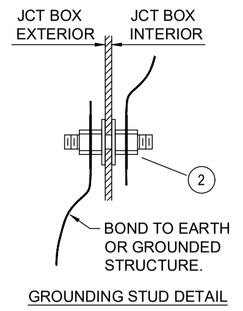

GROUNDING STUD DETAIL

CONTRACTOR TO USE STAINLESS STEEL HARDWARE

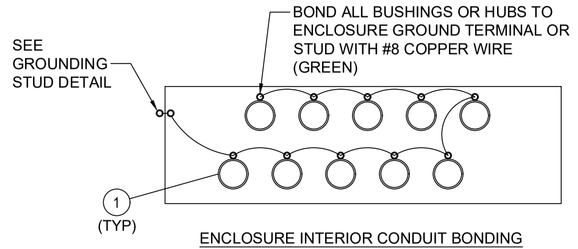

ENCLOSURE INTERIOR CONDUIT BONDING

BILL OF MATERIAL		
ITEM	QTY.	DESCRIPTION
1	AS REQ.	MYERS GROUND HUB
2	1 EA	BURNDY TYPE KCKF23

6 CONDUIT TO JCT. BOX GROUNDING DETAIL
SCALE: NONE

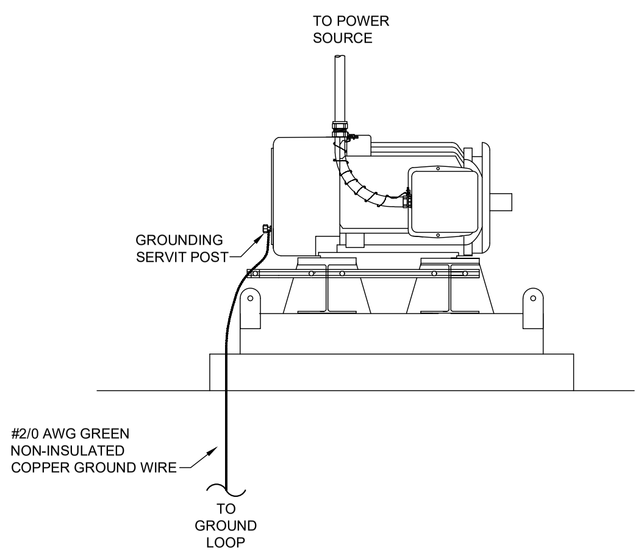

7 HORIZONTAL MOTOR GROUNDING
SCALE: NONE

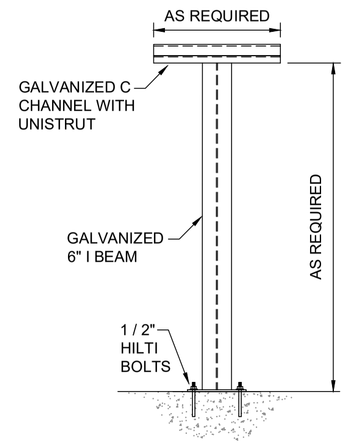

8 TEE SUPPORT
SCALE: NONE

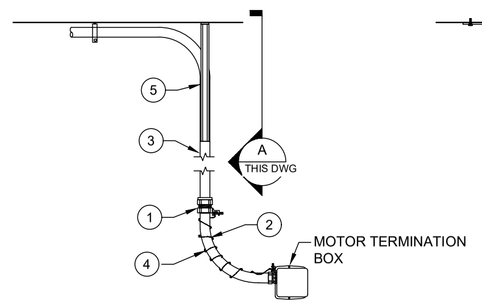

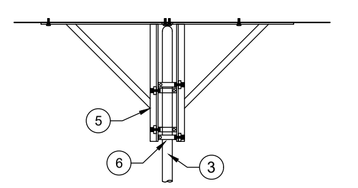

SPECIFIC NOTES, THIS DETAIL ONLY:

1. UTILIZE POLARIS IPL SERIES CABLE CONNECTORS FOR MOTOR TERMINATIONS.

BILL OF MATERIAL				
ITEM #	QTY.	DESCRIPTION	MFG.	PART NO.
1	4	LIQUID TIGHT METAL CONDUIT CONNECTOR w/ GROUND LUG	CROUSE HINDS	LTB-250
2	A/R	LIQUID TIGHT FLEXIBLE METAL CONDUIT		
3	A/R	RGS CONDUIT		
4	A/R	#4 AWG CU BONDING JUMPER		
5	4	SUPPORT BRACKET	BLINE	B3064-3
6	A/R	STANDOFF STRAPS		

9 MOTOR TERMINATION DETAIL
SCALE: NONE

DEPT. OF UTILITIES
ST. TAMMANY PARISH GOVERNMENT
620 N. TYLER STREET
COVINGTON, LA 70433

No.	DESCRIPTION OF REVISION	DATE:

DESIGNED BY: CS
DRAWN BY: EM
CHECKED BY: CS
SUBMITTED BY: KYLE ASSOC.
PROJECT No.: TU23000178
ISSUE DATE: 03/12/2024
APPROVED BY: ---
SHEET SIZE: ANSI D
SCALE:

STATE OF LOUISIANA
CHRISTIAN R SCHUDE
License No. 32483
PROFESSIONAL ENGINEER
IN
ELECTRICAL ENGINEERING
03/12/2024

WEST ST TAMMANY PARISH WWTP
INFLUENT PUMP STATION
COVINGTON, LOUISIANA
PROJECT No.: TU 23000178

ELECTRICAL DETAILS

SHEET NO.
E-16

Xref ..\X-Ref's\ x-ref KA Border 22x34.dwg