**Louisiana**

# Department of Transportation And Development

**Traffic Control Standard**

## Number 33

## Span Wire Sign Bracket

STATE OF LOUISIANA
LEI Q. WANG
License No. 33365
PROFESSIONAL ENGINEER

11/07/2012

Revised November 07, 2012

## 1.0 GENERAL

**Span Wire Sign Bracket Assembly (Stock No. 32-06-1360, SAP No. 12003)**

This specification sets forth the minimum requirements for a span wire sign bracket assembly to support a standard traffic control sign on a span wire cable in a range of 3/8" to 1/2".

All components and accessories shall be designed in order to insure reliability and minimum maintenance. Unless otherwise specified, all components and accessories shall conform to the specifications that follow.

## 2.0 MATERIAL and CONSTRUCTION

The bracket shall be designed for alignment of the sign to rotate around the horizontal axis. The design of the mounting bracket assembly shall be certified by the manufacturer to withstand 100 mph winds while holding the weight of the sign, up to a maximum of 20 pounds.

A span wire clamp shall be supplied with the hanger bracket assembly. The clamp shall be fastened tightly to the support span cable. A cable protector shall be provided if needed in the manufacturer's design to prevent the bracket assembly from rotating around the support span cable. The example cable clamp and its components are shown in the attached figures. The alignment mechanism shall be attached securely to the span wire clamp to prevent movement of the sign out of its intended alignment. All free swinging pivot points shall be hinged on a smooth suspension (hanger) pin that is held in place with a cotter pin or a cable saddle that works in conjunction with the pivot arm and acts as a bearing that free floats around the cable saddle a full 360 degrees.

A flat surface shall be provided on the sign bracket for attaching the sign. The surface shall be of a sufficient length, width and design to provide the attachment of a sign. In addition, four mounting holes shall be pre-drilled and located on the sign bracket.

Any required miscellaneous hardware such as screws, bolts, hex nuts, and "U" shaped bolts shall be electro-plated steel or stainless steel.

## 3.0 WARRANTY

All equipment shall be warranted for a minimum of one (1) year. All warranty periods shall begin at the date of acceptance by the Department.

## 4.0 PACKAGING

Each assembly shall be preassembled and packaged in separate boxes. Separate boxes may be combined in cases or pallets.

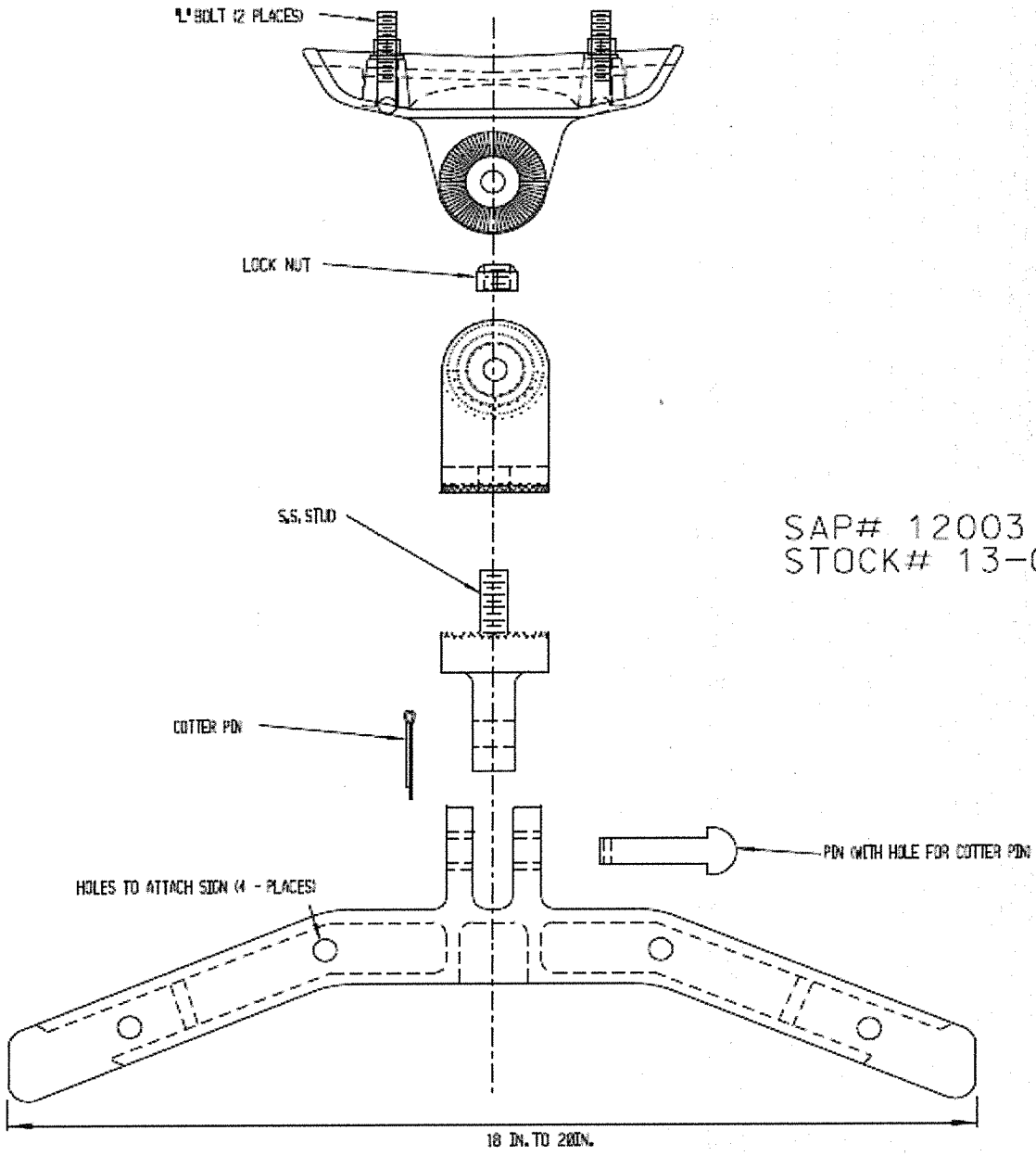


SAP# 12003
STOCK# 13-06-1360

NOTE:

1. Span wire saddle shall be designed to fit a cable range of 3/8" -1/2"
2. Material to be of Cast Aluminum construction
3. All hardware for device shall be Electro-Plated steel or stainless steel
4. Sign Mounting Bracket shall be pre-dirlled with holes to mount sign
5. Sign mounting bracket shall have free movement around axis of pin
6. See TCS 33 written specification for more information

FIGURE 1 SPAN WIRE SIGN BRACKET

LOUISIANA DEPARTMENT OF TRANSPORTATION AND DEVELOPMENT
TRAFFIC CONTROL STANDARD NO. 33
DRAWN BY: SDM DATE: 11/07/2012

**THIS DRAWING IS FOR ILLUSTRATIONPURPOSES ONLY**

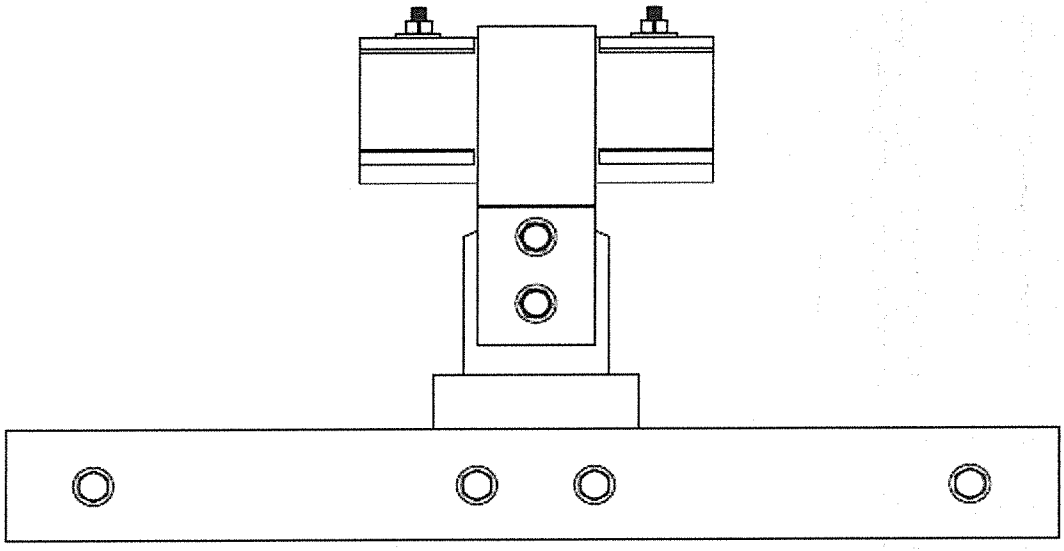

FRONT VIEW

SAP# 12003
STOCK# 13-06-1360

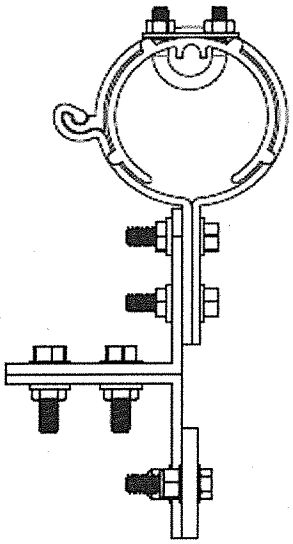

SIDE VIEW

NOTE:

1. Span wire saddle shall be designed to fit a cable range of 3/8" -1/2"
2. Material to be of Cast Aluminum construction
3. All hardware for device shall be Electro-Plated steel or stainless steel
4. Sign Mounting Bracket shall be pre-dirlled with holes to mount sign
5. Sign mounting bracket shall have free movement around axis
6. See TCS 33 written specification for more information

FIGURE 2 SPAN WIRE SIGN BRACKET

LOUISIANA DEPARTMENT OF TRANSPORTATION AND DEVELOPMENT
TRAFFIC CONTROL STANDARD NO. 33
DRAWN BY: SDM DATE: 11/07/2012

**THIS DRAWING IS FOR ILLUSTRATIONPURPOSES ONLY**