Louisiana

Department of Transportation And Development

Traffic Control Standard

Number 1B

Mast Arm Traffic Sign Mounting Bracket

STATE OF LOUISIANA
LEI Q. WANG
License No. 33365
PROFESSIONAL ENGINEER

1/10/2017

January 10, 2017

TCS 1B
MAST ARM TRAFFIC SIGN MOUNTING BRACKET
(SAP #10955, Stock #14-04-6204)

The device described herein is for mounting vehicle traffic signs to rigid cylindrical structures. Design of the device shall conform to the latest AASHTO standards for wind loading and ITE standards for attaching to the sign. The AASHTO and ITE standards will be followed except where exceptions are taken within this standard.

GENERAL DESIGN

This mounting device shall be a multi-piece assembly providing adjustable components for installing signs in a horizontal or vertical position relative to the roadway surface. The device shall mount to any type of structure and provide complete adjustment of the mounting hardware as shown in the drawings to align the sign toward the driver. Adjustment and installation shall be made using simple hand tools. Modifying, milling, drilling, or threading of the supporting structure shall not be required. The device shall include the sign attachment brackets, support tube, swivel plate, cable stays, and main mount. All casted parts shall be from aluminum or brass and fasteners shall be of stainless steel.

MAIN MOUNT

The device shall have a uniformly curved or v-shaped cast main mounting surface. The width of the mount shall be approximately 9-1/2" long and 4-1/2" wide. The mounting surface shall rest against the mast arm and held in place by a cable(s) attached to the mount and wrapped around the structure. The intent of this design is to provide stable positioning of the mount against various shaped structures (such as multi sided and round). Any mount that does not provide stable positioning on any structure will be unacceptable.

Any design that allows the nuts on the cable to bind will be unacceptable.

The back of the main mount, shall be designed for attaching a swiveling plate. The swiveling plate shall be secured to the mount using bolt(s) and washer(s) through slotted holes in the plate and into threaded bosses in the mount. Two sets of bosses shall be provided in the mount located ninety degrees (90°) apart. The swivel plate and main mount shall be designed to provide an alignment mechanism positioning the plate correctly on the mount, an axis for rotating the plate on the mount and align the slotted holes with the threaded bosses.

A cable locking plate(s) shall be provided on the mount that will secure the cable to the mount. Nuts and washers installed on the cable stud shall provide a means to tighten the cable around the structure. During installation of the mount the locking plate shall allow the cable to be hand tightened against the structure by permitting the free end to be pulled through the plate. Once the locking plate is tightened against the cable, the cable is then tightened against the structure using nuts and washers. The design of the locking plate

shall use bolt(s), attaching the locking plate to the mount. The nuts and washers on the threaded end of the cable assembly shall be used to tighten the clamp assembly to the arm.

SWIVEL PLATE

The swivel plate shall be cast in one piece providing a matched surface to the main mount, slotted holes for adjustment and attachment, and two tube clamps. The diameter of the plate shall be approximately 5".

An alignment boss shall be provided on the plate that will fit into an alignment hole, approximately 2" diameter, in the main mount. Rotation of the swivel plate shall be unrestricted for three hundred and sixty degrees (360°) without the bolts attaching the plate to the main mount installed.

The slots shall allow the swivel plate to rotate a minimum of fifty-four degrees (54°) with the bolts installed through the slots in the threaded bosses on the main mount.

The clamp(s) shall be designed to compress around an aluminum tube described below. The clamp shall have boss(es) and bolts securing the removable part of the clamp to the swivel plate. The compression onto the tube shall secure the tube preventing it from movement in any direction with the manufacturer specified torque on the bolts.

ALUMINUM TUBE

The aluminum tube shall be manufactured from aluminum alloy 6061-T6 material and be a minimum of schedule 40 thickness. The length for sign mounting shall be 54" – 60" unless stated on the plans or order to be longer. The outside of the tube shall be smooth for positioning within the clamps on the swivel plate throughout the length of the tube.

CABLE ASSEMBLIES

One or two cables will be allowed to attach main mount to the structure.

The cable(s) shall be used to secure the main mount to the supporting structure. Standard cable lengths are shown on the drawing shall be provided. Special cable length identified on the plans or orders shall be provided in place of the standard lengths.

If using one cable: The cables shall be 3/16" min. diameter stainless steel aircraft cable with a securely attached threaded stud on both ends with two hex., locking nut, flat washer, provided.

If using two cables: The cables shall be 3/16" min. diameter stainless steel aircraft cable with a securely attached threaded stud on one ends with two hex., locking nut, flat washer, provided. The other end must be fused to prevent fraying.

ALTERNATE MOUNTING METHOD

When specified in the plans or on the order the material shall be provided as described for an alternate mounting method. The main mount shall be designed to accept stainless steel straps to secure the mount to the supporting structure in place of the cable and cable locking plates. Stainless steel straps shall be installed with a single or double wrap around the structure and secured using buckles. Both strap and buckle shall be from the same manufacturer. The main mount shall not have any edges that will damage the strap during and after installation.

SIGN MOUNTING BRACKET

When specified on the plans or order for a mast arm sign mounting bracket shall require the following part to be include with the bracket: Main Mount, Cables, 1 ½" by 24" tube, and two (2) each sign attachment brackets. The bracket shall be cast aluminum, designed for one side to fit flush against the back of the sign and attached with two bolts, nuts, and washers spaced 6" apart. The clamp must securely fit around a 1 ½" tube and is tightened with threaded fasteners.

CASTED MATERIAL

Aluminum shall be used for all casted parts. The material shall be a 713 alloy or approved equal meeting ASTM B179 standards. When specified on order or in plans the casted parts shall be copper alloy no. C83600, (formerly know as leaded red brass, composition bronze, 85-5-5-5).

PACKAGING

All parts, components and hardware for each assembly other than the tube shall be packaged in one box. Under no circumstances shall the vendor mix parts from multiple complete assemblies together.

TRAFFIC SIGN MOUNTING BRACKET

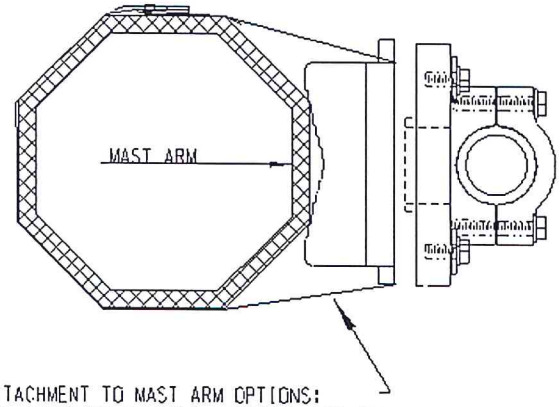

ATTACHMENT TO MAST ARM OPTIONS:
USE STANDARD BANDING MATERIAL (AS SHOWN)
OR STAINLESS STEEL CABLES WITH HARDWARE (ITEM 1).

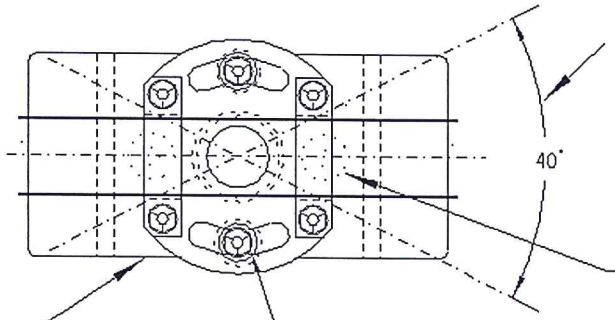

APPROXIMATELY 40 DEGREES ADJUSTMENT.

THREADED BOSES PROVIDED FOR ROTATING SWIVEL PLATE 90 DEGREES FROM POSITION SHOWN.

ITEM 2

SCREW(S) FOR VERTICAL ADJUSTMENT

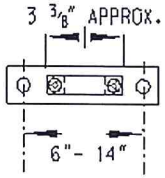

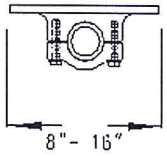

ITEM 4

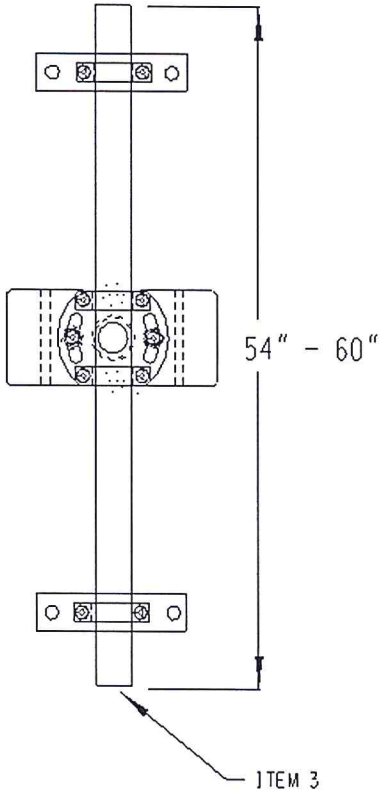

ITEM 3

STANDARD PARTS LIST

ITEM	PART DISCRIPTION
1	CABLE ASSEMBLY
2	MAIN CABLE MOUNT ASSEMBLY LESS CABLE AND TUBE
3	ALUMINUYM TUBE SCH 40 - 54" TO 60" LONG OR SPECIFIED LENGTH
4	SIGN MOUNT 8" - 16" LONG. TWO 7/16" HOLES DRILLED. CLAMP ATTACHES TO 1-1/2" TUBE.

CABLE FOR CLAMP ASSEMBLY ONE (1) REQUIRED

LENGTH 96" INCLUDING THREADED CONNECTORS S.S. PERMENATELY ATTACHED. A STAINLESS STEEL WASHER SHALL ALSO BE PROVIDED FOR EACH CABLE.

CABLE FOR CLAMP ASSEMBLY TWO (2) REQUIRED

LENGTH 50" INCLUDING THREADED CONNECTOR S.S. PERMENATELY ATTACHED. THE FREE END OF THE CABLE SHALL BE CRIMPED OR WELDED TO PREVENT FRAYING. A STAINLESS STEEL WASHER SHALL ALSO BE PROVIDED FOR EACH CABLE.

LOUISIANA DEPARTMENT OF TRANSPORTATION AND DEVELOPMENT

TRAFFIC CONTROL STANDARD NO.130

DRAW BY: SDM DATE 05/22/2015

THIS DRAWING IS FOR ILLUSTRATIONPURPOSES ONLY