Purchasing Office
P.O. Box 40197 • Lafayette, LA 70504-0197
Office: (337) 482-5396
Fax: (337) 482-5059

20222 SOLICITATION TABLE OF CONTENTS

CROSSWALK CONSTRUCTION – HEBRARD BLVD

Page No.

1. BIDDER CERTIFICATION INFORMATION 1
2. SCOPE OF WORK 2
3. COMPLIANCE TO SCHEDULE/LIQUIDATED DAMAGES 2
4. BID SECURITY REQUIREMENTS 2
5. LOUISIANA CONTRACTORS LICENSE REQUIREMENTS 2
6. BOYCOTT PROHIBITION CLAUSE 2
7. BUSINESS HOURS 3
8. SITE VISIT CONTACT INFORMATION 3
9. PRE-BID MEETING INFORMATION 3
10. ELECTRONIC BID SUBMISSION GUIDELINES 4
11. VENDOR CHECKLIST 6
12. DETAILED SPECIFICATIONS 6
13. ALTERNATE(S) 6
14. INSTRUCTIONS TO BIDDERS (Articles 1-9) 7
15. SUPPLEMENTARY CONDITIONS (Articles 1-5, 7-15) 15
16. INSURANCE REQUIREMENTS 37
17. GENERAL REQUIREMENTS 41
18. LOUISIANA UNIFORM PUBLIC WORK BID FORM 44
19. ATTESTATIONS AFFIDAVIT FORM 45
20. NON-COLLUSION AFFIDAVIT FORM 47
21. ENGINEERING SPECIFICATIONS/PLANS 48

UNIVERSITY OF LOUISIANA AT LAFAYETTE

Lafayette, Louisiana

SOLICITATION FILE NO. 20222

TITLE: CROSSWALK CONSTRUCTION – HEBRARD BLVD
BID SCHEDULE

Pre-bid meeting: Wednesday, May 27, 2020 10:00AM
DUE DATE: Tuesday, June 16, 2020 2:00PM
BID OPENING: Wednesday, June 17, 2020 9:00AM

PROPOSAL FOR FURNISHING ALL LABOR, MATERIALS, EQUIPMENT, TRANSPORTATION, SUPERVISION, PERMITS, ETC. NECESSARY FOR CONSTRUCTION OF THE HEBRARD CROSSWALK, LOCATED ON THE UL LAFAYETTE CAMPUS, LAFAYETTE, LOUISIANA.

BID DEADLINE

The Purchasing Office Bids at the University of Louisiana at Lafayette will receive proposals for this solicitation up to the above-mentioned date and time. Proposals will not be received after this specified hour and date. Bids will be publicly opened and read by a designated employee of the Purchasing Department.

This is a *Competitive Sealed Bid. See Guidelines for Electronic Submission of Bids and Virtual Bid Openings on page 4 of this solicitation, which contains complete details for submitting bids. Further information can be found in the attached* INSTRUCTIONS TO BIDDERS.

Bidders submitting bids in the amount of $50,000.00 or more SHALL show their license number on the front of the sealed envelope in which their bid is enclosed; bids not submitted in accordance with this requirement, SHALL be rejected and shall not be read.

Bid must be received by the due date and time in the Purchasing Office as per the instructions outlined in this solicitation. Bid is to be submitted with the BID NUMBER and DUE DATE ON THE OUTSIDE OF THE ENVELOPE or IN THE SUBJECT LINE of the electronic submission. The public bid opening will take place on Wednesday, June 17, 2020 at 9:00AM on Zoom, which is available for viewing by registering at https://zoom.us/meeting/register/tJIrde6rqTotH9SDnvQtyl-Y74Ymu6p-dv67.

All inquiries regarding this request shall be directed to the Director of Purchasing at (337) 482-5396 or purchasing@louisiana.edu.

Attached is the completed proposal of the firm listed below. The undersigned certifies that he/she (or they) has/have carefully examined *the Instructions to Bidders, the General Conditions, and the Specifications* hereto attached and made part herein, and agrees to comply with the instructions, conditions, and specifications, as covered by the attached papers. On the basis of the specifications, the undersigned proposes to furnish any or all items listed in the schedule of items hereto attached, upon which prices are requested, and at the price stated for each item.

Firm Name	Signature [By signing this bid, bidder certifies compliance with La. R.S. 38:2212(A)(1)(c) or RS 38:2212(0)]
Address	Name (Printed)
City, State, Zip Code	Title
Telephone No. including area code	Date
Fax No. including area code	E-Mail

FURNISH ALL LABOR, MATERIALS, EQUIPMENT, TRANSPORTATION, SUPERVISION, PERMITS, ETC. NECESSARY FOR CONSTRUCTION OF THE HEBRARD CROSSWALK, LOCATED ON THE UL LAFAYETTE CAMPUS, LAFAYETTE, LOUISIANA, AS SHOWN ON THESE SPECIFICATIONS…

SCOPE OF WORK

1. Breakout and removal of existing concrete, walks, drives/road, concrete and road sub-base, sub surface drainage, existing catch basin modifications, excavation at drives and new walks, trees, grass, etc.
2. Installation of new subsurface drainage systems to be tied into existing storm drain catch basins.
3. Installation of new concrete slabs, sidewalks, pavers, etc.
4. All work indicated in the plans and specifications by ACSW Architects, dated April 01, 2020.

COMPLIANCE TO SCHEDULE/LIQUIDATED DAMAGES

DUE TO THE IMPORTANCE OF THE SCHEDULE, LIQUIDATED DAMAGES IN THE AMOUNT OF ONE HUNDRED DOLLARS ($100.00) PER DAY WILL BE ASSESSED FOR EVERY CALENDAR DAY THAT THIS PROJECT IS NOT COMPLETE BEYOND ONE HUNDRED TWENTY (120) DAYS OF THE NOTICE TO PROCEED.

BID SECURITY REQUIREMENTS

Each bidder MUST accompany his/her proposal with a bid security for five percent (5%) of the total maximum amount of his/her bid. The bid security shall be drawn in favor of the University of Louisiana at Lafayette and SHALL be in the form of a Bid Bond (Insurance Company), Bank Money Order, Certified Check or Cashier's Check. It shall become the property of the Owner in the event the contract and any performance bond are not executed within the time set forth. Bid bond shall be written by a surety or insurance company currently on the US Department of the Treasury Financial Management Service List of Approved Bonding Companies which is published annually in the Federal Register, or by a Louisiana domiciled insurance company with at least an "A-" Rating in the latest printing of the AM Best's Key Rating Guide to write individual bonds up to ten percent (10%) of policyholders' surplus as shown in the AM Best's Key Rating Guide.

Successful bidder WILL BE required to execute and deliver within ten (10) days of notification, a satisfactory performance bond and payment bond in the amount of one hundred percent (100%) of the contract price. Performance Bond, with Power of Attorney, shall be secured by a surety or insurance company currently on the US Department of the Treasury Financial Management Service List of Approved Bonding Companies, and in accordance with restrictions set by them or by an insurance company that is either domiciled in Louisiana or owned by Louisiana residents and is licensed to write surety bonds. In addition, any surety bond written for a public works Project shall be written by a surety or insurance company that is currently licensed to do business in the State of Louisiana. Also, to be provided at the same time is a Labor and Materials payment Bond in an amount equal to one hundred percent (100%) of the contract amount.

LOUISIANA CONTRACTORS LICENSE REQUIREMENTS

Contractors or contracting firms submitting bids in the amount of $50,000.00 or more shall certify that they are licensed contractors under Chapter 24 of Title 37 of the Louisiana Revised Statutes 1950 and show their license number on the front of the sealed envelope in which their bid is enclosed. Bids shall be accepted from Contractors who are licensed under L.A. R.S. 37:2150-2163 in the following classification: BUILDING CONSTRUCTION and/or HIGHWAY STREETS AND BRIDGES. Bids in the amount of $50,000.00 or more, not submitted in accordance with this requirement, shall be rejected and shall not be read. Additional information relative to licensing may be obtained from the Louisiana State Licensing Board for Contractors, Baton Rouge, Louisiana.

In accordance with La. R.S. 38:2227, LA. R.S. 38:2212.10 and LA. R.S. 23:1726(B) each bidder on this Project must submit a completed Attestations Affidavit (Past Criminal Convictions of Bidders, Verification of Employees and Certification Regarding Unpaid Workers Compensation Insurance) form found within this bid package. The Attestations Affidavit form shall be submitted to the Purchasing Department within 10 days after the opening of bids. **Affidavits submitted with the Bid Documents, prior to the opening of bids, will not be accepted in accordance with stated Revised Statute.**

PROHIBITION OF DISCRIMINATORY BOYCOTTS OF ISRAEL

In accordance with LA R.S. 39:1602:1, for any contract for $100,000 or more and for any contractor with five or more

employees, Contractor, or any Subcontractor, shall certify it is not engaging in a boycott of Israel, and shall, for the duration of this contract, refrain from a boycott of Israel.

The State reserves the right to terminate this contract if the Contractor, or any Subcontractor, engages in a boycott of Israel during the term of the contract.

BUSINESS HOURS

Delivery of any document(s) will NOT be accepted during non-business hours. Business hours are Monday through Thursday, 7:30 am to 11:45 am, 12:30 pm to 5:00 pm, and Friday, 7:30 am to 12:30 pm. The Purchasing Office will be closed during Federal, State and University holidays. It is the responsibility of the prospective bidder to be aware of such closures.

Please note that courier services such as UPS, FedEx, and DHL will be UNABLE to deliver to our physical location, as the building may be locked and unstaffed. *See Guidelines for Electronic Submission of Bids and Virtual Bid Openings on page 4 of this solicitation for more detailed information.*

In providing this bid, each bidder represents that: They have read and understand the bid documents and the bid is made in accordance herewith, and the bid is based upon the specifications described in the bid documents without exception.

SITE VISIT/CONTACT INFORMATION

It is the responsibility of the prospective bidder to visit and examine jobsite, take measurements to his/her own satisfaction and determine conditions under which work is to be done. Owner will not accept responsibility for conditions which careful examination of premises would have shown existed.

To visit jobsite and for further information, prospective bidder is to contact Scott Hebert, 337-482-2001.

PRE-BID MEETING INFORMATION

A pre-bid meeting will be held at **10:00AM, Wednesday, May 27, 2020** at Facility Management Department, Parker Hall, 310 E. Lewis Street, Lafayette, Louisiana, at which time details of plans and specifications will be discussed.

TAX RELATED INFORMATION

It is the responsibility of the prospective bidder to pay taxes on materials purchased for this project. The University of Louisiana at Lafayette is a tax exempt State Agency. However, that tax exempt status does not transfer to its contractors, subcontractors, suppliers, or vendors for their use.

For further information, prospective bidder is to contact the Purchasing Department at purchasing@lousiana.edu, or call Roxanne Formeller at 337-482-2955.

Guidelines for Electronic Submission of Bids and Virtual Bid Openings

In keeping with the physical distancing guidelines associated with COVID-19 Public Health Emergency declared by Governor John Bel Edwards in Proclamation Numbers 41, 33, 32, 30, 27, and 25 JBE 2020, the Purchasing Department at the University of Louisiana at Lafayette is suspending in-person attendance at public bid openings. All tasks associated with sealed bids and corresponding bid openings will be completed electronically to the greatest extent possible.

BID SUBMISSIONS

This information applies to competitive sealed bids. Bidders shall submit proposals by employing one of the following methods:

A. ***Electronic submittal:*** Bidders selecting the electronic submittal method must submit an electronic bid containing the mandatory information detailed in the bid specifications. The bid must be received at ULLafayetteBids@louisiana.edu on or before the date and time specified. Bidders e-mailing their bids should allow sufficient time to ensure receipt of their proposal by the time specified. The timestamp recorded in the email acknowledgement shall be the official time of submission.

The electronic submittal must contain the Subject Line:
File No. _____ Bid Submission – [Bidder/Company Name/LA Contractor's License No.]

If the file size of the email submission exceeds server requirements, the email submission may be broken into smaller emails with "Part 1 of ___" included at the end of each original Subject Line (e.g. File No. _____ Bid Submission – [Bidder/Company Name/LA Contractor's License No.] – Part 1 of 3).

The University assumes no responsibility for assuring accurate/complete e-mail transmission and receipt. The responsibility solely lies with each bidder to ensure their submission is received at the specified email address prior to the deadline. Proposals received after the deadline, corrupted files, and incomplete submissions (e.g. Part 1 and Part 2 of 3 are received, but Part 3 is not) will not be considered.

Bids advertised on LAPAC will show a solicitation file number formatted like 50011-ULLAF#####. It is only necessary to include the last five (5) digits of that number in the Subject Line.

Bids shall be submitted in searchable .pdf format.

Faxed submittals shall not be accepted.

Bid Submissions for Public Works
In addition to the above, the following applies to Title 38 Public Works electronic bid submittals.

The bidder must sign electronically or submit a scanned signature on the Louisiana Uniform Public Works Bid Form.

As stated on the Louisiana Uniform Public Works Bid Form, a corporate resolution or written evidence of the authority of the person signing the bid for the public work as prescribed by LA R.S. 38:2212(B)(5) shall be enclosed.

Bid submittal shall include security equal to 5% of bid. Cashier's checks shall not be accepted as bid security when submitting bids electronically.

Louisiana Contractor's License Number shall be in the subject line of the bid for ALL bids greater than or equal to $50,000.00.

Bids for Electrical/Mechanical Work greater than or equal to $10.000.00 shall disclose the Louisiana Contractor's License Number in the Subject Line.

Asbestos Abatement bids exceeding $1.00 shall disclose the Louisiana Contractor's License Number in the Subject Line.

B. ***USPS Mail submittal:*** This information applies to competitive sealed bids. The responsibility lies solely with the Bidder to allow enough mail time to ensure their bid is received at the address specified by the deadline. Mail to:

University of Louisiana at Lafayette
Purchasing Office
PO Box 40197
Lafayette, LA 70504-0197

Bidders may elect to submit bids by USPS mail if, among other reasons, providing samples or if using cashier's checks as bid security.

During the COVID-19 Emergency period and for the foreseeable future, the University's Post Office is open with limited hours, Tuesdays and Thursdays 7:30AM to 2:00PM.

Please note that courier services such as UPS, FedEx, and DHL will be UNABLE to deliver to our physical location, as the building may be locked and unstaffed.

The deadline for receipt of bids shall be listed in each Invitation to Bid (ITB), and mail is collected from the UL Lafayette Post Office mailbox at that time.

The bid shall be submitted in a sealed envelope/package **with the Solicitation File No. on the outside of the SEALED envelope/package**. To ensure the integrity of the bid process, when submitting a bid by mail, do not use the envelope provided by the USPS as your sealed envelope. Instead, place your own properly labeled sealed envelope inside the envelope used for mailing the sealed bid.

Bids advertised on the LAPAC website will show a solicitation file number formatted like 50011-ULLAF#####. It is only necessary to include the last five (5) digits of that number on the outside of the envelope.

Bid Submissions for Public Works
In addition to the above, the following applies to mail-in Title 38 Public Works bid submissions.

The bid submission must include an original signature on the Louisiana Uniform Public Works Bid Form.
As stated on the Louisiana Uniform Public Works Bid Form a corporate resolution or written evidence of the authority of the person signing the bid for the public work as prescribed by LA R.S. 38:2212(B)(5) shall be enclosed.

Bid shall include security equal to 5% of bid.

Louisiana Contractor's License Number shall be on the outside of the sealed envelope of the bid for ALL bids greater than or equal to $50,000.00.

Electrical/Mechanical Work greater than or equal to $10.000.00 shall disclose the Louisiana Contractor's License Number on the outside of the envelope.

Asbestos Abatement bids greater than $1.00 shall disclose the Louisiana Contractor's License Number on the outside of the envelope.

BID OPENING

Bid openings will continue to be open to the public, conducted virtually using Zoom. To ensure an accurate list of attendees, parties interested in viewing the opening must register for the meeting.

The link to register for each bid opening shall be provided with the Invitation to Bid.

The link will be live at that time and will provide live audio and video access to the bid opening.

The Bid Opening Zoom meeting shall begin at the top of the hour listed in the specifications as the Bid Opening time. The actual opening of bids shall begin at ten (10) past the hour to allow all attendees to log in and sign in properly. The public bid opening for this solicitation will take place on Wednesday, June 17, 2020 at 9:00AM on Zoom, which is available for viewing by registering at https://zoom.us/meeting/register/tJIrde6rqTotH9SDnvQtyl-Y74Ymu6p-dv67.

Requests for bid tabulations and solicitation inquiries should be directed to purchasing@louisiana.edu as listed in the solicitation/ITB.

VENDOR CHECK LIST

REQUIRED FORMS/ITEMS UPON BID SUBMISSION
_____ Louisiana Uniform Public Works Bid Form
_____ Bid Security Equal to 5% of Bid
_____ Louisiana Contractor's License Number (If Applicable) on Envelope Exterior or in Subject Line of email

REQUIRED FORMS AFTER BID OPENING/UPON BID AWARD
_____ Attestation Affidavit (ALL BIDDERS, WITHIN 10 DAYS OF BID OPENING)
_____ Non-Collusion Affidavit (LOW BIDDER, WITHIN 10 DAYS OF REQUEST)
_____ Disclosure of Ownership Affidavit (LOW BIDDER, WITHIN 10 DAYS OF REQUEST)
_____ Performance and Payment Bond (LOW BIDDER, WITHIN 10 DAYS OF REQUEST)
_____ Certificate of Insurance (*Insurance requirements revised February 2019*)
_____ Certificate of Recordation of Contract and Bonds
_____ Clear Lien Certificate

DETAILED SPECIFICATIONS

Base Bid

SCOPE OF WORK

1. Breakout and removal of existing concrete, walks, drives/road, concrete and road sub-base, sub surface drainage, existing catch basin modifications, excavation at drives and new walks, trees, grass, etc.
2. Installation of new subsurface drainage systems to be tied into existing storm drain catch basins.
3. Installation of new concrete slabs, sidewalks, pavers, etc.
4. All work indicated in the plans and specifications by ACSW Architects, dated April 01, 2020.

GENERAL CLEAN-UP
The general Contractor shall be responsible for providing a dumpster and for the proper disposal of all work associated debris at an appropriate (for the type of debris), approved landfill.

END OF SECTION

ALTERNATES
Alternate No. 1 – N/A

Alternate No. 2 – N/A

Alternate No. 3 – N/A

END OF SECTION

INSTRUCTIONS TO BIDDERS

https://www.doa.la.gov/.../24_Instructions_to_Bidders_July2018.docx

ARTICLE 1

DEFINITIONS

1.1 The Bid Documents include the following:

Advertisement for Bids (if applicable)
Instructions to Bidders
Bid Form
Bid Bond
General Conditions of the Contract for Construction,
AIA Document A201, 2017 Edition
Supplementary Conditions
Contract Between Owner and Contractor
and Performance and Payment Bond
Affidavit
User Agency Documents (if applicable)
Change Order Form
Partial Occupancy Form
Recommendation of Acceptance
Asbestos Abatement (if applicable)
Other Documents (if applicable)
Specifications & Drawings
Addenda issued during the bid period and
acknowledged in the Bid Form

1.2 All definitions set forth in the General Conditions of the Contract for Construction, AIA Document A201 and the Supplementary Conditions are applicable to the Bid Documents.

1.3 Addenda are written and/or graphic instruments issued by the Architect or Purchasing Office prior to the opening of bids, which modify or interpret the Bid Documents by additions, deletions, clarifications, corrections and prior approvals.

1.4 A bid is a complete and properly signed proposal to do the work or designated portion thereof for the sums stipulated therein supported by data called for by the Bid Documents.

1.5 Base bid is the sum stated in the bid for which the Bidder offers to perform the work described as the base, to which work may be added, or deleted for sums stated in alternate bids.

1.6 An alternate bid (or alternate) is an amount stated in the bid to be added to the amount of the base bid if the corresponding change in Project scope or materials or methods of construction described in the Bid Documents is accepted.

1.7 A Bidder is one who submits a bid for a prime Contract with the Owner for the work described in the Bid Documents.
1.8 A Sub-bidder is one who submits a bid to a Bidder for materials and/or labor for a portion of the work.

1.9 Where the word "Architect" is used in any of the documents, it shall refer to the Prime Designer of the Project, regardless of discipline.

ARTICLE 2

PRE-BID CONFERENCE

2.1 A Pre-Bid Conference shall be held at least 10 days before the date for receipt for bids. The Architect shall coordinate the setting of the date, time and place for the Pre-Bid Conference with the User Agency and shall notify in writing the

Owner and all who have received sets of the Bid Documents to attend. The purpose of the Pre-Bid Conference is to familiarize Bidders with the requirements of the Project and the intent of the Bid Documents, and to receive comments and information from interested Bidders. If the Pre-Bid Conference is stated in the Advertisement for Bids to be a Mandatory Pre-Bid Conference, bids shall be accepted only from those bidders who attend the Pre-Bid Conference. Contractors who are not in attendance for the **entire** Pre-Bid Conference will be considered to have not attended.

2.2 Any revision of the Bid Documents made as a result of the Pre-Bid Conference shall not be valid unless included in an addendum.

ARTICLE 3

BIDDER'S REPRESENTATION

3.1 Each Bidder by making his bid represents that:

3.1.1 He has read and understands the Bid Documents and his bid is made in accordance therewith.

3.1.2 He has visited the site and has familiarized himself with the local conditions under which the work is to be performed.

3.1.3 His bid is based solely upon the materials, systems and equipment described in the Bid Documents as advertised and as modified by addenda.

3.1.4 His bid is not based on any verbal instructions contrary to the Bid Documents and addenda.

3.1.5 He is familiar with Code of Governmental Ethics requirement that prohibits public servants and/or their immediate family members from bidding on or entering into contracts; he is aware that the Designer and its principal owners are considered Public Servants under the Code of Governmental Ethics for the limited purposes and scope of the Design Contract with the State on this Project (see Ethics Board Advisory Opinion, No. 2009-378 and 2010-128); and neither he nor any principal of the Bidder with a controlling interest therein has an immediate family relationship with the Designer or any principal within the Designer's firm (see La. R.S. 42:1113). Any Bidder submitting a bid in violation of this clause shall be disqualified and any contract entered into in violation of this clause shall be null and void.

3.2 The Bidder must be fully qualified under any State or local licensing law for Contractors in effect at the time and at the location of the work before submitting his bid. In the State of Louisiana, Revised Statutes 37:2150, et seq. will be considered, if applicable.
The Contractor shall be responsible for determining that all of his Sub-bidders or prospective Subcontractors are duly licensed in accordance with law.

ARTICLE 4

BID DOCUMENTS

4.1 Copies
4.1.1 Bid Documents may be obtained from the Architect for a deposit as stated in the Advertisement for Bids. The deposit will be refunded as stated in the Advertisement for Bids. <u>No deposits will be refunded on Bid Documents returned later than ten days after receipt of bids.</u>
4.1.1.2 As an alternative method of distribution, the Designer may provide the Bid Documents in electronic format. They may be obtained without charge and without deposit as stated in the Advertisement for Bids.

4.1.1.2.1 If electronic distribution is available, printed copies will not be available from the Designer, but arrangements can be made to obtain them through most reprographic firms and/or plan rooms.
4.1.1.2.2 If electronic distribution is available, the reproduction cost on the first paper plan set acquired by bona fide prime bidders will be fully refunded by the Designer upon delivery of the documents to the Designer in good condition no later than ten days after receipt of bids.

4.1.1.2.3 If electronic distribution is available, all other plan holders are responsible for their own reproduction costs.

4.1.2 Complete sets of Bid Documents shall be used in preparing bids; neither the Owner nor the Architect assume any responsibility for errors or misinterpretations resulting from the use of incomplete sets of Bid Documents.

4.1.3 The Owner or Architect in making copies of the Bid Documents available on the above terms, do so only for the purpose of obtaining bids on the work and do not confer a license or grant for any other use.

4.2 Interpretation or Correction of Bid Documents

4.2.1 Bidders shall promptly notify the Architect of any ambiguity, inconsistency or error which they may discover upon examination of the Bid Documents or of the site and local conditions.

4.2.2 Bidders requiring clarification or interpretation of the Bid Documents shall make a written request to the Architect, to reach him at least seven days prior to the date for receipt of bids.

4.2.3 Any interpretation, correction or change of the Bid Documents will be made by addendum. Interpretations, corrections or changes of the Bid Documents made in any other manner will not be binding and Bidders shall not rely upon such interpretations, corrections and changes.

4.3 Substitutions

4.3.1 The materials, products and equipment described in the Bid Documents establish a standard of required function, dimension, appearance and quality to be met by any proposed substitution. No substitutions shall be allowed after bids are received.

4.3.2 No substitution will be considered unless written request for approval has been submitted by the Proposer and has been received by the Architect at least seven (7) working days prior to the opening of bids. (La. R.S. 38:2295(C)) Each such request shall include the name of the material or equipment for which it is to be substituted and a complete description of the proposed substitute including model numbers, drawings, cuts, performance and test data and any other information necessary for an evaluation. A statement setting forth any changes in other materials, equipment or work that incorporation of the substitute would require shall be included. It shall be the responsibility of the proposer to include in his proposal all changes required of the Bid Documents if the proposed product is used. Prior approval, if given, is contingent upon supplier being responsible for any costs which may be necessary to modify the space or facilities needed to accommodate the materials and equipment approved.

4.3.3 If the Architect approves any proposed substitution, such approval shall be set forth in an addendum. Bidders shall not rely upon approvals made in any other manner.

4.4 Addenda

4.4.1 Addenda will be transmitted to all who are known by the Architect to have received a complete set of Bid Documents.

4.4.2 Copies of addenda will be made available for inspection wherever Bid Documents are on file for that purpose.

4.4.3 Except as described herein, addenda shall not be issued within a period of seventy-two (72) hours prior to the advertised time for the opening of bids, excluding Saturdays, Sundays, and any other legal holidays. If the necessity arises of issuing an addendum modifying plans and specifications within the seventy-two (72) hour period prior to the advertised time for the opening of bids, then the opening of bids shall be extended at least seven but no more than twenty-one (21) working days, without the requirement of re-advertising. UL Lafayette Purchasing shall be consulted prior to issuance of such an addendum and shall approve such issuance. The revised time and date for the opening of bids shall be stated in the addendum.

4.4.4 Each Bidder shall ascertain from the Architect prior to submitting his bid that he has received all addenda issued,

and he shall acknowledge their receipt on the Bid Form.

4.4.5 The Owner shall have the right to extend the bid date by up to (30) thirty days without the requirement of re-advertising. Any such extension shall be made by addendum issued.

ARTICLE 5

BID PROCEDURE

5.1 Form and Style of Bids

5.1.1 Bids shall be submitted on the Louisiana Uniform Public Work Bid Form provided by the Architect for this Project.

5.1.2 The Bidder shall ensure that all applicable blanks on the bid form are completely and accurately filled in.

5.1.3 Bid sums shall be expressed in both words and figures, and in case of discrepancy between the two, the written words shall govern.

5.1.4 Any interlineation, alteration or erasure must be initialed by the signer of the bid or his authorized representative.

5.1.5 Bidders are cautioned to complete all alternates should such be required on the Bid Form. Failure to submit alternate prices will render the bid non responsive and shall cause its rejection.

5.1.6 Bidders are cautioned to complete all unit prices should such be required in the Bid Form. Unit prices represent a price proposal to do a specified quantity and quality of work. Unit prices are incorporated into the base bid or alternates, as indicated on the Unit Price Form, but are not the sole components thereof.

5.1.7 Bidder shall make no additional stipulations on the Bid Form nor qualify his bid in any other manner.

5.1.8 Written evidence of the authority of the person signing the bid for the public work shall be submitted in accordance with La. R.S. 38:2212 (B)(5).

5.1.9 On any bid in excess of fifty thousand dollars ($50,000.00), the Contractor shall certify that he is licensed under La. R.S. 37: 2150-2173 and show his license number on the bid above his signature or his duly authorized representative.

5.2 Bid Security

5.2.1 No bid shall be considered or accepted unless the bid is accompanied by bid security in an amount of five percent (5.0%) of the base bid and all alternates.

The bid security shall be in the form of a certified check, cashier's check drawn on a bank insured by the Federal Deposit Insurance Corporation, or a Bid Bond written by a surety company licensed to do business in Louisiana and signed by the surety's agent or attorney-in-fact. The surety for the bond must meet the qualifications stated thereon. The Bid Bond shall include the legal name of the bidder be in favor of the University of Louisiana at Lafayette, and shall be accompanied by appropriate power of attorney. The Bid Bond must be signed by both the bidder/principal. Failure by the bidder/principal or the surety to sign the bid bond shall result in the rejection of the bid.

Bid security furnished by the Contractor shall guarantee that the Contractor will, if awarded the work according to the terms of his proposal, enter into the Contract and furnish Performance and Payment Bonds as required by these Bid Documents, within fifteen (15) days after written notice that the instrument is ready for his signature.

Should the Bidder refuse to enter into such Contract or fail to furnish such bonds, the amount of the bid security shall be forfeited to the Owner as liquidated damages, not as penalty.

5.2.2 The Owner will have the right to retain the bid security of Bidders until either (a) the Contract has been executed and bonds have been furnished, or (b) the specified time has elapsed so that bids may be withdrawn, or (c) all bids have been rejected.

5.3 Submission of Bids

See Guidelines for Electronic Submission of Bids and Virtual Bid Openings on page 4 of this solicitation.

5.3.1
The Bid shall be sealed in an opaque envelope. The bid envelope shall be identified on the outside the name, address, and license number of the Bidder.
The envelope shall not contain multiple bid forms, and will be received until the time specified and at the place specified in the Advertisement for Bids. It shall be the specific responsibility of the Bidder to deliver his sealed bid to The University at the appointed place and prior to the announced time for the opening of bids. Late delivery of a bid for any reason, including late delivery by United States Mail, or express delivery, shall disqualify the bid.

If the bid is sent by mail, the sealed envelope shall be enclosed in a separate mailing envelope with the notation "Bid Enclosed" on the face thereof. Such bids shall be sent by Registered or Certified Mail, Return Receipt Requested, addressed to:

University of Louisiana at Lafayette
Purchasing Department,
P. 0. Box 40197
Lafayette, LA 70504

Bids sent by express delivery shall be delivered to:
University of Louisiana at Lafayette
Purchasing Department
Martin Hall, Room 123
104 University Circle
Lafayette, LA 70503

IMPORTANT: Please note that courier services such as UPS, FedEx, and DHL will be UNABLE to deliver to our physical location, as the building may be locked and unstaffed.

5.3.2 Bids shall be deposited at the designated location prior to the time on the date for receipt of bids indicated in the Advertisement for Bids, or any extension thereof made by addendum. Bids received after the time and date for receipt of bids will be returned unopened.

5.3.3 Bidder shall assume full responsibility for timely delivery at location designated for receipt of bids.
5.3.4 Oral, telephonic or telegraphic bids are invalid and shall not receive consideration. Owner shall not consider notations written on outside of bid envelope which have the effect of amending the bid. Written modifications enclosed in the bid envelope, and signed or initialed by the Contractor or his representative, shall be accepted.
5.4 Modification or Withdrawal of Bid
5.4.1 A bid may not be modified, withdrawn or canceled by the Bidder during the time stipulated in the Advertisement for Bids, for the period following the time and bid date designated for the receipt of bids, and Bidder so agrees in submitting his bid, except in accordance with R.S. 38:2214 which states, in part, "Bids containing patently obvious, unintentional, and substantial mechanical, clerical, or mathematical errors, or errors of unintentional omission of a substantial quantity of work, labor, material, or services made directly in the compilation of the bid, may be withdrawn by the contractor if clear and convincing sworn, written evidence of such errors is furnished to the public entity within forty- eight hours of the bid opening excluding Saturdays, Sundays, and legal holidays".

5.4.2 Prior to the time and date designated for receipt of bids, bids submitted early may be modified or withdrawn only by notice to the party receiving bids at the place and prior to the time designated for receipt of bids.

5.4.3 Withdrawn bids may be resubmitted up to the time designated for the receipt of bids provided that they are then fully in conformance with these Instructions to Bidders.

5.4.4 Bid Security shall be in an amount sufficient for the bid as modified or resubmitted.

5.5 Prohibition of Discriminatory Boycotts of Israel

By submitting a bid, the bidder certifies and agrees that the following information is correct:

In preparing its bid, the bidder has considered all proposals submitted from qualified, potential subcontractors and suppliers, and has not, in the solicitation, selection, or commercial treatment of any subcontractor or supplier, refused to transact or terminated business activities, or taken other actions intended to limit commercial relations, with a person or entity that is engaging in commercial transactions in Israel or Israel-controlled territories, with the specific intent to accomplish a boycott or divestment of Israel. The bidder has also not retaliated against any person or other entity for reporting such refusal, termination, or commercially limiting actions. The state reserves the right to reject any bid if this certification is subsequently determined to be false and to terminate any contract awarded based on such a false response.

ARTICLE 6

CONSIDERATION OF BIDS

6.1 Opening of Bids

See Guidelines for Electronic Submission of Bids and Virtual Bid Openings on page 4 of this solicitation.

6.1.1 The properly identified Bids received on time will be opened publicly and will be read aloud, and a tabulation abstract of the amounts of the base bids and alternates, if any, will be made available to Bidders.

6.2 Rejection of Bids

6.2.1 The Owner shall have the right to reject any or all bids and in particular to reject a bid not accompanied by any required bid security or data required by the Bid Documents or a bid in any way incomplete or irregular.

6.3 Acceptance of Bid

6.3.1 It is the intent of the Owner, if he accepts any alternates, to accept them in the order in which they are listed in the Bid Form. Determination of the Low Bidder shall be on the basis of the sum of the base bid and the alternates accepted. However, the Owner shall reserve the right to accept alternates in any order which does not affect determination of the Low Bidder.

ARTICLE 7

POST-BID INFORMATION

7.1 Submissions

7.1.1 At the Pre-Construction Conference, the Contractor shall submit the following information to the Architect.

7.1.1.1 A designation of the work to be performed by the Contractor with his own forces.

7.1.1.2 A breakdown of the Contract cost attributable to each item listed in the Schedule of Values Form (attached). No payments will be made to the Contractor until this is received.

7.1.1.3 The proprietary names and the suppliers of principal items or systems of material and equipment proposed for the work.

7.1.1.4 A list of names and business domiciles of all Subcontractors, manufacturers, suppliers or other persons or organizations (including those who are to furnish materials or equipment fabricated to a special design) proposed for the principal portions of the work. It is the preference of the Owner that, to the greatest extent possible or practical, the Contractor utilize Louisiana Subcontractors, manufacturers, suppliers and labor.

7.1.2 The General Contractor shall be responsible for actions or inactions of Subcontractors and/or material suppliers.

The General Contractor is totally responsible for any lost time or extra expense incurred due to a Subcontractor's or Material Supplier's failure to perform. Failure to perform includes, but is not limited to, a Subcontractor's financial failure, abandonment of the Project, failure to make prompt delivery, or failure to do work up to standard. Under no circumstances shall the Owner mitigate the General Contractor's losses or reimburse the General Contractor for losses caused by these events.

~~7.1.3 The lowest responsive and responsible bidder shall submit to the Architect and the Owner within ten days after the bid opening a letter/letters from the manufacturer stating that the manufacturer will issue the roof system guarantee complying with the requirements of Facility Planning and Control based on the specified roof system and include the name of the applicator acceptable to the manufacturer at the highest level of certification for installing the specified roof system. This manufacturer shall be one that has received prior approval or is named in the specifications.~~

In accordance with La. R.S. 38:2227 [references La R.S. 38:2212(A)(3)(c)(ii), which has since been renumbered as La R.S. 38:2212(B)(3)], La. R.S. 38:2212.10 and La. R.S. 23:1726(B) the apparent low bidder on this Project shall submit the completed Attestations Affidavit (Past Criminal Convictions of Bidders, Verification of Employees and Certification Regarding Unpaid Workers Compensation Insurance) form found within this bid package to the University of Louisiana at Lafayette within 10 days after the opening of bids**.**

ARTICLE 8
PERFORMANCE AND PAYMENT BOND

8.1 Bond Required

8.1.1 The Contractor shall furnish and pay for a Performance and Payment Bond written by a company licensed to do business in Louisiana, which shall be signed by the surety's agent or attorney-in-fact, in an amount equal to 100% of the Contract amount. Surety must be listed currently on the U. S. Department of Treasury Financial Management Service List (Treasury List) as approved for an amount equal to or greater than the contract amount, or must be an insurance company domiciled in Louisiana or owned by Louisiana residents. If surety is qualified other than by listing on the Treasury list, the contract amount may not exceed fifteen percent of policyholders' surplus as shown by surety's most recent financial statements filed with the Louisiana Department of Insurance and may not exceed the amount of $500,000. However, a Louisiana domiciled insurance company with at least an A- rating in the latest printing of the A. M. Best's Key Rating Guide shall not be subject to the $500,000 limitation, provided that the contract amount does not exceed ten percent of policyholders' surplus as shown in the latest A. M. Best's Key Rating Guide nor fifteen percent of policyholders' surplus as shown by surety's most recent financial statements filed with the Louisiana Department of Insurance. The Bond shall be signed by the surety's agent or attorney-in-fact. The Bond shall be in favor of the University of Louisiana at Lafayette.

8.2 Time of Delivery and Form of Bond

8.2.1 The Bidder shall deliver the required bond to the Owner simultaneous with the execution of the Contract.

8.2.2 A surety company's bid bond form/document will be sufficient for any bid submission.

8.2.3 The Bidder shall require the Attorney-in-Fact who executes the required bond on behalf of the surety to affix thereto a certified and current copy of his power of Attorney.

ARTICLE 9
FORM OF AGREEMENT BETWEEN OWNER AND CONTRACTOR

9.1 Form to be Used

9.1.1 Form of the Contract to be used shall be furnished by the University of Louisiana at Lafayette, an example of which is bound in the Bid Documents.

9.2 Award

9.2.1 After award of the Contract, the successful Bidder, if a corporation, shall furnish to the Owner the most current copy of a Disclosure of Ownership Affidavit on file with the Secretary of State.

9.2.2 In accordance with Louisiana Law, when the Contract is awarded, the successful Bidder shall, at the time of the signing of the Contract, execute the Non-Collusion Affidavit included in the Contract Documents

9.2.3 When this Project is financed either partially or entirely with State Bonds, the award of this Contract is contingent upon the sale of bonds by the State Bond Commission. The State shall incur no obligation to the Contractor until the Contract Between Owner and Contractor is duly executed.

END OF SECTION

SUPPLEMENTARY CONDITIONS

https://www.doa.la.gov/.../27_Supplementary_Conditions_April2018.docx

These Supplementary Conditions modify, change, delete from or add to the General Conditions of the Contract for Construction, AIA Document A201, 2017 Edition. Where any Article of the General Conditions is modified or any Section, Paragraph, Subparagraph or Clause thereof is modified or deleted by these supplements, the unaltered provisions of that Section, Article, Paragraph, Subparagraph or Clause shall remain in effect.

Articles, Sections, Paragraphs, Subparagraphs or Clauses modified or deleted have the same numerical designation as those occurring in the General Conditions.

ARTICLE 1

GENERAL PROVISIONS

1.1 BASIC DEFINITIONS

1.1.1. The Contract Documents

In Section 1.1.1 delete the third sentence, and add the following sentence:

The Contract Documents shall include the Bid Documents as listed in the Instructions to Bidders and any modifications made thereto by addenda.

1.1.8 Initial Decision Maker

Delete all after the words, “shall not show partiality to the Owner or Contractor”.

1.5 OWNERSHIP AND USE OF DRAWINGS, SPECIFICATIONS AND OTHER INSTRUMENTS OF SERVICE [REFER TO *La R.S. 38:2317*]

1.5.1 Delete the first sentence of the paragraph.

1.5.1 In the third sentence: delete the remainder after the word “publication”.

1.7 DIGITAL DATA USE AND TRANSMISSION

In the first sentence after the words, “in digital form” delete “. The parties will use AIA Document E203 2013, Building Information Modeling and Digital Data Exhibit”.

1.8 BUILDING INFORMATION MODELS USE AND RELIANCE

Delete Section 1.8.

ARTICLE 2

OWNER

2.2 EVIDENCE OF THE OWNER'S FINANCIAL ARRANGEMENTS

Delete Section 2.2.

2.3 INFORMATION AND SERVICES REQUIRED OF THE OWNER

2.3.1 In the first sentence, delete: all before "the Owner shall secure…"

Delete Section 2.3.2 and substitute the following:

2.3.2 The term Architect, when used in the Contract Documents, shall mean the prime Designer (Architect, Engineer, or Landscape Architect), or his authorized representative, lawfully licensed to practice architecture, engineering, or landscape architecture in the State of Louisiana, identified as such in the Agreement and is referred to throughout the Contract Documents as if singular in number.

2.3.3 Delete the words: "to whom the Contractor has no reasonable objection and".

ARTICLE 3

CONTRACTOR

3.4 LABOR AND MATERIALS

3.4.2 Delete Section 3.4.2.

Delete Section 3.4.3 and substitute with the following:

3.4.3 Contractor and its employees, officers, agents, representatives, and Subcontractors shall conduct themselves in an appropriate and professional manner, in accordance with the Owner's requirements, at all times while working on the Project. Any such individual who behaves in an inappropriate manner or who engages in the use of inappropriate language or conduct while on Owner's property, as determined by the Owner, shall be removed from the Project at the Owner's request. Such individual shall not be permitted to return without the written permission of the Owner. The Owner shall not be responsible or liable to Contractor or any Subcontractor for any additional costs, expenses, losses, claims or damages incurred by Contractor or its Subcontractor as a result of the removal of an individual from the Owner's property pursuant to this Section. The Contractor shall not permit employment of unfit persons or persons not properly skilled in tasks assigned to them.

3.5 WARRANTY

3.5.2 Replace reference to "Section 9.8.4" with "Section 9.8.6".

3.7 PERMITS, FEES, NOTICES, AND COMPLIANCE WITH LAWS (La R.S. 40:1724[A])

3.7.1 Delete Section 3.7.1.

3.7.2 In Section 3.7.2, replace the word "public" with the word "State".

Delete Section 3.7.5 and substitute the following:

3.7.5 If, during the course of the Work, the Contractor discovers human remains, unmarked burial or archaeological sites, burial artifacts, or wetlands, which are not indicated in the Contract Documents, the Contractor shall follow all procedures mandated by State and Federal law, including but not limited to La R.S. 8:671 et seq., the Office of Coastal Protection and Restoration, and Sections 401 & 404 of the Federal Clean Water Act. Request for adjustment of the Contract Sum and Contract Time arising from the existence of such remains or features shall be submitted in writing to the Owner pursuant to the Contract Documents.

3.8 ALLOWANCES

Delete Sections 3.8.1, 3.8.2, and 3.8.3 in their entirety and add the following new Section 3.8.1:

3.8.1 Allowances shall not be made on any of the Work.

3.9 SUPERINTENDENT

3.9.1 Add the following to the end of the paragraph:
Important communications shall be confirmed in writing. Other communications shall be similarly confirmed on written request in each case.

3.10 CONTRACTOR'S CONSTRUCTION AND SUBMITTAL SCHEDULES

3.10.1 Add the following: For Projects with a contract sum greater than $1,000,000.00, the Contractor shall include with the schedule, for the Owner's and Architect's information, a network analysis to identify those tasks which are on the critical path, i.e., where any delay in the completion of these tasks will lengthen the Project timescale, unless action is taken. A revised schedule shall be submitted with each Application and Certificate for Payment. No payment shall be made until this schedule is received.

3.10.3 In the first sentence, delete the word "general".

After the first sentence, add the following:
If the Work is not on schedule, as determined by the Architect, and the Contractor fails to take action to bring the Work on schedule, then the Contractor shall be deemed in default under this Contract and the progress of the Work shall be deemed unsatisfactory. Such default may be considered grounds for termination by the Owner for cause in accordance with Section 14.2.

Add the following Sections:

3.10.4 Add the following: Submittal by the contractor of a schedule or other documentation showing a completion date for his Work prior to the completion date stated in the contract shall not impose any obligation or responsibility on the Owner or Architect for the earlier completion date.

3.10.5 In the event the Owner employs a commissioning consultant, the Contractor shall cooperate fully in the commissioning process and shall require all subcontractors and others under his control to cooperate. The purpose of such services shall be to ensure that all systems perform correctly and

interactively according to the provisions of the Contract Documents.

3.11 DOCUMENTS AND SAMPLES AT THE SITE

Add the following: This requirement is of the essence of the contract. The Architect shall determine the value of these documents and this amount shall not be approved for payment to the Contractor until all of the listed documents are delivered to the Architect in good order, completely marked with field changes and otherwise complete in all aspects.

ARTICLE 4

ARCHITECT

4.2 ADMINISTRATION OF THE CONTRACT

4.2.1 In the first sentence, delete the phrase: "the date the Architect issues the final Certificate for Payment" and replace with the phrase "final payment is due, and with the Owner's concurrence, from time to time during the one year period for correction of Work described in Section 12.2."

4.2.2 In the first sentence, after the phrase: "become generally familiar with"; insert the following: "and to keep the Owner informed about".

In the first sentence, after the phrase "portion of the Work completed", insert the following: "to endeavor to guard the Owner against defects and deficiencies in the Work,"

4.2.4 In the first sentence, delete all after "The Owner and Contractor", and add the following "may communicate directly with each other, when deemed necessary by the Owner, and the Owner will notify the Architect of any decision."

4.2.10 Add the following sentence to the end of Section 4.2.10: There shall be no restriction on the Owner having a Representative.

4.2.11 Add the following sentence to the end of Section 4.2.11:
If no agreement is made concerning the time within which interpretation required of the Architect shall be furnished in compliance with this Section 4.2, then delay shall not be recognized on account of failure by the Architect to furnish such interpretation until 15 days after written request is made for them.

4.2.14 Insert the following sentence between the second and third sentences of Section 4.2.14:
If no agreement is made concerning the time within which interpretation required of the Architect shall be furnished in compliance with this Section 4.2, then delay shall not be recognized on account of failure by the Architect to furnish such interpretation until 15 days after written request is made for them.

ARTICLE 5

SUBCONTRACTORS

5.2 AWARD OF SUBCONTRACTS AND OTHER CONTRACTS FOR PORTIONS OF THE WORK

Delete Section 5.2.1, and substitute the following:

5.2.1 Unless otherwise required by the Contract Documents, the Contractor shall furnish at the Pre-Construction Conference, to the Owner and the Architect, in writing, the names of the persons or entities (including those who are to furnish materials or equipment fabricated to a special design) proposed for each of the principal portions of the Work. No Contractor payments shall be made until this information is received.

Delete Section 5.2.2, and substitute the following:

5.2.2 The Contractor shall be solely responsible for selection and performance of all subcontractors. The Contractor shall not be entitled to claims for additional time and/or an increase in the contract sum due to a problem with performance or nonperformance of a subcontractor.

Delete Sections 5.2.3 and 5.2.4 and substitute the following:

5.2.3 The Contractor shall notify the Architect and the Owner when a subcontractor is to be changed and substituted with another subcontractor.

5.4 CONTINGENT ASSIGNMENT OF SUBCONTRACTS

Delete Sections 5.4, 5.4.1, 5.4.2 and 5.4.3

ARTICLE 7

CHANGES IN THE WORK

7.1 GENERAL

Add the following Sections:

7.1.4 As part of the pre-construction conference submittals, the Contractor shall submit the following prior to the Contractor's initial request for payment:

7.1.4.1 Fixed job site overhead cost itemized with documentation to support daily rates.

7.1.4.2 Bond Premium Rate with supporting information from the General Contractor's carrier.

7.1.4.3 Labor Burden by trade for both Subcontractors and General Contractor. The Labor Burden shall be supported by the Worker's Compensation and Employer's Liability Insurance Policy Information Page. Provide for all trades.

7.1.4.4 Internal Rate Charges for all significant company owned equipment.

7.1.5 If the General Contractor fails to submit the aforementioned documentation as part of the pre-construction submittals, then pay applications shall not be processed until such time as the Owner receives this information.

7.2 CHANGE ORDERS

Delete Section 7.2.1, and substitute the following Sections:

7.2.1 A Change Order is a written instrument prepared by the Architect and signed by the Owner, the Architect, and the Contractor issued after execution of the Contract, authorizing a change in the Work and/or an adjustment in the Contract Sum and/or the Contract Time. The Contract Sum and the Contract Time may be changed only by Change Order. A Change Order signed by the

Contractor indicates his agreement therewith, including the adjustment in the Contract Sum or the Contract Time. Any reservation of rights, stipulation, or other modification made on the change order by the contractor shall have no effect.

7.2.2 "Cost of the Work" for the purpose of Change Orders shall be the eligible costs required to be incurred in performance of the Work and paid by the Contractor and Subcontractors which eligible costs shall be limited to:

7.2.2.1 Actual wages paid directly to labor personnel, with a labor burden markup exclusively limited to applicable payroll taxes, worker's compensation insurance, unemployment compensation, and social security taxes for those labor personnel performing the Work. Wages shall be the basic hourly labor rate paid an employee exclusive of fringe benefits or other employee costs. The labor burden percentage for the "Cost of the Work" is limited to categories listed herein. Employer-provided health insurance, fringe benefits, employee training (whether a requirement of employment or not), vacation pay, etc., are examples of ineligible labor burden costs which ***shall not*** be included, as these costs are already compensated by the Overhead and Profit markup.

Supervision shall not be included as a line item in the "Cost of the Work", except when the change results in a documented delay in the critical path, as described in Section 7.2.7.

7.2.2.2 Cost of all materials and supplies necessary and required to perform the Work, identifying each item and its individual cost, including taxes. Incidental consumables are not eligible costs and shall not be included.

7.2.2.3 Cost of each necessary piece of machinery and equipment required to perform the Work, identifying each item and its individual cost, including taxes. Incidental small tools of a specific trade (i.e., shovels, saws, hammers, air compressors, etc.,) and general use vehicles, such as pickup trucks even for moving items around the site, fuel for these general use vehicles, travel, lodging, and/or meals are not eligible and shall not be included.

7.2.2.4 Eligible Insurance costs shall be limited to documented increases in "Builder's Risk" insurance premium / costs only. Commercial General Liability, Automobile Liability, and all other required insurances, where referenced in the Contract shall be considered part of normal overhead. These costs are already compensated by the Overhead and Profit markup.

7.2.2.5 Cost for the General Contractor Performance and Payment Bond premium, where the documented cost of the premiums have been increased due to the Change Order.

7.2.3 Overhead and Profit - The Contractor and Subcontractor shall be due home office fixed overhead and profits on the Cost of the Work, but shall not exceed a total of 16% of the direct cost of any portion of Work.

The credit to the Owner resulting from a change in the Work shall be the sum of those items above, except credit will not be required for Overhead and Profit. Where a change results in both credits to the Owner and extras to the Contractor for related items, overhead and profit shall only be computed on the net extra cost to the Contractor.

7.2.4 The cost to the Owner resulting from a change in the Work shall be the sum of: Cost of the Work (as defined at Section 7.2.2) and Overhead and Profit (as defined at Section 7.2.3), and shall be computed as follows:

7.2.4.1 When all of the Work is General Contractor Work; 8% markup on the Cost of the Work.

7.2.4.2 When the Work is all Subcontract Work; 8% markup on the Cost of the Work for Subcontractor's Overhead and Profit, plus 8% markup on the Cost of the Work, not including the Subcontractor's Overhead and Profit markup, for General Contractor's Overhead and Profit.

7.2.4.3 When the Work is a combination of General Contractor Work and Subcontract Work; that portion of the direct cost that is General Contract Work shall be computed per Section 7.2.4.1 and that portion of the direct cost that is Subcontract Work shall be computed per Section 7.2.4.2.

Premiums for the General Contractor's bond may be included, but after the markup is added to the Cost of the Work.
Premiums for the Subcontractor's Bond shall not be included.

7.2.4.4 Subcontract cost shall consist of the items in Section 7.2.2 above plus Overhead and Profit as defined in Section 7.2.3.

7.2.5 Before a Change Order is prepared, the Contractor shall prepare and deliver to the Architect the following information concerning the Cost of the Work, not subject to waiver, within a reasonable time after being notified to prepare said Change Order:

A detailed, itemized list of labor, material and equipment costs for the General Contractor's Work including quantities and unit costs for each item of labor, material and equipment.

An itemized list of labor, material and equipment costs for each Subcontractor's and/or Sub-Subcontractor's Work including quantities and unit costs for each item of labor, material and equipment.

7.2.6 After a Change Order has been approved, no future requests for extensions of time or additional cost shall be considered for that Change Order.

7.2.7 Extended fixed job-site costs are indirect costs that are necessary to support the work in the field. Examples of fixed job-site costs are field office rental, salaries of field office staff, field office utilities and telephone.

Extended fixed job-site costs or equitable adjustment, may be included in a Change Order due to a delay in the critical path, with the exception of weather related delays. In the event of a delay in the critical path, the Contractor shall submit all changes or adjustments to the Contract Time **within twenty-one (21) days** of the event giving rise to the delay. The Contractor shall submit documentation and justification for the adjustment by performing a critical path analysis of its most recent schedule in use prior to the change, which shows an extension in critical path activities. The Contractor shall notify the Architect in writing that the Contractor is making a claim for extended fixed job-site overhead as required by Section 15.1.2. The Contractor shall provide proof

that the Contractor is unable to mitigate financial damages through Alternate Work within this Contract or replacement work. "Replacement Work" is that work which the Contractor is obligated to perform under any construction contract separate from this Contract. Reasonable proof shall be required by the Architect that the delays affected the Completion Date.

7.2.8 "Cost of the Work" whether General Contractor cost or Subcontractor cost shall not apply to the following:

7.2.8.1 Salaries or other compensation of the Contractor's personnel at the Contractor's principal office and branch offices.

7.2.8.2 Any part of the Contractor's capital expenses, including interest on the Contractor's capital employed for the Work.

7.2.8.3 Overhead and general expenses of any kind or the cost of any item not specifically and expressly included above in Cost of the Work.

7.2.8.4 Cost of supervision, refer to section 7.2.2.1, with exception as provided in Section 7.2.7.

7.2.9 When applicable as provided by the Contract, the cost to Owner for Change Orders shall be determined by quantities and unit prices. The quantity of any item shall be as submitted by the Contractor and approved by the Architect. Unit prices shall cover cost of Material, Labor, Equipment, Overhead and Profit.

7.3 CONSTRUCTION CHANGE DIRECTIVES

7.3.3 In the first sentence after "following methods" insert: ", but not to exceed a specified amount".

7.3.4 From .1 of the list, delete all after "Costs of labor, including" and substitute the following "social security, old age and employment insurance, applicable payroll taxes, and workers' compensation insurance;"

Delete the following from .4 of the list: "permit fees,"
Delete Section 7.3.9 and substitute the following:

7.3.9 Pending final determination of the total costs of a Construction Change Directive to the Owner, amounts not in dispute for such changes in the Work shall be included in Applications for Payment accompanied by a Change Order indicating the parties' agreement with part or all of such costs.

ARTICLE 8
TIME

8.1 DEFINITIONS

Add the following:

8.1.5 The Contract Time shall not be changed by the submission of a schedule that shows an early completion date unless specifically authorized by change order.

8.2 PROGRESS AND COMPLETION

Add to Section 8.2.1 the following:

Completion of the Work must be within the Time for Completion stated in the Agreement, subject to such extensions as may be granted under Section 8.3. The Contractor agrees to commence Work not later than fourteen (14) days after the transmittal date of Written Notice to Proceed from the Owner and to substantially complete the Project within the time stated in the Contract. The Owner will suffer financial loss if the Project is not substantially complete in the time set forth in the Contract Documents. The Contractor and the Contractor's Surety shall be liable for and shall pay to the Owner the sum stated in the Contract Documents as fixed, agreed and liquidated damages for each consecutive calendar day (Saturdays, Sundays and holidays included) of delay until the Work is substantially complete. The Owner shall be entitled to the sum stated in the Contract Documents. Such Liquidated Damages shall be withheld by the Owner from the amounts due the Contractor for progress payments.

Delete Section 8.2.2.

8.3 DELAYS AND EXTENSIONS OF TIME

8.3.1 In the first sentence after the words "Owner pending" delete the words "mediation and binding dispute resolution" and add the word "litigation", and delete the last word "determine" and add the following: "recommend, subject to Owner's approval of Change Order. If the claim is not made within the limits of Article 15, all rights for future claims for that month are waived."

ARTICLE 9

PAYMENTS AND COMPLETION

9.1 CONTRACT SUM

Delete Section 9.1.2.

Delete Section 9.2 and substitute the following:

9.2 SCHEDULE OF VALUES

At the Pre-Construction Conference, the Contractor shall submit to the Owner and the Architect a Schedule of Values prepared as follows:

9.2.1 The attached Schedule of Values Format shall be used. If applicable, the cost of Work for each section listed under each division, shall be given. The cost for each section shall include Labor, Materials, Overhead and Profit.

9.2.2 The Total of all items shall equal the Total Contract Sum. This schedule, when approved by the Architect, shall be used as a basis for the Contractor's Applications for Payment and it may be used for determining the cost of the Work in deductive change orders, when a specific item of Work listed on the Schedule of Values is to be removed. Once the Schedule of Values is submitted at the Pre-Construction Conference, the schedule shall not be modified without approval from the Owner and Architect.

9.3 APPLICATIONS FOR PAYMENT

Delete Sections 9.3.1, 9.3.1.1, and 9.3.1.2 and substitute the following:

9.3.1 Monthly, the Contractor shall submit to the Architect an Application & Certificate for Payment on the AIA Document G702-1992, accompanied by AIA Document G703-1992, and supported by any additional data substantiating the Contractor's right to payment as the Owner or

the Architect may require. Application for Payment shall be submitted on or about the first of each month for the value of labor and materials incorporated into the Work and of materials, suitably stored, at the site as of the twenty-fifth day of the preceding month, less normal retainage as follows, per La R.S. 38:2248:

9.3.1.1 Projects with Contract price up to $500,000.00 – 10% of the Contract price.

9.3.1.2 Projects with Contract price of $500,000.00, or more – 5% of the Contract price.

9.3.1.3 No payment shall be made until the revised schedule required by Section 3.10.1 is received.

9.3.1.4 The normal retainage shall not be due the Contractor until after substantial completion and expiration of the forty-five day lien period and submission to the Architect of a clear lien certificate, consent of surety, and invoice for retainage.

Delete Section 9.3.2 and substitute the following:

9.3.2 Unless otherwise provided in the Contract Documents, payments shall be made on account of materials and equipment delivered and suitably stored at the site for subsequent incorporation in the Work. Payments for materials or equipment stored on the site shall be conditioned upon submission by the Contractor of bills of sale or such other procedures satisfactory to the Owner to establish the Owner's title to such materials and equipment or otherwise protect the Owner's interest, including applicable insurance.

9.5 DECISIONS TO WITHHOLD CERTIFICATION

Section 9.5.1.7: Delete the word "repeated".

Delete Section 9.5.4.

9.6 PROGRESS PAYMENTS

Delete Section 9.6.1 and substitute the following:

9.6.1 After the Architect has issued a Certificate for Payment, the Owner shall make payment within twenty days except for Projects funded fully or in part by a Federal reimbursement program. For such Projects the Owner will make payment in a timely manner consistent with reimbursement.

9.6.2 Delete the phrase: "no later than seven days" from the first sentence.

After the end of the second sentence, add the following:

La R.S. 9:2784 (A) and (C) require a Contractor or Subcontractor to make payment due to each Subcontractor and supplier within fourteen (14) consecutive days of the receipt of payment from the Owner. If not paid, a penalty in the amount of ½ of 1% per day is due, up to a maximum of 15% from the expiration date until paid. The contractor or subcontractor, whichever is applicable, is solely responsible for payment of a penalty.

9.6.4 Delete the first two sentences of Section 9.6.4 and add the following to the end of the Section:

Pursuant to La. R.S. 38:2242 and La. R.S. 38:2242.2, when the Owner receives any claim of nonpayment arising out of the Contract, the Owner shall deduct 125% of such claim from the Contract Sum. The Contractor, or any interested party, may deposit security, in accordance with

La. R.S. 38:2242.2, guaranteeing payment of the claim with the recorder of mortgages of the parish where the Work has been done. When the Owner receives original proof of such guarantee from the recorder of mortgages, the claim deduction will be added back to the Contract Sum.

Delete Section **9.7 FAILURE OF PAYMENT**.

Delete Section 9.8 and substitute the following:

9.8 SUBSTANTIAL COMPLETION

9.8.1 Substantial Completion is the stage in the progress of the Work when the Work is sufficiently complete in accordance with the Contract Documents so that the Owner can occupy or utilize the Work for its intended use. The Architect shall determine if the Project is substantially complete in accordance with this Section.

9.8.2 When the Contractor considers that the Work is Substantially Complete, the Contractor shall prepare and submit to the Architect a comprehensive list of items to be completed or corrected prior to final payment. Failure to include an item on such list does not alter the responsibility of the Contractor to complete all Work in accordance with the Contract Documents.

9.8.3 Upon receipt of the Contractor's list, the Architect shall make an inspection to determine whether the Work is substantially complete. A prerequisite to the Work being considered as substantially complete is the Owner's receipt of the executed Roofing Contractor's and Roofing Manufacturer's guarantees, where roofing Work is part of the Contract. Prior to inspection by the Architect, the Contractor shall notify the Architect that the Project is ready for inspection by the State Fire Marshal's office. If the Architect's inspection discloses any item, whether or not included on the Contractor's list, which is not sufficiently complete in accordance with the Contract Documents so that the Owner can occupy or utilize the Work for its intended use, the Contractor shall, before the Work can be considered as Substantially Complete, complete or correct such item upon notification by the Architect. In such case, the Contractor shall then submit a request for another inspection by the Architect to determine Substantial Completion.

9.8.4 When the Architect determines that the Project is Substantially Complete, he shall prepare a punch list of exceptions and the dollar value related thereto. The monetary value assigned to this list will be the sum of the cost estimate for each particular item of Work the Architect develops based on the mobilization, labor, material and equipment costs of correcting the item and shall be retained from the monies owed the contractor, above and beyond the standard lien retainage. The cost of these items shall be prepared in the same format as the schedule of values. At the end of the forty-five day lien period payment shall be approved for all punch list items completed up to that time. After that payment, none of the remaining funds shall be due the contractor until all punch list items are completed and are accepted by the Architect. If the dollar value of the punch list exceeds the amount of funds, less the retainage amount, in the remaining balance of the Contract, then the Project shall not be considered as substantially complete. If funds remaining are less than that required to complete the Work, the Contractor shall pay the difference.

9.8.5 When the preparation of the punch list is complete the Architect shall prepare a Recommendation of Acceptance incorporating the punch list and submit it to the Owner. Upon approval of the Recommendation of Acceptance, the Owner may issue a Notice of Acceptance of

Building Contract which shall establish the Date of Substantial Completion. The Contractor shall record the Notice of Acceptance with the Clerk of Court in the Parish in which the Work has been performed. If the Notice of Acceptance has not been recorded seven (7) days after issuance, the Owner may record the Acceptance at the Contractor's expense. All additive change orders must be processed before issuance of the Recommendation of Acceptance. The Owner shall not be responsible for payment for any Work associated with change orders that is not incorporated into the contract at the time of the Recommendation of Acceptance.

9.8.6 Warranties required by the Contract Documents shall commence on the date of Acceptance of the Work unless otherwise agreed to in writing by the Owner and Contractor. Unless otherwise agreed to in writing by the Owner and Contractor, security, maintenance, heat, utilities, damage to the Work not covered by the punch list and insurance shall become the Owner's responsibility on the Date of Substantial Completion.

9.8.7 If all punch list items have not been completed by the end of the forty-five (45) day lien period, through no fault of the Architect or Owner, the Owner may hold the Contractor in default. If the Owner finds the Contractor is in default, the Surety shall be notified. If within forty-five (45) days after notification, the Surety has not completed the punch list, through no fault of the Architect or Owner, the Owner may, at his option, contract to have the balance of the Work completed and pay for such Work with the unpaid funds remaining in the Contract sum. Finding the Contractor in default shall constitute a reason for disqualification of the Contractor from bidding on future state contracts. If the surety fails to complete the punch list within the stipulated time period, the Owner may not accept bonds submitted, in the future, by the surety.

9.9 PARTIAL OCCUPANCY OR USE

Delete Section 9.9.1 and substitute the following:

9.9.1 Partial Occupancy is that stage in the progress of the Work when a designated portion of the Work is sufficiently complete in accordance with the Contract Documents so the Owner can occupy or utilize the designated portion of the Work for its intended use. The Owner may occupy or use any substantially completed portion of the Work so designated by separate agreement with the Contractor and authorized by public authorities having jurisdiction over the Work. Such occupancy or use may commence provided the Owner and Contractor have accepted in writing the responsibilities assigned to each of them for payments, if any, security, maintenance, heat, utilities, damage to the Work and insurance, and have agreed in writing concerning the period for correction of the Work and commencement of warranties required by the Contract Documents. When the Contractor considers the designated portion substantially complete the Contractor shall prepare and submit a list to the Architect as provided under Section 9.8.2. Consent of the Contractor to partial occupancy or use shall not be unreasonably withheld.

9.10 FINAL COMPLETION AND FINAL PAYMENT

9.10.1 After the second sentence, add the following:

If the Architect does not find the Work acceptable under the Contract Documents, the Architect shall make one additional inspection; if the Work is still not acceptable, the Architect, and each of the Architect's principal consultants, shall be paid <u>$175.00/hour</u> for their time at the Project site, for each additional inspection, to be withheld from the unpaid funds remaining in the Contract sum. The payment shall be made by the Owner and deducted from the construction contract funds.

Delete Section 9.10.4 and replace with the following:

9.10.4 The making of final payment shall not constitute a waiver of Claims by the Owner for the following:

9.10.4.1 Claims, security interests, or encumbrances arising out of the Contract and unsettled;

9.10.4.2 failure of the Work to comply with the requirements of the Contract Documents irrespective of when such failure is discovered;

9.10.4.3 terms of special warranties required by the Contract Documents; or

9.10.4.4 audits performed by the Owner, after final payment.

ARTICLE 10

PROTECTION OF PERSONS AND PROPERTY

10.2 SAFETY OF PERSONS AND PROPERTY

10.2.2 In the first sentence, between the words: "bearing on" and "safety", add the words: "the health and,"

10.3 HAZARDOUS MATERIALS

10.3.1 In the second sentence after (PCB) add: "or lead".

10.3.2 After the first sentence, delete all remaining sentences.

Add at the end: "The Contract time shall be extended appropriately."

Delete Section 10.4 and substitute the following:

10.4 EMERGENCIES

In an emergency affecting the safety of persons or property, the Contractor shall notify the Owner and Architect immediately of the emergency, simultaneously acting at his discretion to prevent damage, injury or loss. Any additional compensation or extension of time claimed by the Contractor on account of emergency Work shall be determined as provided in Article 15 and Article 7.

ARTICLE 11
INSURANCE AND BONDS

AIA A101 – 2017 Exhibit A is not a part of these documents. Delete all of Sections 11.1, 11.2, 11.3, 11.4, and 11.5, and substitute the following:

INSURANCE REQUIREMENTS FOR NEW CONSTRUCTION, ADDITIONS AND RENOVATIONS

11.1 CONTRACTOR'S LIABILITY INSURANCE

The Contractor shall purchase and maintain without interruption for the duration of the contract insurance against claims for injuries to persons or damages to property which may arise from or in

connection with the performance of the Work hereunder by the Contractor, its agents, representatives, employees or subcontractors. The duration of the contract shall be from the inception of the contract until the date of final payment.

11.2 MINIMUM SCOPE AND LIMITS OF INSURANCE

11.2.1 Worker's Compensation

Worker's Compensation insurance shall be in compliance with the Worker's Compensation law of the Contractor's headquarters. Employers Liability is included with a minimum limit of $1,000,000 per accident/per disease/per employee. If Work is to be performed over water and involves maritime exposure, applicable LHWCA, Jones Act or other maritime law coverage shall be included. A.M. Best's insurance company rating requirement may be waived for Worker's compensation coverage only.

11.2.2 Commercial General Liability

Commercial General Liability insurance, including Personal and Advertising Injury Liability and Products and Completed Operations Liability, shall have a minimum limit per occurrence based on the Project value. The Insurance Services Office (ISO) Commercial General Liability occurrence coverage form CG 00 01 (current form approved for use in Louisiana), or equivalent, is to be used in the policy. Claims-made form is unacceptable.
The aggregate loss limit must apply to each Project. ISO form CG 25 03 (current form approved for use in Louisiana), or equivalent, shall also be submitted. The State Project number, including part number, and Project name shall be included on this endorsement.

COMBINED SINGLE LIMIT (CSL) PER OCCURRENCE

Type of Construction	**Projects up to $1,000,000**	**Projects over $1,000,000 up to $50,000,000**	**Projects over $50,000,000**
New Buildings:			
Each Occurrence Minimum Limit	$1,000,000	$2,000,000	$4,000,000
Per Project Aggregate	$2,000,000	$4,000,000	$8,000,000
Renovations:	**The building(s) value for the Project is $_____.**		
Each Occurrence Minimum Limit	$1,000,000**	$2,000,000**	$4,000,000**
Per Project Aggregate	2 times per occur limit**	2 times per occur limit**	2 times per occur limit**

**While the minimum Combined Single Limit of $1,000,000 is required for any renovation, the limit is calculated by taking 10% of the building value and rounding it to the nearest $1,000,000 to get the insurance limit. Example: Renovation on a $33,000,000 building would have a calculated $3,000,000 combined single limit of coverage (33,000,000 times .10 = 3,300,000 and then rounding down to $3,000,000). If the calculated limit is less than the minimum limit listed in the above chart, then the amount needed is the minimum listed in the chart. Maximum per occurrence limit required is $50,000,000 regardless of building value. The per Project aggregate limit is then calculated as twice the per occurrence limit.

11.2.3 Automobile Liability

Automobile Liability Insurance shall have a minimum combined single limit per occurrence of $1,000,000. ISO form number CA 00 01 (current form approved for use in Louisiana), or equivalent, is to be used in the policy. This insurance shall include third-party bodily injury and property damage liability for owned, hired and non-owned Automobiles.

11.2.4 Excess Umbrella

Excess Umbrella Insurance may be used to meet the minimum requirements for General Liability and Automobile Liability only.

11.2.5 Builder's Risk

11.2.5.1 Builder's Risk Insurance shall be in an amount equal to the amount of the construction contract including any amendments and shall be upon the entire Work included in the contract. The policy shall provide coverage equivalent to the ISO form number CP 10 20, Broad Form Causes of Loss (extended, if necessary, to include the perils of wind, earthquake, collapse, vandalism/malicious mischief, and theft, including theft of materials whether or not attached to any structure). The policy must include architects' and engineers' fees necessary to provide plans, specifications and supervision of Work for the repair and/or replacement of property damage caused by a covered peril, not to exceed 10% of the cost of the repair and/or replacement.

11.2.5.2 Flood coverage shall be provided by the Contractor on the first floor and below for all Projects, except as otherwise noted. The builder's risk insurance policy, sub-limit for flood coverage shall not be less than ten percent (10%) of the total contract cost per occurrence. If flood is purchased as a separate policy, the limit shall be ten percent (10%) of the total contract cost per occurrence (with a max of $500,000 if NFIP). Coverage for roofing Projects shall **not** require flood coverage.

11.2.5.3 A Specialty Contractor may provide an installation floater in lieu of a Builder's Risk policy, with the similar coverage as the Builder's Risk policy, upon the system to be installed in an amount equal to the amount of the contract including any amendments. Flood coverage is not required.

11.2.5.4 The policy must include coverage for the Owner, Contractor and any subcontractors as their interests may appear.

11.2.6 Pollution Liability *(required when asbestos or other hazardous material abatement is included in the contract)*

Pollution Liability insurance, including gradual release as well as sudden and accidental, shall have a minimum limit of not less than $1,000,000 per claim. A claims-made form will be acceptable. A policy period inception date of no later than the first day of anticipated Work under this contract and an expiration date of no earlier than 30 days after anticipated completion of all Work under the contract shall be provided. There shall be an extended reporting period of at least 24 months, with full reinstatement of limits, from the expiration date of the policy if the policy is not renewed. The policy shall not be cancelled for any reason, except non-payment of premium.

11.2.7 Deductibles and Self-Insured Retentions

Any deductibles or self-insured retentions must be declared to and accepted by the Owner. The Contractor shall be responsible for all deductibles and self-insured retentions.

11.3 OTHER INSURANCE PROVISIONS

11.3.1 The policies are to contain, or be endorsed to contain, the following provisions:

11.3.1.1 Worker's Compensation and Employers Liability Coverage

11.3.1.1.1 To the fullest allowed by law, the insurer shall agree to waive all rights of subrogation against the Owner, its officers, agents, employees and volunteers for losses arising from Work performed by the Contractor for the Owner.

11.3.1.2 Commercial General Liability Coverage

11.3.1.2.1 The Owner, its officers, agents, employees and volunteers are to be added as additional insureds as respects liability arising out of activities performed by or on behalf of the Contractor; products and completed operations of the Contractor, premises owned, occupied or used by the Contractor. ISO Form CG 20 10 (for ongoing work) AND CG 20 37 (for completed work) (current forms approved for use in Louisiana), or equivalent, are to be used.

11.3.1.2.2 The Contractor's insurance shall be primary as respects the Owner, its officers, agents, employees and volunteers for any and all losses that occur under the contract. The coverage shall contain no special limitations on the scope of protection afforded to the Owner, its officers, officials, employees or volunteers. Any insurance or self-insurance maintained by the Owner shall be excess and non-contributory of the Contractor's insurance.

11.3.1.3 Builder's Risk

The policy must include an endorsement providing the following:
In the event of a disagreement regarding a loss covered by this policy, which may also be covered by a State of Louisiana self-insurance or commercial property policy through the Office of Risk Management (ORM), Contractor and its insurer agree to follow the following procedure to establish coverage and/or the amount of loss:

Any party to a loss may make written demand for an appraisal of the matter in disagreement. Within 20 days of receipt of written demand, the Contractor's insurer and either ORM or its commercial insurance company shall <u>each</u> select a competent and impartial appraiser and notify the other of the appraiser selected. The two appraisers shall select a competent and impartial umpire. The appraisers shall then identify the policy or policies under which the loss is insured and, if necessary, state separately the value of the property and the amount of the loss that must be borne by each policy. If the two appraisers fail to agree, they shall submit their differences to the umpire. A written decision by any two shall determine the policy or policies and the amount of the loss. Each insurance company agrees that the decision of the appraisers and the umpire if involved shall be binding and final and that neither party will resort to litigation. Each of the two parties shall pay its chosen appraiser and bear the cost of the umpire equally.

11.3.1.4 All Coverages

11.3.1.4.1 All policies must be endorsed to require 30 days written notice of cancellation to the Agency. Ten-day written notice of cancellation is acceptable for non-payment of premium. Notifications shall comply with the standard

cancellation provisions in the Contractor's policy. In addition, Contractor is required to notify Agency of policy cancellations or reductions in limits.

11.3.1.4.2 Neither the acceptance of the completed Work nor the payment thereof shall release the Contractor from the obligations of the insurance requirements or indemnification agreement.

11.3.1.4.3 The insurance companies issuing the policies shall have no recourse against the Owner for payment of premiums or for assessments under any form of the policies.

11.3.1.4.4 Any failure of the Contractor to comply with reporting provisions of the policy shall not affect coverage provided to the Owner, its officers, agents, employees and volunteers.

11.3.2 Acceptability of Insurers

All required insurance shall be provided by a company or companies lawfully authorized to do business in the jurisdiction in which the Project is located. Insurance shall be placed with insurers with an A.M. Best's rating of **A-: VI or higher**. This rating requirement may be waived for Worker's compensation coverage only.

If at any time an insurer issuing any such policy does not meet the minimum A.M. Best rating, the Contractor shall obtain a policy with an insurer that meets the A.M. Best rating and shall submit another certificate of insurance within 30 days.

11.3.3 Verification of Coverage

Contractor shall furnish the Owner with Certificates of Insurance reflecting proof of required coverage. The Certificates for each insurance policy are to be signed by a person authorized by that insurer to bind coverage on its behalf. The Certificates are to be received and approved by the Owner before Work commences and upon any contract renewal or insurance policy renewal thereafter. The Certificate Holder must be listed as follows:

State of Louisiana
University of Louisiana at Lafayette
PO Box 40197
Lafayette, LA 70504
Ref: Solicitation File No. _____

The Owner reserves the right to request complete certified copies of all required insurance policies at any time.

Upon failure of the Contractor to furnish, deliver and maintain required insurance, this contract, at the election of the Agency, may be suspended, discontinued, or terminated. Failure of the Contractor to purchase and/or maintain any required insurance shall not relieve the Contractor from any liability or indemnification under the contract.

If the Contractor does not meet the insurance requirements at policy renewal, at the option of the Owner, payment to the Contractor may be withheld until the requirements have been met, OR the Owner may pay the renewal premium and withhold such payment from any monies due the Contractor, OR the contract may be suspended or terminated for cause.

11.3.4 Subcontractors

Contractor shall include all subcontractors as insureds under its policies OR shall be responsible for verifying and maintaining the certificates provided by each subcontractor. Subcontractors shall be subject to all of the requirements stated herein. The Owner reserves the right to request copies of subcontractor's certificates at any time.

If Contractor does not verify subcontractors' insurance as described above, Owner has the right to withhold payments to the Contractor until the requirements have been met.

11.3.5 Worker's Compensation Indemnity

In the event Contractor is not required to provide or elects not to provide Worker's compensation coverage, the parties hereby agree the Contractor, its Owners, agents and employees shall have no cause of action against, and shall not assert a claim against, the state of Louisiana, its departments, agencies, agents and employees as an employer, whether pursuant to the Louisiana Worker's Compensation Act or otherwise, under any circumstance. The parties also hereby agree that the State of Louisiana, its departments, agencies, agents and employees shall in no circumstance be, or considered as, the employer or statutory employer of Contractor, its Owners, agents and employees. The parties further agree that Contractor is a wholly independent Contractor and is exclusively responsible for its employees, Owners, and agents. Contractor hereby agrees to protect, defend, indemnify and hold the State of Louisiana, its departments, agencies, agents and employees harmless from any such assertion or claim that may arise from the performance of this contract.

11.3.6 Indemnification/Hold Harmless Agreement

Contractor agrees to protect, defend, indemnify, save, and hold harmless, the State of Louisiana, all State Departments, Agencies, Boards and Commissions, its officers, agents, servants, employees and volunteers, from and against any and all claims, damages, expenses and liability arising out of injury or death to any person or the damage, loss or destruction of any property which may occur, or in any way grow out of, any act or omission of Contractor, its agents, servants and employees, or any and all costs, expenses and/or attorney fees incurred by Contractor as a result of any claims, demands, suits or causes of action, except those claims, demands, suits or causes of action arising out of the negligence of the State of Louisiana, all State Departments, Agencies, Boards, Commissions, its officers, agents, servants, employees and volunteers.

Contractor agrees to investigate, handle, respond to, provide defense for and defend any such claims, demands, suits or causes of action at its sole expense and agrees to bear all other costs and expenses related thereto, even if the claims, demands, suits, or causes of action are groundless, false or fraudulent. The State of Louisiana may, but is not required to, consult with the Contractor in the defense of claims, but this shall not affect the Contractor's responsibility for the handling and expenses of all claims.

11.4 PERFORMANCE AND PAYMENT BOND

11.4.1 The Owner shall have the right to require the Contractor to furnish bonds covering faithful performance of the Contract and payment of obligations arising thereunder as stipulated in bidding requirements or specifically required in the Contract Documents on the date of execution of the Contract.

11.4.2 Upon the request of any person or entity appearing to be a potential beneficiary of bonds covering payment of obligations arising under the Contract, the Contractor shall promptly furnish a copy of the bonds or shall authorize a copy to be furnished.

11.4.3 Recordation of Contract and Bond [La R.S. 38:2241 thru 38:2241.1]

The *Owner shall require the Contractor to record* within thirty (30) days the Contract Between Owner and Contractor and Performance and Payment Bond with the Clerk of Court in the Parish in which the Work is to be performed.

ARTICLE 12

UNCOVERING AND CORRECTION OF WORK

12.2 CORRECTION OF WORK

12.2.1 Before Substantial Completion

At the end of the paragraph, add the following sentences:
"If the Contractor fails to correct Work identified as defective within a thirty (30) day period, through no fault of the Designer, the Owner may hold the Contractor in default. If the Owner finds the Contractor in default, the Surety shall be notified. If within thirty (30) days after notification, the Surety has not corrected the nonconforming Work, through no fault of the Architect or Owner, the Owner may contract to have nonconforming Work corrected and hold the Surety and Contractor responsible for the cost, including architectural fees and other indirect costs. If the Surety fails to correct the Work within the stipulated time period and fails to meet its obligation to pay the costs, the Owner may elect not to accept bonds submitted in the future by the Surety. Finding the Contractor in default shall constitute a reason for disqualification of the Contractor from bidding on future state contracts.

12.2.2 After Substantial Completion

12.2.2.1 At the end of the paragraph delete the last sentence and add the following sentences:
"If the Contractor fails to correct nonconforming Work, or Work covered by warranties, within a thirty (30) day period, through no fault of the Architect or Owner, the Owner may hold the Contractor in default. If the Owner finds the Contractor is in default, the Surety shall be notified. If within thirty (30) days after notification, the Surety has not corrected the non-conforming or warranty Work, through no fault of the Architect or Owner, the Owner may contract to have the nonconforming or warranty Work corrected and hold the Surety responsible for the cost including architects fees and other indirect costs. Corrections by the Owner shall be in accordance with Section 2.4. If the Surety fails to correct the nonconforming or warranty Work within the stipulated time period and fails to meet its obligation to pay the costs, the Owner may not accept bonds submitted, in the future, by the Surety."

ARTICLE 13

MISCELLANEOUS PROVISIONS

13.1 GOVERNING LAW

Delete all after the word "located".

13.2 SUCCESSORS AND ASSIGNS

13.2.1 In the second sentence, delete "Except as … 13.2.2"

Delete Section 13.2.2.

13.3 RIGHTS AND REMEDIES

Add the following Section 13.3.3:

13.3.3 The Nineteenth Judicial Court in and for the Parish of East Baton Rouge, State of Louisiana shall have sole jurisdiction and venue in any action brought under this contract.

13.4 TESTS AND INSPECTIONS

In Section 13.4.1, delete the second sentence and substitute the following:

The Contractor shall make arrangements for such tests, inspections and approvals with the Testing Laboratory provided by the Owner, and the Owner shall bear all related costs of tests, inspections and approvals.

Delete the last two sentences of Section 13.4.1.

13.5 INTEREST

Delete Section 13.5.

ARTICLE 14

TERMINATION OR SUSPENSION OF THE CONTRACT

14.1 TERMINATION BY THE CONTRACTOR

Delete Section 14.1.1.4.

In Section 14.1.3, after the word "profit," delete the words "on Work not executed" and substitute the following: "for Work completed prior to stoppage".

14.2 TERMINATION BY THE OWNER FOR CAUSE

Add the following Section:

14.2.1.5 failure to complete the punch list within the lien period as provided in 9.8.7.

14.2.3 Add the following sentence:

"Termination by the Owner shall not suspend assessment of liquidated damages against the Surety."

Add the following Section:

14.2.5 If an agreed sum of liquidated damages has been established, termination by the Owner under this Article shall not relieve the Contractor and/or Surety of his obligations under the liquidated damages provisions and the Contractor and/or Surety shall be liable to the Owner for per diem liquidated damages.

14.4 TERMINATION BY THE OWNER FOR CONVENIENCE

In Section 14.4.3, delete all after "incurred by reason of the termination," and add "along with reasonable profit on the Work not executed."

ARTICLE 15

CLAIMS AND DISPUTES

15.1 CLAIMS

Delete Section 15.1.2, **Time Limit on Claims,** (See La R.S. 38:2189, and 38:2189.1).

15.1.3.1 Add the following to the end of the paragraph:
"A Reservation of Rights and similar stipulations shall not be recognized under this contract as having any effect. A party must make a claim as defined herein within the time limits provided."

15.1.4.2 In the first sentence of the Section, delete "Initial Decision Maker's" and replace with "Architect's". In the second sentence of the Section, delete "the decision of the Initial Decision Maker" and replace with: "his/her decision".

Delete Section 15.1.6.2 and substitute the following:

15.1.6.2 If adverse weather conditions are the basis for a claim for additional time, the Contractor shall document that weather conditions had an adverse effect on the scheduled construction. An increase in the contract time due to weather shall not be cause for an increase in the contract sum. At the end of each month, the Contractor shall make one Claim for any adverse weather days occurring within the month. The Claim must be accompanied by sufficient documentation evidencing the adverse days and the impact on construction. Failure to make such Claim within **twenty-one (21) days** from the last day of the month shall prohibit any future claims for adverse days for that month. No additional adverse weather days shall be granted after the original or extended contract completion date, except those adverse weather days associated with a National Weather Service named storm or federally declared weather related disaster directly affecting the Project site.

Add the following Section:

15.1.6.3 The following are considered reasonably anticipated days of adverse weather on a monthly basis:

January	11 days	July	6 days
February	10 days	August	5 days
March	8 days	September	4 days
April	7 days	October	3 days
May	5 days	November	5 days
June	6 days	December	8 days

The Contractor shall ask for total adverse weather days. The Contractor's request shall be considered only for days over the allowable number of days stated above.

Note:Contract is on a calendar day basis.

15.2 INITIAL DECISION

15.2.1 In the second sentence, delete the word "will" and replace with: "shall always".

In the second sentence, delete the phrase: ", unless otherwise indicated in the Agreement."

In the third sentence, delete the word "mediation" and replace with: "litigation".

At the end of the third sentence, add: "arising prior to the date final payment is due".

Delete the fourth sentence.

15.2.5 In the middle of the first sentence, delete all after the phrase: "rejecting the Claim".

In the second sentence, delete the phrase: "and the Architect, if the Architect is not serving as the Initial Decision Maker,".

In the third sentence, delete all after: "binding on the parties" and add the following: "except that the Owner may reject the decision or suggest a compromise or both".

Delete Section 15.2.6.

Delete Section 15.2.6.1.

15.3 MEDIATION

Delete Section 15.3.

15.4 ARBITRATION

Delete Section 15.4.

END OF SECTION

INSURANCE REQUIREMENTS *Revised February 2019*

(for contractors doing business with the University of Louisiana at Lafayette)

I. Purpose and Scope

The purpose of this document is to ensure that third parties doing business with the University are adequately insured for the risk and liability associated with the goods, services, and/or work they provide to the University. This document sets forth the insurance language to be included in the bid and/or contract specifications when hiring contractors, vendors, or service providers to provide goods, perform services, and/or perform work for the University ("Contractors"). This document also sets forth the insurance language that should be included in all University contracts with Contractors ("Contracts"). This document applies to all Contracts to which the University is a party, including the individual departments and units of the University.

II. General Insurance Requirements

Except as expressly provided below with regard to Reduced Limits for Special Circumstances, the following language shall be included in (1) all Contractor bid and contract specifications, and (2) all Contracts. Requests for other variations in this language must be reviewed by the University's Risk Manager, who will make the final decision as to the language to be used. Please note that hazardous, unusual or exceptional activities, or a change in Contract indemnification provisions, may necessitate additional insurance; questions regarding the need for other coverage should be directed to the University's Risk Manager.

Contractor shall purchase, at its own cost and expense, and maintain for the duration of the Contract, insurance against claims for injuries to persons or damages to property which may arise from or in connection with the performance of the work hereunder by Contractor, its agents, representatives, employees, or subcontractors. The insurance shall be obtained from a company or companies lawfully authorized to do business in the State of Louisiana with a A.M. Best's rating of A-:VI or higher. Failure to comply with all terms of this section for the duration of the Contract places Contractor in breach of this Contract. Requests for any variation in this language will be reviewed by University's Risk Manager, who will make the final decision.

A. Minimum Scope of Insurance and Limits

1. Workers Compensation

Contractor shall be in compliance at all times with the Louisiana Workers' Compensation Law with respect to workers' compensation insurance or proper certification of self-insured status.

2. Commercial General Liability

Contractor shall maintain Commercial General Liability insurance, including Personal and Advertising Injury Liability, which coverage shall have a minimum limit per occurrence of $1,000,000 and a minimum general aggregate of $2,000,000. The Insurance Services Office (ISO) Commercial General Liability occurrence coverage form CG 00 01 (current form approved for use in Louisiana), or equivalent, is to be used in the policy. Claims-made form is unacceptable.

Additionally, if alcohol is served in the execution of this Contract, then Contractor shall maintain Liquor Liability coverage in the minimum amount of $1,000,000 per occurrence.

Additionally, if valet parking is performed in the execution of this Contract, then Contractor shall maintain Garage Keepers Liability coverage in the minimum amount of $1,000,000 per occurrence.

3. Automobile Liability (if a Motor Vehicle owned, hired, or rented by the contractor is used in the performance of this Contract)

Contractor shall maintain Automobile Liability Insurance, which coverage shall have a minimum combined

single limit per occurrence of $1,000,000. ISO form number CA 00 01 (current form approved for use in Louisiana), or equivalent, is to be used in the policy. This insurance shall include third-party bodily injury and property damage liability for owned, hired, and non-owned automobiles.

B. Other Insurance Provisions

Contractor shall either (i) require each subcontractor and vendor to procure and maintain all applicable insurance of the type and limits specified in this section, or (ii) include all subcontractors as insureds under its policies.

Any deductibles or self-insured retentions must be declared to and accepted by University. Contractor shall be responsible for all deductibles and self-insured retentions. Any insurance or self-insurance maintained by University shall be excess and non-contributory of Contractor's insurance. Contractor's coverage shall contain no special limitations on the scope of protection afforded to University. Contractor's insurance shall be primary as respects University, The Board of Supervisors for the University of Louisiana System ("Board"), and all of their respective officers, agents, employees, and volunteers.

Except for workers' compensation coverage, University and Board, and all of their respective officers, agents, employees, and volunteers, shall be named as an additional insured as regards negligence by Contractor. ISO Form CG 20 10 (current form approved for use in Louisiana), or equivalent, is to be used when applicable.

Contractor shall provide to University Certificates of Insurance ("Certificates") evidencing the foregoing coverage in advance of Contractor's delivery of goods and/or performance of work or services, and in all events, prior to any payment by University to Contractor. In addition to Certificates, Contractor shall submit to University the declarations page and the cancellation provisions for each insurance policy. University reserves the right to request complete certified copies of all required insurance policies at any time.

Certificates and all notices regarding coverage shall be addressed to:

University of Louisiana at Lafayette
ATTN: Purchasing Department
P.O. Box 40197
Lafayette, LA 70504

Certificates of Insurance shall reflect that, to the fullest extent allowed by law, the insurer shall agree to waive all rights of subrogation against University, its officers, agents, employees, and volunteers for losses arising from work performed by the Contractor for University.

Coverage shall not be canceled, suspended, reduced, or voided by either Contractor or the insurer except after 30 days written notice has been given to University. Ten-day written notice of cancellation is acceptable for non-payment of premium. Notifications shall comply with the standard cancellation provisions in Contractor's policy.

Acceptance of goods or completed work by University, payment by University, failure of University to require proof of compliance, or University's acceptance of a non-compliant Certificate shall not release Contractor from its obligations under these insurance requirements. Failure of Contractor to purchase and/or maintain any required insurance shall not relieve Contractor from any liability or indemnification under the Contract.

III. <u>Additional Insurance Requirements for Special Contracts</u>

In addition to the foregoing insurance requirements, language specifying the following insurance requirements shall be included in: (1.) all bid and contract specifications for professional services and (2.) all Contracts for professional services, where applicable:

A. Professional Liability, Errors and Omissions, and Malpractice Insurance

If any of the following professionals provide services in the execution of the Contract, Contractor shall purchase and maintain Professional Liability Insurance, which coverage shall have minimum limits of $1,000,000:

- Medical Professionals, such as physicians, nurses, dentists, and pharmacists;
- Architects and Engineers;
- Attorneys;
- Accountants and Professional Financial Advisors;
- Real Estate Brokers and Appraisers;
- Insurance Agents; and
- Consultants.

Claims-made coverage for Professional Liability Insurance is acceptable. The date of the inception of the policy must be no later than the first date of the anticipated work under this Contract. It shall provide coverage for the duration of this Contract and shall have an expiration date no earlier than 30 days after the anticipated completion of the Contract. The policy shall provide an extended reporting period of at least 24 months, with full reinstatement of limits, from the expiration date of the policy, if policy is not renewed.

B. Cyber Liability Insurance

For Contracts in which the Contractor shall be granted access to electronic data belonging to the University or others, including but not limited to corporate confidential information (CCI), personal financial information (PII), personal health information (PHI), payment card information (PCI), and all personal student information (PSI) stored in electronic format, and for which there is a risk of electronic security breaches of this confidential data, including inadvertent release, hacking, viruses, improper destruction, etc., Cyber liability insurance, including first-party costs, shall be required with a minimum limit per occurrence of $1,000,000. Claims-made coverage is acceptable. The date of the inception of the policy must be no later than the first date of the anticipated work under this Contract. It shall provide coverage for the duration of this Contract and shall have an expiration date no earlier than 30 days after the anticipated completion of the Contract. The policy shall provide an extended reporting period of not less than 36 months from the expiration date of the policy, if the policy is not renewed. The policy shall not be cancelled for any reason, except non-payment of premium.

IV. Reduced Limits for Special Circumstances

The scope of work for a bid or Contract may dictate that a reduction of insurance limits is necessary in order to facilitate competition and/or ensure the University's ability to hire qualified Contractors. Low risk activities which may justify a reduction in insurance limits include, but are not limited to:

- Services in which the owner/operator is the only Contractor employee;
- Services that do not involve the use of a motor vehicle;
- Services in which there is no use of hazardous or radioactive materials;
- Services in which there is no use of power machinery or tools;
- Services in which there is no use of high voltage equipment; and
- Services in which no work is actually performed on the University campus.

For these special circumstances, University's Director of Purchasing, at his/her discretion, may choose to reduce the insurance required of Contractor. If insurance requirements are so reduced, the reduction(s) must comply with the following guidelines:

A. Workers Compensation

University may waive workers' compensation insurance requirements for sole proprietors if they are the only person(s) employed by Contractor in performing the work or services specified in the Contract.

If coverage is so waived, the Contract must include language that Contractor agrees that such persons will have no cause of action against, and will not assert a claim against, University, the Board, and/or the State of Louisiana, whether pursuant to the workers' compensation law of Louisiana or any other state, or other similar state or federal law, under any circumstance. The Contract must also include language that the parties agree that University, the Board, and the State of Louisiana, and all of their agents and employees, shall in no circumstance be, or considered as, the employer or statutory employer of Contractor, its owners, agents, or employees. The Contract must further include language that the parties agree that Contractor is a wholly independent contractor and is exclusively responsible for its own employees, owners, and agents, and that Contractor agrees to protect, defend, indemnify and hold University, the Board, and the State of Louisiana, and all of their agents and employees, harmless from any assertion or claim that may arise from the performance of this Contract.

B. Commercial General Liability

Commercial General Liability insurance, including Personal and Advertising Injury Liability, may be reduced to a minimum limit per occurrence of $100,000. The Insurance Services Office (ISO) Commercial General Liability occurrence coverage form CG 00 01 (current form approved for use in Louisiana), or equivalent, is to be used in the policy. Claims-made form is unacceptable.

C. Automobile Liability

Automobile Liability Insurance requirements may be waived *only if* the scope of work does not involve the use of a motor vehicle. Examples include but are not limited to:

1. Goods and/or services that will be delivered to University by a third party (not Contractor); and
2. Goods and/or services that will be delivered to University electronically.

D. Required Insurance Language

Notwithstanding any reduction or waiver made pursuant to this section, all bid/contract specifications and all Contracts must include the language set forth in the General Insurance Requirements section, above, subject to modification only for the specific reduction or waiver made.

END OF SECTION

GENERAL REQUIREMENTS

The Contractor shall furnish and install all labor and material necessary to provide and install the complete portion of this contract, including all materials and equipment as shown on the plans. It is the intention of these specifications that all systems be furnished complete with whatever necessary items are required to produce a satisfactory installation in a working order. The Contractor shall be responsible for bringing to the attention of the Owner any shortcomings of the design, or thereby, shall be responsible in full to meet the conditions set forth, that being, the system is to be in a satisfactory working order.

All material shall be installed in accordance with the instructions of the manufacturers. The work shall be done in strict compliance with state and local ordinances governing this class of work. The prospective bidder shall visit the job site and become familiar with all existing conditions found at the site. The Contractor shall become acquainted with all existing factors and conditions which affect the work. Failure to do so shall not relieve meeting the responsibility to install the work correctly.

The Contractor shall protect the entire installation from injury on the Project until final acceptance. Failure to do so shall be sufficient cause for the Agent to reject any work.

CONSTRUCTION FORCE

The Contractor shall provide and maintain in full operation at all times during the performance of the contract a sufficient work crew to execute the work with dispatch. The Contractor shall provide a full time superintendent who shall be on the job during all working periods.

The Contractor shall be responsible for maintenance and repair of all equipment installed by him which fails due to substandard workmanship.

PARKING

Contractor shall be responsible for all fees for temporary campus parking permits. The Facility Management department shall request the permits through the UL Parking and Transit department. Contractor shall be required to display the permit on their vehicles at all times while on campus. Failure to do so may result in parking citation.

DEQ NOTIFICATION

The Contractor shall be responsible for the proper notification of the Department of Environmental Quality whenever demolition work is to be performed. Copies of the DEQ Notification Form AAC-2 and any additional correspondence with DEQ shall be copied to the University.

STANDARDS

All materials furnished under this contract shall be designed, constructed and rated in accordance with the latest applicable standards, and shall pass tests as recommended therein.

WORKMANSHIP AND MATERIALS

The workmanship shall conform to the best accepted construction practice. Should it become evident that during the course of construction that the items indicated on the plans, are for any reason undesirable, the Contractor shall immediately bring the situation to the attention of the Agent for a decision. The Contractor shall be responsible for installing the proper materials as described by the drawings and specifications.
All materials furnished for this Project shall be new, undamaged, and bear the label of the Underwriters' Laboratories, Inc. Deliver materials in manufacturer’s original package and store on skids so that the materials are off the ground, and so that product labels are exposed for easy inspection.

The Bidder shall base the proposal on materials herein specified. Reference to specific manufacturers or trade names is not intended to limit or indicate preference to specific manufacturers, but to indicate a standard of quality. Written approval from the Agent is required on all substitutions prior to installations.

GUARANTEE

The Contractor shall guarantee new materials and workmanship for a minimum of one (1) full year after formal acceptance of the Project. The Contractor will replace defective material and repair all workmanship defects promptly, and absorb all costs.

This provision shall not override any other warranties that are specified herein.

CAMPUS SAFETY POLICY

Contractor shall adhere to the campus safety policy. Information regarding campus safety can be found on the UL Lafayette website at: http://www.louisiana.edu/ehs

LOUISIANA ONE CALL

UL Lafayette is a member in the Louisiana One Call system. At least 72 hours before digging anywhere on UL Lafayette property the contractor **must** call 1-800-272-3020 to verify the location of utilities.

EXISTING LANDSCAPING

Contractor is liable for any damages caused to the existing landscaping. All landscaping must be protected from root compaction and other physical damage. Contractor **must** provide three foot high orange construction fencing around the drip line of all trees within the construction site.

ASBESTOS

The contractor **will not** be required to interface with any asbestos containing material (ACM) during this Project. The State of Louisiana has conducted an asbestos survey of all buildings on the UL Lafayette campus. The results of the survey are compiled in management plans for each building. The management plans were assembled according to the requirements set forth in the Department of Environmental Quality Required Elements Index. These plans are available for review to anyone interested in the results. The plans are kept on file in the Reserve Reading Room of Edith Garland Dupre' Library.

COORDINATION OF WORK

The Contractor shall inform the Agent each day of his work location before proceeding to work, and each time the Contractor moves into a different area.

STORM WATER RUN OFF PROTECTION

Contractor shall protect the entire construction site from erosion due to storm water run-off. A retention barrier shall be constructed around the entire construction site perimeter to prevent erosion from infiltrating the storm water drainage system.

PAYMENT

The Contractor may invoice the Owner for work performed on a monthly basis. The work performed shall meet the approval of UL Lafayette. UL Lafayette shall process payment after verification of the invoice.

On Projects where a performance bond is specified, the University will withhold ten percent (10%) retainage from all payments for completed work. The retainage will be released to the contractor according to the procedures set forth in the “INSTRUCTIONS TO BIDDERS AND GENERAL CONDITIONS”, section 10.

FINAL PAYMENT WILL NOT BE ISSUED UNTIL ALL UNIVERSITY KEYS HAVE BEEN RETURNED TO THE FACILITY MANAGEMENT OFFICE.

CLEAN-UP

The Contractor is responsible for the daily clean-up and disposal of all trash and construction debris relating to this Project. University dumpsters shall **not** be used for the disposal of debris. Should the Contractor dispose of any debris into University facilities, the cost of removal will be deducted from the University's final payment under this contract. Occupied areas (e.g.: Classrooms, Offices, Labs, etc.) shall be broom cleaned and vacuumed at the end of the work day to allow use of the room by the University. Debris and materials shall be removed from the rooms to allow use of the room by the University.

INDEMNIFICATION

The Contractor will indemnify and hold harmless the Owner and all of their agents and employees from and against all claims, damages, losses, and expenses including attorney's fees arising out of or resulting from operations under the Contract Documents by the Contractor, and subcontractor, anyone directly or indirectly employed by any of them, or anyone for whose acts any of them may be liable, which are caused in whole or in part by any error, omission, or act of any of them. If any and all claims against the Owner or any of their agents or employees by any employee of the Contractor, subcontractor, anyone directly or indirectly employed by any of them, or anyone for whose acts any of them may be liable, the indemnification obligation of the Contractor under this article shall not be limited in any way by any limitation on the amount or type of damages, compensation or benefits payable by or for the Contractor or any subcontractor under Workmen's Compensation laws.

END OF SECTION

LOUISIANA UNIFORM PUBLIC WORK BID FORM

TO: University of Louisiana at Lafayette
Purchasing Office, Martin Hall Room 123
104 University Circle
PO Box 40197
Lafayette, LA 70504

BID FOR: CROSSWALK CONSTRUCTION – HEBRARD BLVD.

File No. 20222

The undersigned bidder hereby declares and represents that she/he: a) has carefully examined and understands the Bidding Documents, b) has not received, relied on, or based his bid on any verbal instructions contrary to the Bidding Documents or any addenda, c) has personally inspected and is familiar with the Project site, and hereby proposes to provide all labor, materials, tools, appliances and facilities as required to perform, in a workmanlike manner, all work and services for the construction and completion of the referenced Project, all in strict accordance with the Bidding Documents prepared by:

University of Louisiana at Lafayette and dated: May 2020 .
(Owner to provide name of entity preparing bidding documents.)

Bidder must acknowledge all addenda. The Bidder acknowledges receipt of the following ADDENDA: (Enter the number the Designer has assigned to each of the addenda that the Bidder is acknowledging) _____

TOTAL BASE BID: For all work required by the Bidding Documents (including any and all unit prices designated "Base Bid"* but not alternates) the sum of:

_____Dollars ($_____)

ALTERNATES: For any and all work required by the Bidding Documents for Alternates including any and all unit prices designated as alternates in the unit price description.

Alternate No. 1 ***(Owner to provide description of alternate and state whether add or deduct)*** **for the lump sum of:**
_____N/A_____Dollars ($_____)

Alternate No. 2 ***(Owner to provide description of alternate and state whether add or deduct)*** **for the lump sum of:**
_____N/A_____Dollars ($_____)

Alternate No. 3 ***(Owner to provide description of alternate and state whether add or deduct)*** **for the lump sum of:**
_____N/A_____Dollars ($_____)

NAME OF BIDDER: _____

ADDRESS OF BIDDER: _____

_____

LOUISIANA CONTRACTOR'S LICENSE NUMBER: _____

NAME OF AUTHORIZED SIGNATORY OF BIDDER: _____

TITLE OF AUTHORIZED SIGNATORY OF BIDDER: _____

SIGNATURE OF AUTHORIZED SIGNATORY OF BIDDER: _____**

DATE: _____

***** The **Unit Price Form** shall be used if the contract includes unit prices. Otherwise, it is not required and need not be included with the form. The number of unit prices that may be included is not limited and additional sheets may be included if needed.

****** A **CORPORATE RESOLUTION OR WRITTEN EVIDENCE** of the authority of the person signing the bid for the public work as prescribed by LA R.S. 38:2212(B)(5).
BID SECURITY in the form of a bid bond, certified check or cashier's check as prescribed by LA RS 38:2218(A) attached to and made a part of this bid.

NOTE: Affidavit submitted with the Bid Documents, prior to the opening of bids, will not be accepted in accordance with LA. R.S. 38:2212.10.

_____ _____

Name of Project **Project No.**

STATE OF _____

PARISH OF _____

ATTESTATIONS AFFIDAVIT

Before me, the undersigned notary public, duly commissioned and qualified in and for the parish and state aforesaid, personally came and appeared Affiant, who after being duly sworn, attested as follows:

LA. R.S. 38:2227 PAST CRIMINAL CONVICTIONS OF BIDDERS

A. No sole proprietor or individual partner, incorporator, director, manager, officer, organizer, or member who has a minimum of a ten percent (10%) ownership in the bidding entity named below has been convicted of, or has entered a plea of guilty or nolo contendere to any of the following state crimes or equivalent federal crimes:

(a) Public bribery (R.S. 14:118)
(b) Corrupt influencing (R.S. 14:120)
(c) Extortion (R.S. 14:66)
(d) Money laundering (R.S. 14:23)

B. Within the past five years from the Project bid date, no sole proprietor or individual partner, incorporator, director, manager, officer, organizer, or member who has a minimum of a ten percent (10%) ownership in the bidding entity named below has been convicted of, or has entered a plea of guilty or nolo contendere to any of the following state crimes or equivalent federal crimes, during the solicitation or execution of a contract or bid awarded pursuant to the provisions of Chapter 10 of Title 38 of the Louisiana Revised Statutes:

(a) Theft (R.S. 14:67)
(b) Identity Theft (R.S. 14:67.16)
(c) Theft of a business record (R.S.14:67.20)
(d) False accounting (R.S. 14:70)
(e) Issuing worthless checks (R.S. 14:71)
(f) Bank fraud (R.S. 14:71.1)
(g) Forgery (R.S. 14:72)
(h) Contractors; misapplication of payments (R.S. 14:202)
(i) Malfeasance in office (R.S. 14:134)

LA. R.S. 38:2212.10 Verification of Employees

A. At the time of bidding, Appearer is registered and participates in a status verification system to verify that all new hires in the state of Louisiana are legal citizens of the United States or are legal aliens.

B. If awarded the contract, Appearer shall continue, during the term of the contract, to utilize a status verification system to verify the legal status of all new employees in the state of Louisiana.

C. If awarded the contract, Appearer shall require all subcontractors to submit to it a sworn affidavit verifying compliance with Paragraphs (A) and (B) of this Subsection.

_____ _____

Name of Project **Project No.**

LA. R.S. 23:1726(B) Certification Regarding Unpaid Workers Compensation Insurance

A. R.S. 23:1726 prohibits any entity against whom an assessment under Part X of Chapter 11 of Title 23 of the Louisiana Revised Statutes of 1950 (Alternative Collection Procedures & Assessments) is in effect, and whose right to appeal that assessment is exhausted, from submitting a bid or proposal for or obtaining any contract pursuant to Chapter 10 of Title 38 of the Louisiana Revised Statutes of 1950 and Chapters 16 and 17 of Title 39 of the Louisiana Revised Statutes of 1950.

B. By signing this bid /proposal, Affiant certifies that no such assessment is in effect against the bidding / proposing entity.

_____	_____
NAME OF BIDDER	**NAME OF AUTHORIZED SIGNATORY OF BIDDERE**
_____	_____
DATE	**TITLE OF AUTHORIZED SIGNATORY OF BIDDER**

_____

SIGNATURE OF AUTHORIZED
SIGNATORY OF BIDDER/AFFIANT

Sworn to and subscribed before me by Affiant on the _____ day of _____ , 20___ .

_____
Notary Public

STATE OF _____

[ ] PARISH OF _____ [ ] COUNTY OF _____

AFFIDAVIT ATTESTING THAT PUBLIC CONTRACT WAS NOT, NOR WILL NOT BE SECURED THROUGH EMPLOYMENT OR PAYMENT OF SOLICITOR

KNOW ALL MEN BY THESE PRESENCE, that a public contract is contemplated between

University of Louisiana at Lafayette and
_____,

represented by (print or type) _____ attests that s/he
is empowered and authorized to execute said documents.

FURTHER, (signature) _____, who being duly sworn, does depose and attest that:

1) **Affiant employed no person, corporation, firm, association, or other organization, either directly or indirectly, to secure the public contract under which he received payment, other than persons regularly employed by the affiant whose services in connection with the construction, alteration or demolition of the public building or Project or in securing the public contract wherein the regular course of their duties for affiant; and**

2) **That no part of the contract price received by affiant was paid or will be paid to any person, Corporation, firm, association, or other organization for soliciting the contract, other than the payment of their normal compensation to persons regularly employed by the affiant whose services in connection with the construction, alteration or demolition of the public building or Project were in the regular course of their duties for affiant.**

BEFORE ME, the representing authority, personally appeared, who being duly sworn, deposes and states that the above is true and correct in all respects recited.

SWORN TO AND SUBSCRIBED before me, this _____ day of _____, 20_____.

_____
Notary Public

UL Lafayette

Hebrard Blvd Renovation

Lafayette, La.

Graphic Symbols

SPECIFICATION SECTION / 07 92 00.A1 / KEYNOTE REFERENCE	ARCHITECTURAL KEYNOTE
SPECIFICATION SECTION / 4A5.1 / SHEET NUMBER	TYPICAL REFERENCE NUMBER
SIM 1 A101	SECTION OR DETAIL REFERENCE
SIM 1 A101	DETAIL REFERENCE
101	DOOR MARK AND NUMBER
1t	WINDOW MARK AND NUMBER
1i	PARTITION REFERENCE
	EXISTING SPOT ELEVATION
	NEW SPOT ELEVATION
SIM 1 A101	INTERIOR ELEVATION
1 A101	EXTERIOR ELEVATION

Project Directory

PROJECT ADDRESS

UNIVERSITY OF LOUISIANA AT LAFAYETTE
CORNER OF BOUCHER DRIVE AND HEBRARD
LAFAYETTE, LOUISIANA 70503
PHONE (337)-482-1000

OWNER

UNIVERSITY OF LOUISIANA AT LAFAYETTE
104 E UNIVERSITY CIRCLE
LAFAYETTE, LA 70503

PROJECT CONTACT PERSON(S)

SCOTT HEBERT
DIRECTOR OF FACILITY PLANNING & CONSTRUCTION
OFFICE (337) 482-5833
CELL (337) 247-4945

ARCHITECT:

ARCHITECTS SOUTHWEST
534 JEFFERSON STREET
LAFAYETTE, LA 70501
PH: (337)-237-2211
FAX: (337)-237-2213
CONTACT: GREG DAMICO

MECHANICAL AND ELECTRICAL ENGINEER

M&E CONSULTING, INC.
1304 BERTRAND DRIVE, SUITE F7
LAFAYETTE, LA 70506
PHONE: 337-234-7474
CONTACT: DAVID CARROLL

CIVIL ENGINEER

RONKARTZ-OESTIECHER
1919B DULLES DRIVE
LAFAYETTE, LA 70506
PHONE: 337-991-9290
CONTACT: CLIFF OESTRIECHER

Vicinity Map

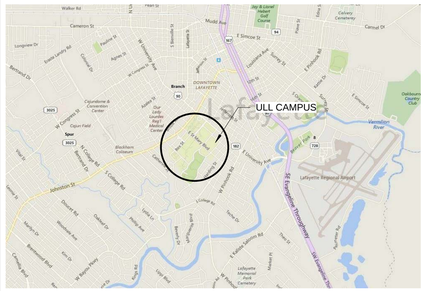

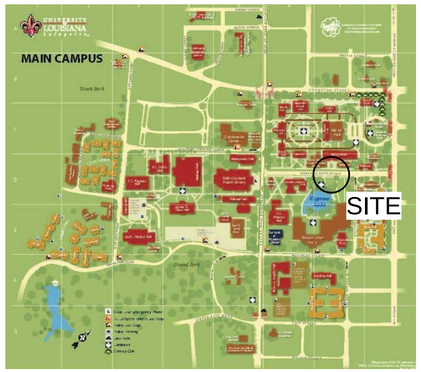

Index to Drawings

Title	
AH0.1	*Title Sheet*
Civil	
C1.1H	*Grading and Drainage*
C2.1H	*CB-01*
C2.2H	*MH-06*
C2.3H	*CP-01*
Architectural	
DH0.1	*Demo Plan*
Architectural	
AH1.1	*Site Plan - Overall*
AH1.2	*Site (Enlarged Plan)*
AH4.1	*Site Details*

Project Data

ZONING

CITY OF LAFAYETTE
UNIVERSITY OF LOUISIANA AT LAFAYETTE CAMPUS

APPLICABLE CODES

INTERNATIONAL BUILDING CODE (IBC), 2015 EDITION
STANDARD TYPES OF BUILDING CONSTRUCTION - NFPA 220, LATEST EDITION
NATIONAL ELECTRIC CODE, 2014 EDITION

OCCUPANCY CLASSIFICATION

N/A

ACSW
ABELL+CROZIER + ARCHITECTS SOUTHWEST
PLANNING | ARCHITECTURE | INTERIORS

KEY PLAN

Construction Documents

No.	Description	Date

GREGORY V. DAMICO
NO. 7595
STATE OF LOUISIANA
REGISTERED ARCHITECT

Moody Plaza

Title Sheet

Copyright 2020 ACSW

ASW Project number	18025
Date	04-01-2020
Drawn by	CBB
Checked by	WPD

AH0.1

Scale	1/4" = 1'-0"

3/27/2020 11:09:14 AM

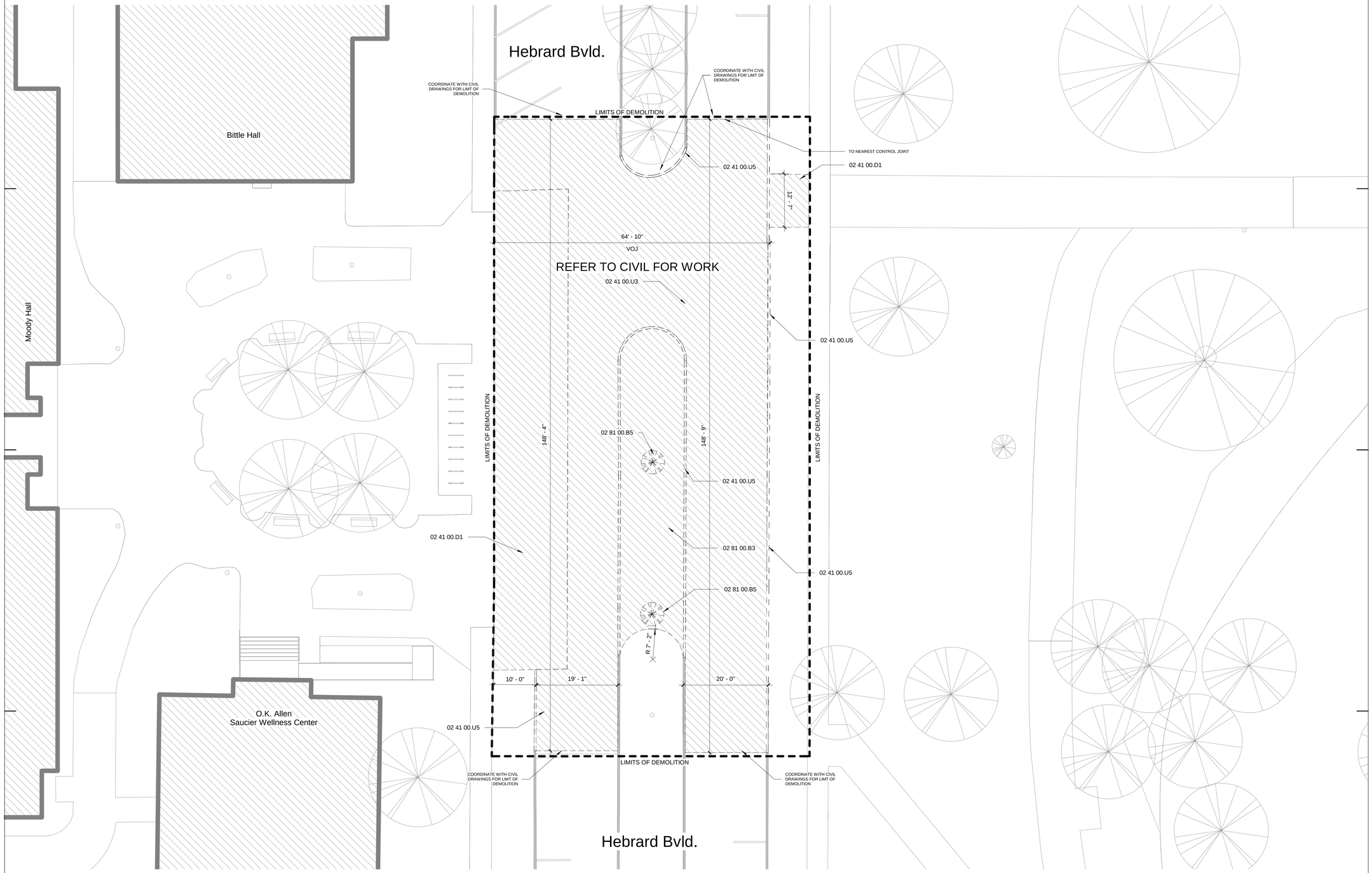

ACSW

ABELL+CROZIER + ARCHITECTS SOUTHWEST

PLANNING | ARCHITECTURE | INTERIORS

KEYNOTE EXPLANATION

02 41 00.D1	REMOVE EXISTING CONCRETE WALK AS REQUIRED TO INSTALL NEW WORK.
02 41 00.U3	REMOVE REMOVE ROAD AND SUBGRADE AS REQUIRED TO INSTALL NEW WORK.
02 41 00.U5	REMOVE CONCRETE CURBING AND ASSOCIATED SUBGRADE AS REQUIRED TO INSTALL NEW WORK.
02 81 00.B3	REMOVE EXISTING GRASS
02 81 00.B5	REMOVE EXISTING TREE

KEY PLAN

Construction Documents

No.	Description	Date

GREGORY V. DAMICO NO. 7595 STATE OF LOUISIANA REGISTERED ARCHITECT

Moody Plaza

Demo Plan

Copyright 2020 ACSW

ASW Project number	18025
Date	04-01-2020
Drawn by	CBB
Checked by	WPD

DH0.1

Scale	3/32" = 1'-0"

3/27/2020 8:44:04 AM

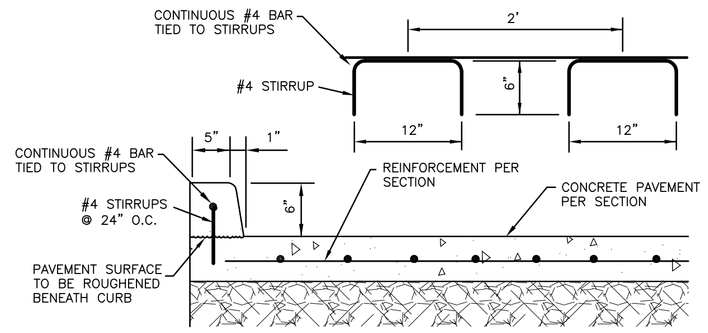

1. JOINTS IN CURB TO MATCH LOCATION AND TYPE OF PAVEMENT
2. REINFORCEMENT SHALL NOT EXTEND THROUGH CURB JOINT

6" PIN-ON BARRIER CURB

SCALE: N.T.S.

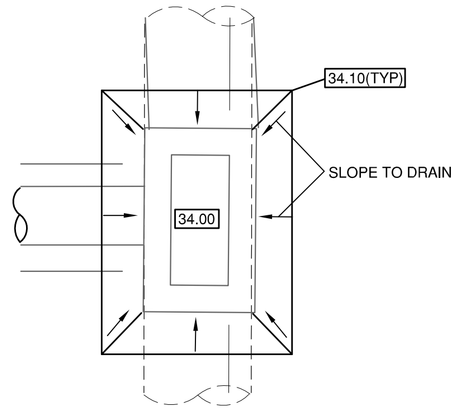

INSET A

SCALE: N.T.S.

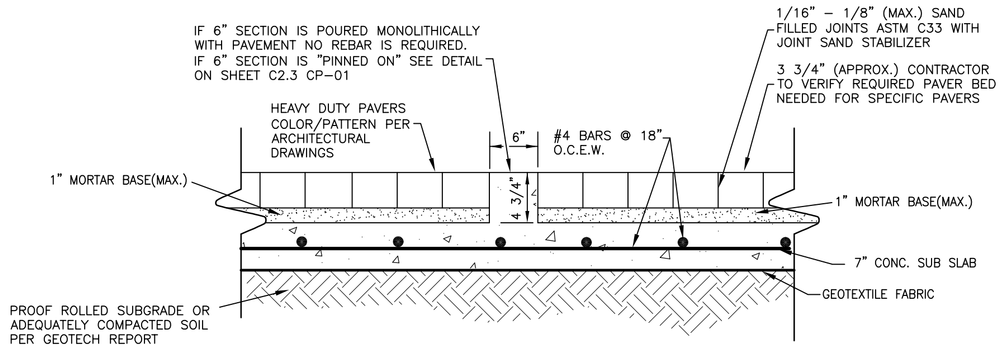

SECTION B-B

SCALE: N.T.S.

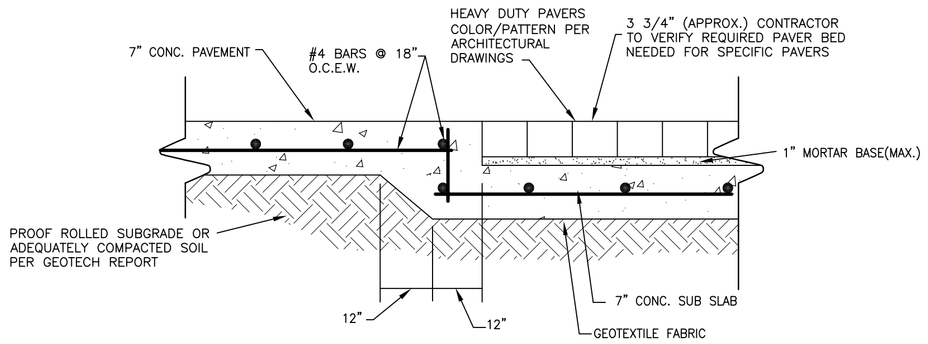

SECTION C-C

SCALE: N.T.S.

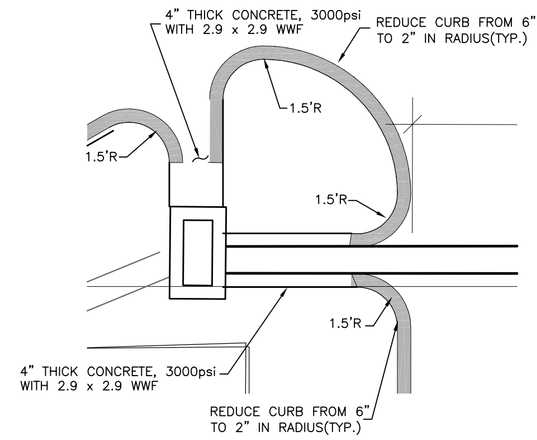

CONCRETE APRON DETAIL

SCALE: N.T.S.

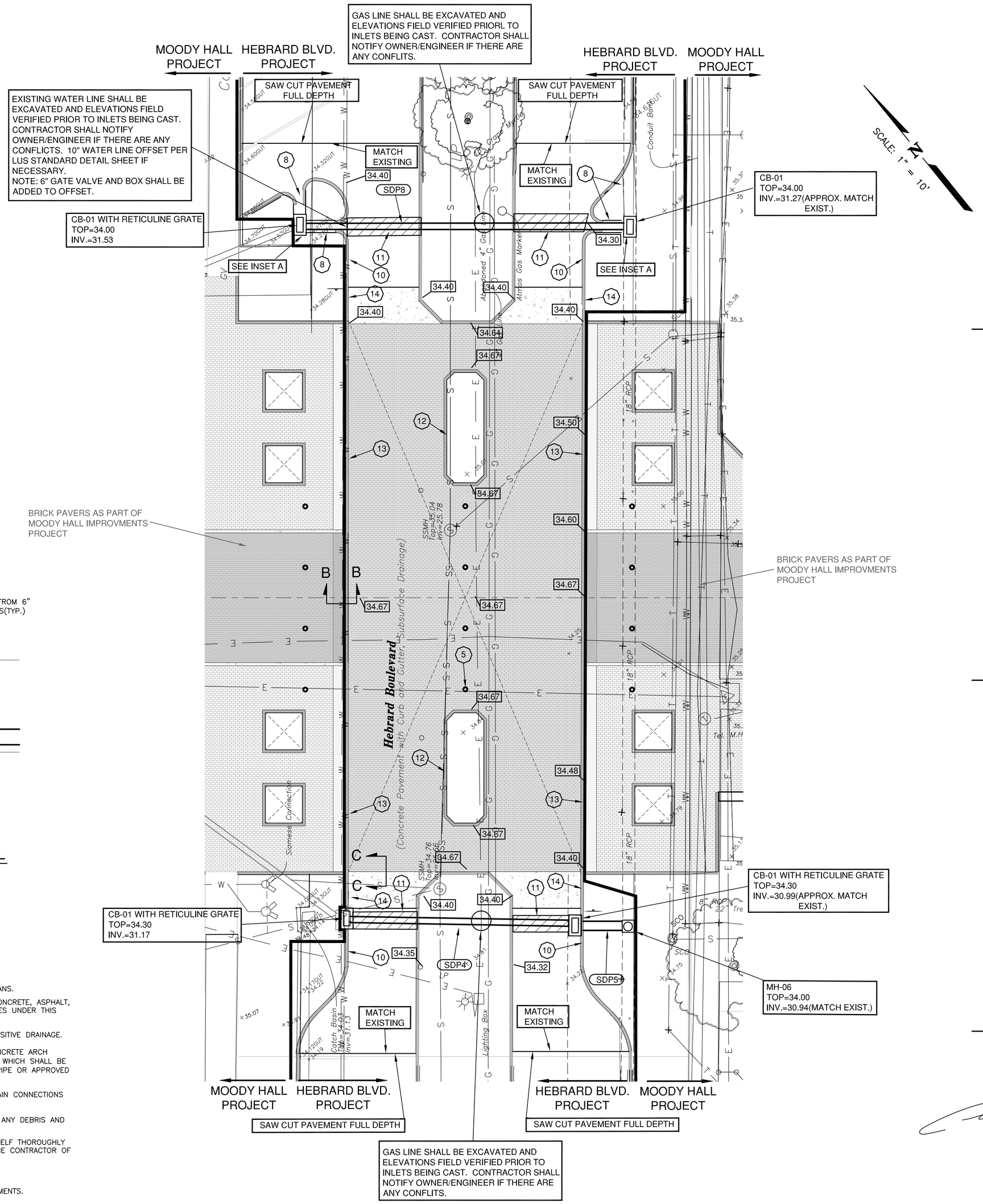

GENERAL NOTES

1. SITE PLAN, PROPOSED BUILDING AND PARKING LAYOUT, SHOWN WAS PROVIDED BY ARCHITECT.
2. REFERENCE ARCHITECTURAL PLANS FOR BUILDING, SITE SIGNAGE, SITE LIGHTING, IRRIGATION AND APPURTENANCES.
3. ALL DIMENSIONS ARE BACK OF CURB TO BACK OF CURB UNLESS OTHERWISE NOTED. REFER TO ARCHITECTURAL DRAWINGS.
4. CONTRACTOR SHALL REFER TO ARCHITECTURAL PLANS FOR EXACT LOCATIONS AND DIMENSIONS OF BUILDING, SIGNAGE, CANOPIES, ...,ETC.
5. LA ONE CALL SHALL BE NOTIFIED AND EXISTING UTILITIES SHALL BE MARKED PRIOR TO WORK BEGINNING. LOCATIONS OF UTILITIES SHOWN ON PLANS ARE ONLY APPROXIMATE AND SHALL BE VERIFIED BY CONTRACTOR PRIOR TO CONSTRUCTION.
6. CONTRACTOR SHALL USE AND MAINTAIN PROPER EROSION CONTROL MEASURES THROUGHOUT THE PROJECT AND FOLLOW STANDARD SWPPP PRACTICES.
7. CONTRACTOR SHALL MAINTAIN PROPER CONSTRUCTION SIGNING IN ACCORDANCE WITH THE MANUAL ON UNIFORM TRAFFIC CONTROL DEVICES (MUTCD-LATEST EDITION) AT ALL TIMES.
8. CONTRACTOR SHALL COORDINATE ALL WORK WITHIN PUBLIC R/W'S OR EASEMENTS WITH CITY OF LAFAYETTE AND ULL(IF NECESSARY).
9. CONTRACTOR SHALL NOTIFY AND OBTAIN APPROVAL FROM CITY OF LAFAYETTE/ULL AT LEAST 48HRS, PRIOR TO ANY LANE CLOSURES. DURING LANE CLOSURES PROPER FLAG MEN AND SIGNAGE SHALL BE UTILIZED AS REQUIRED BY CITY OF LAFAYETTE, ULL AND MUTCD-LATEST EDITION.
10. GENERAL SITE WORK, ALL MATERIALS, INSTALLATION PROCEDURES AND TESTING PROCEDURES SHALL MEET OR EXCEED THE LAFAYETTE CONSOLIDATED GOVERNMENT(LCG) STANDARD SPECIFICATIONS LATEST EDITION. THIS WORK SHALL INCLUDE BUT NOT BE LIMITED TO EARTHWORK, DRAINAGE PIPES AND STRUCTURES, BASE COURSE, PAVEMENT, SIDEWALKS, STRIPING, ..., ETC.
11. SELECT FILL MATERIAL CONFORMING TO THE GEOTECHNICAL REPORT WILL BE REQUIRED TO ACHIEVE THE REQUIRED SITE GRADES.
12. THE CONTRACTOR SHALL BE RESPONSIBLE FOR DETERMINING THE EXACT LOCATION, DEPTH, AND SIZE OF ALL EXISTING UNDERGROUND UTILITIES AND STRUCTURES PRIOR TO EXCAVATION AND SHALL BE LIABLE FOR ANY DAMAGE CAUSED BY FAILURE TO COMPLY WITH THESE INSTRUCTIONS.
13. PROPOSED FINISHED GRADE ELEVATIONS REFERENCE TOP OF PAVEMENT UNLESS OTHERWISE NOTED.
14. ALL UNPAVED AREAS THAT ARE DISTURBED DURING CONSTRUCTION SHALL BE SEEDED AND FERTILIZED PER LCG SPECIFICATIONS.
15. ALL UNPAVED AREAS SHALL BE GRADED FOR POSITIVE DRAINAGE.
16. CONTRACTOR SHALL MAINTAIN PROPER SITE DRAINAGE DURING CONSTRUCTION AS NOT TO NEGATIVELY EFFECT PROJECT OR ADJACENT PROPERTIES.

GENERAL NOTES(CON'T.)

17. ALL SIDEWALKS MUST BE A.D.A. COMPLIANT.
18. FOR PAVEMENT PLAN, REFER TO ARCHITECTURAL DRAWINGS.
19. SIDEWALKS ADJACENT TO PARKING AND/OR BUILDING TO BE AT ELEVATIONS SHOWN ON PLANS.
20. CONTRACTOR SHALL BE RESPONSIBLE FOR THE REMOVAL AND OFFSITE DISPOSAL OF ALL CONCRETE, ASPHALT, VEGETATION, TREES, EXCAVATED MATERIAL AND OTHER DEBRIS FROM CONSTRUCTION ACTIVITIES UNDER THIS CONTRACT. DISPOSAL OF SAME SHALL BE IN CONFORMANCE WITH CITY REGULATIONS.
21. ALL DROP INLET TOPS SHALL BE FIELD VERIFIED AND ADJUSTED IF NEEDED TO ENSURE POSITIVE DRAINAGE.
22. STORM DRAINAGE PIPE(SDP) SHALL BE REINFORCED CONCRETE PIPE(RCP), REINFORCED CONCRETE ARCH PIPE(RCPA), OR CORRUGATED PLASTIC PIPE(CPP) DUAL WALL WITH SMOOTH LINED INTERIOR WHICH SHALL BE ADVANCED DRAINAGE SYSTEMS(ADS) N-12 WT PIPE OR HP STORM, OR CONTECH A-2000 PIPE OR APPROVED EQUAL.
23. CONTRACTOR SHALL COORDINATE EXACT LOCATION AND DEPTHS OF UTILITIES AND ROOF DRAIN CONNECTIONS WITH BUILDING CONTRACTOR.(IF APPLICABLE)
24. PRIOR TO FINAL INSPECTION, ALL DRAINAGE PIPE AND STRUCTURES SHALL BE CLEANED OF ANY DEBRIS AND SILT.
25. CONTRACTOR SHALL FAMILIARIZE HIMSELF WITH THE SITE PRIOR TO BID AND ACQUAINT HIMSELF THOROUGHLY WITH ALL EXISTING FACILITIES AND CONDITIONS. FAILURE TO DO SO SHALL NOT RELIEVE THE CONTRACTOR OF THE RESPONSIBILITY OF INSTALLING THE PROJECT TO MEET THE CONDITIONS.
26. REFER TO ARCHITECTURAL DRAWINGS FOR DEMOLITION PLAN.
27. EXISTING CONCRETE SHALL BE FULL DEPTH SAWCUT WHEN TYING INTO PROPOSED IMPROVEMENTS.

Land Surveyors Civil Engineers
Ronkartz-Oestriecher
A Professional Engineering Corporation
1919B Dulles Drive
Lafayette, Louisiana 70506
Ph: (337) 991-9290
Fax: (337) 991-9291

ACSW ARCHITECTS
ABELL+CROZIER + ARCHITECTS SOUTHWEST
PLANNING | ARCHITECTURE | INTERIORS

STORM DRAIN PIPE KEY

SDP1	NOT IN THIS PROJECT
SDP2	NOT IN THIS PROJECT
SDP3	NOT IN THIS PROJECT
SDP4	15" x 37' RCPA @ 0.20%
SDP5	15" x 8' RCPA @ 0.20%
SDP6	NOT IN THIS PROJECT
SDP7	NOT IN THIS PROJECT
SDP8	15" x 53' RCPA @ 0.50%

KEY NOTES

1. NOT USED
2. NOT USED
3. NOT USED
4. NOT USED
5. BOLLARDS (REF: ARCH. DWGS.)
6. NOT USED
7. NOT USED
8. CONCRETE GUTTER AT CURB CUT
9. NOT USED
10. 6" BARRIER CURB
11. FILCRETE AREA UNDER STREET PAVEMENT
12. FLAT CURB SECTION (REF: ARCH. DWGS.)
13. 6" CURB SECTION WITH FLAT CURB
14. TRANSITION 6" BARRIER CURB TO FLAT CURB IN 6'

LEGEND

21.98	DESIGN GRADES - TOP OF PAVEMENT/FINISHED GRADE OR GUTTER LINE
+28.46	EXISTING GRADES

PAVEMENT NOTE

ALL PAVEMENT SECTIONS SHALL BE PER GEOTECHNICAL REPORT BY SITE ENGINEERING DATE JULY 10, 2019

KEY PLAN

Construction Documents

No.	Description	Date

4/1/20

STATE OF LOUISIANA
CLIFTON A. OESTRIECHER III
Reg. No. 31874
REGISTERED PROFESSIONAL ENGINEER IN CIVIL ENGINEERING

ULL Hebrard Blvd

Grading and Drainage

Copyright 2020 ACSW

ACSW Project number	18026
Date	04-01-2020
Drawn by	J.P.M.
Checked by	C.A.O.

C1.1H

Scale	AS SHOWN

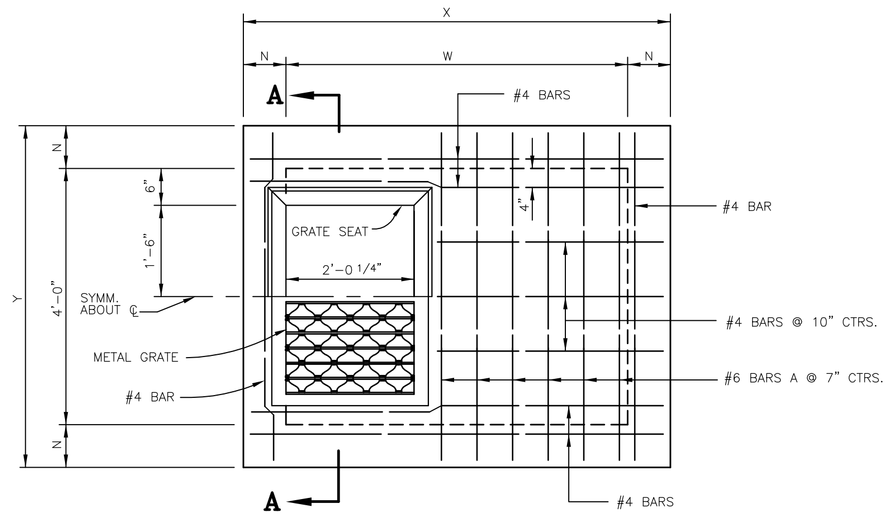

PLAN

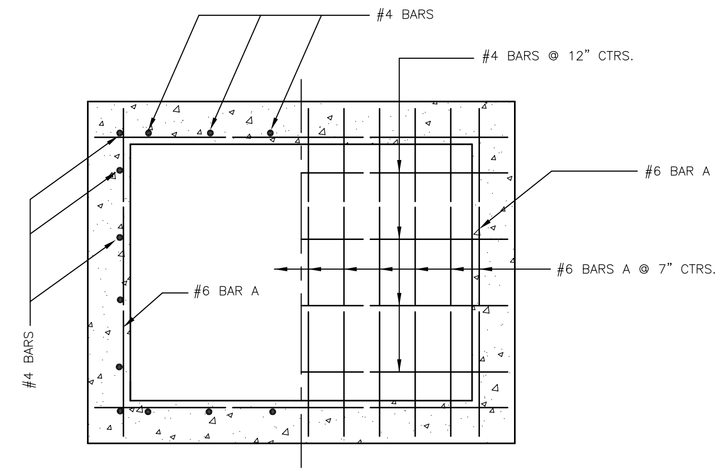

SECTION B–B

SHOWING BOTTOM SLAB AND WALLS

DIMENSIONS										
TRUNK PIPE	DEPTH TO 8 FEET					DEPTH 8FT. TO 12FT.				
	N	T	W	X	Y	N	T	W	X	Y
INCHES	INCH	INCH	FT.–IN.	FT.–IN.	FT.–IN	INCH	INCH	FT.–IN.	FT.–IN.	FT.–IN.
42	7	9	4–3	5–5	5–2	8	9	4–3	5–7	5–4
48	7	9	4–10	6–0	5–2	8	9	4–10	6–2	5–4
54	7	9	5–5	6–7	5–2	8	9	5–5	6–9	5–4
60	7	10	6–0	7–2	5–2	8	10	6–0	7–4	5–4
66	7	10	6–7	7–9	5–2	8	10	6–7	7–11	5–4
72	7	10	7–2	8–4	5–2	8	10	7–2	8–6	5–4

NOTE: X AND W DIMENSIONS MAY BE VARIED FOR SKEWED PIPE, BUT W SHALL NOT EXCEED 7'–2".

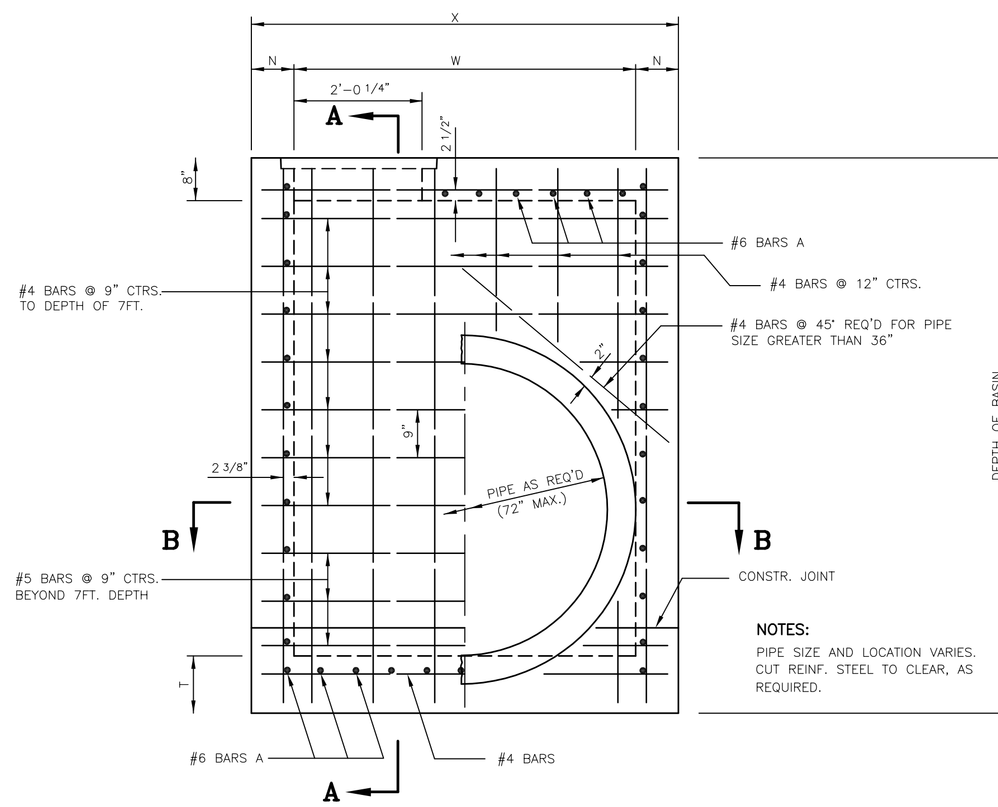

NOTES:

PIPE SIZE AND LOCATION VARIES. CUT REINF. STEEL TO CLEAR, AS REQUIRED.

SECTION A–A

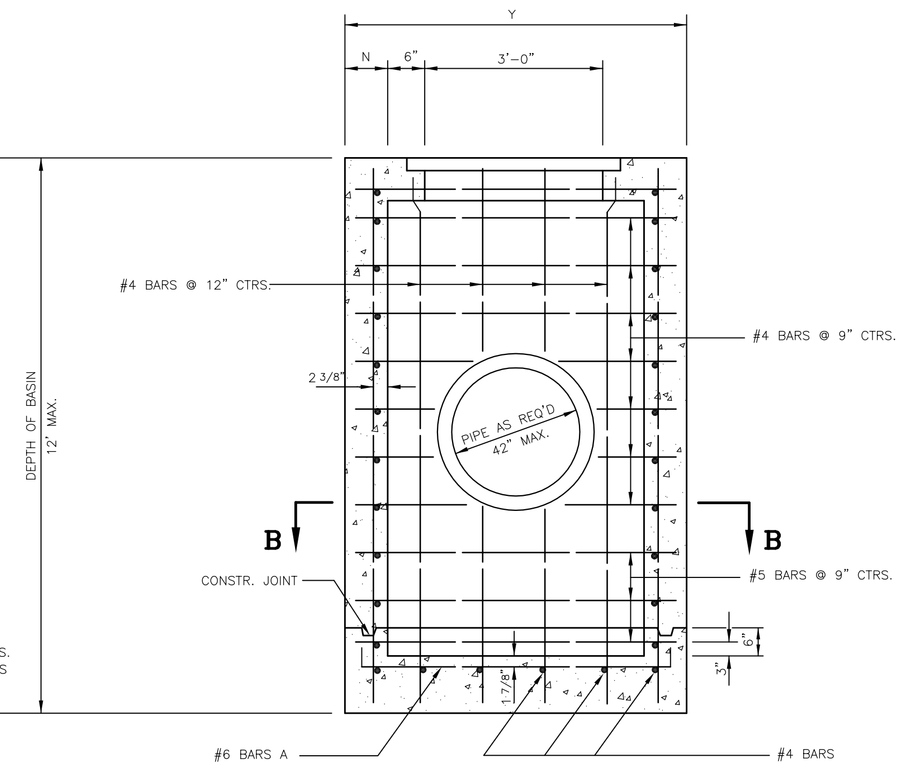

ELEVATION

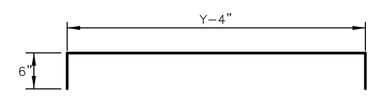

#6 BARS "A"

(4 1/2" DIAM. PIN)

GENERAL NOTES:

DIMENSIONS RELATING TO REINFORCING STEEL ARE TO BAR CENTERS.

VERTICAL BARS "B" MAY BE SPLICED. SPLICE LENGTH IS 35 DIAMETERS.

USE EAST JORDAN IRON WORKS, V-4860 GALV FRAME WITH V-4863 GALV GRATE.

THIS STANDARD PLAN WAS ADOPTED AND MODIFIED FROM LA. DOTD STANDARD PLAN CB–02. DATE:6/25/82

Ronkartz-Oestriecher
A Professional Engineering Corporation
Land Surveyors Civil Engineers
1919B Dulles Drive
Lafayette, Louisiana 70506
Ph: (337) 991–9290
Fax: (337) 991–9291

ACSW ARCHITECTS
ABELL+CROZIER + ARCHITECTS SOUTHWEST
PLANNING | ARCHITECTURE | INTERIORS

KEY PLAN

Construction Documents

No.	Description	Date

4/1/20

STATE OF LOUISIANA
CLIFTON A. OESTRIECHER III
Reg. No. 31874
REGISTERED PROFESSIONAL ENGINEER IN CIVIL ENGINEERING

ULL Hebrard Blvd.

CB-01

Copyright 2020 ACSW

ACSW Project number	18025
Date	04-01-2020
Drawn by	J.P.M.
Checked by	C.A.O.

C2.1H

Scale	AS SHOWN

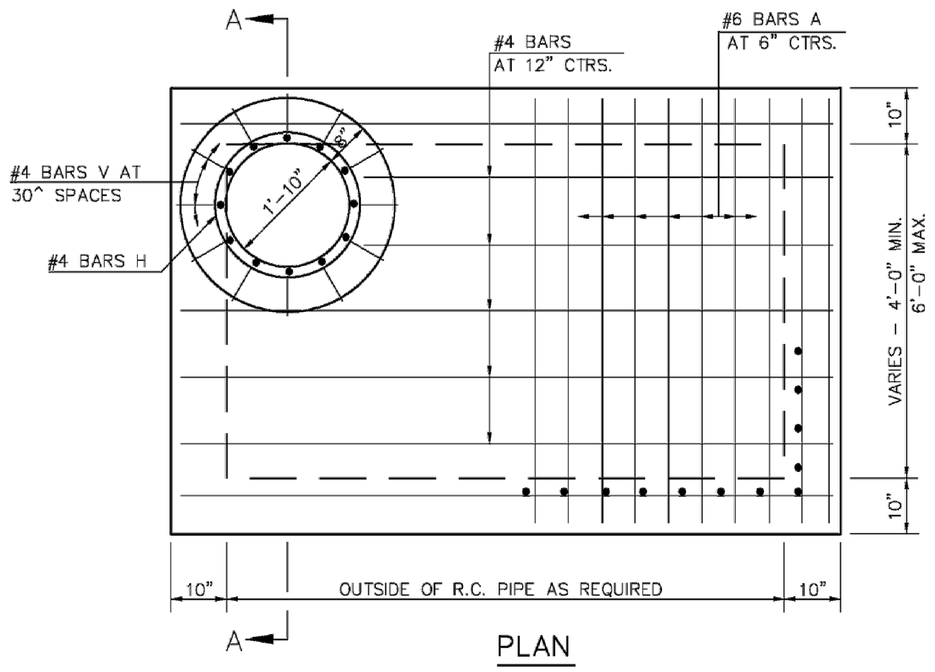

PLAN

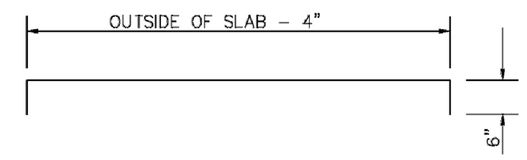

#6 BARS A

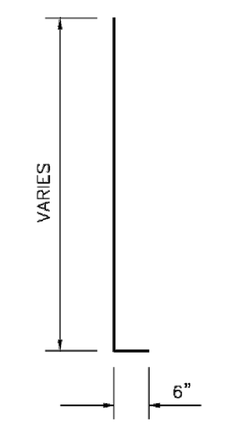

#4 BARS V

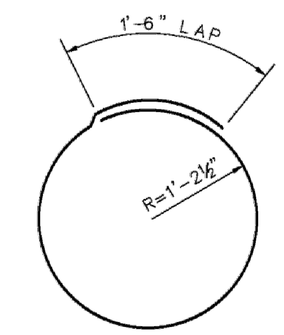

#4 BARS H

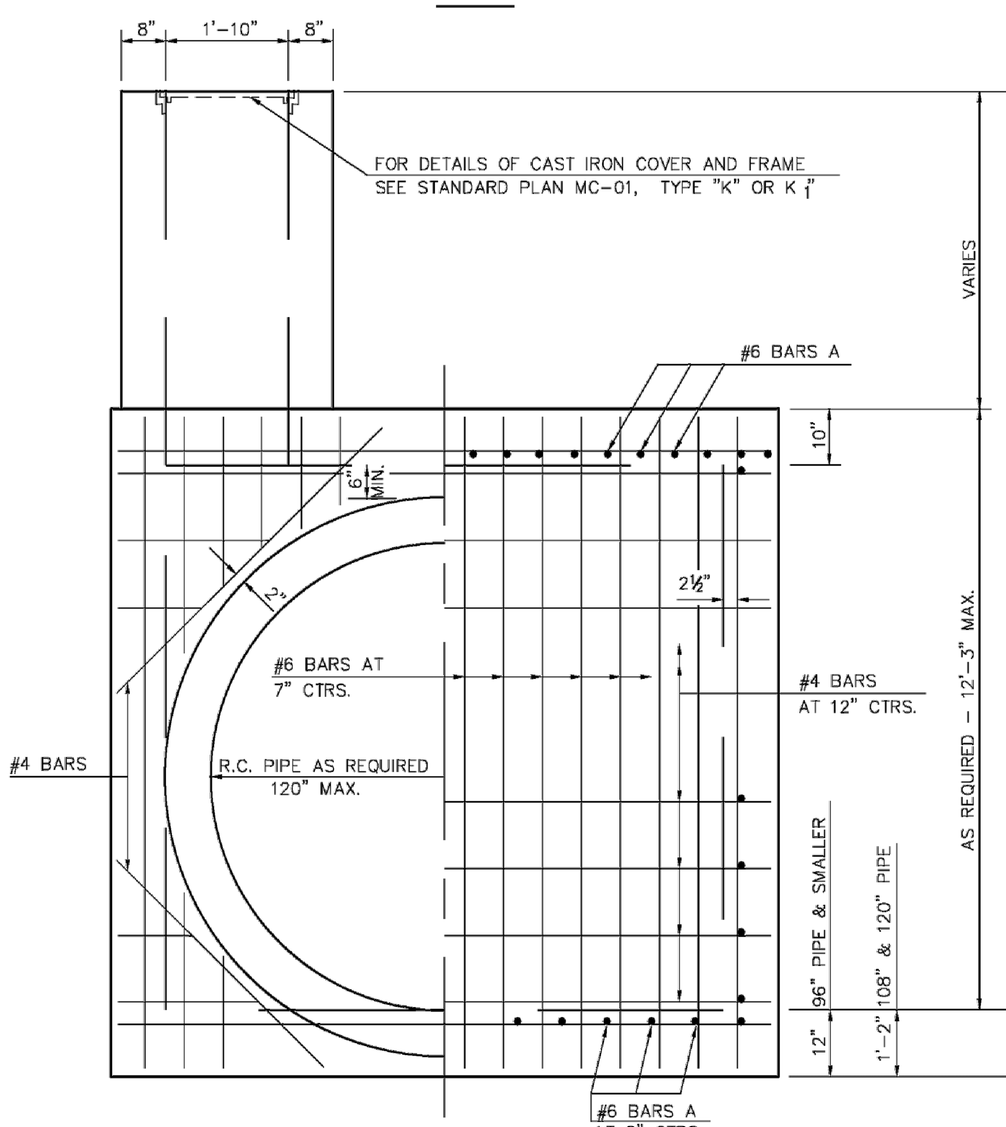

ELEVATION

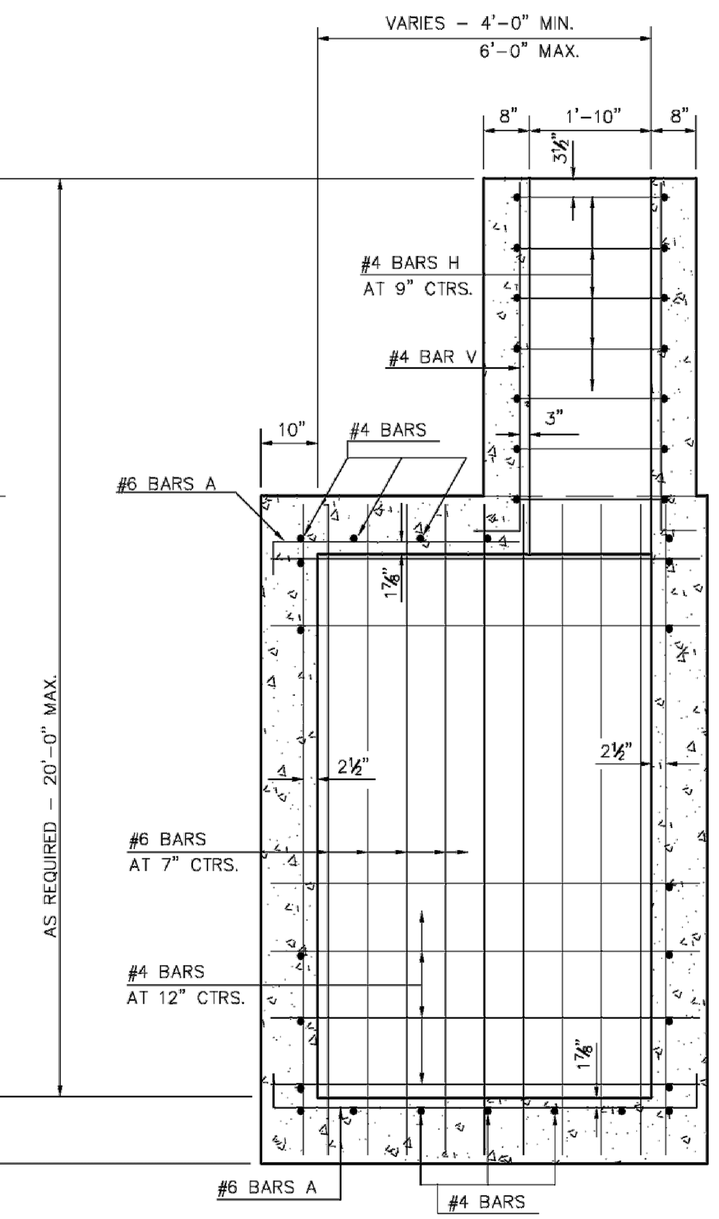

SECTION A–A

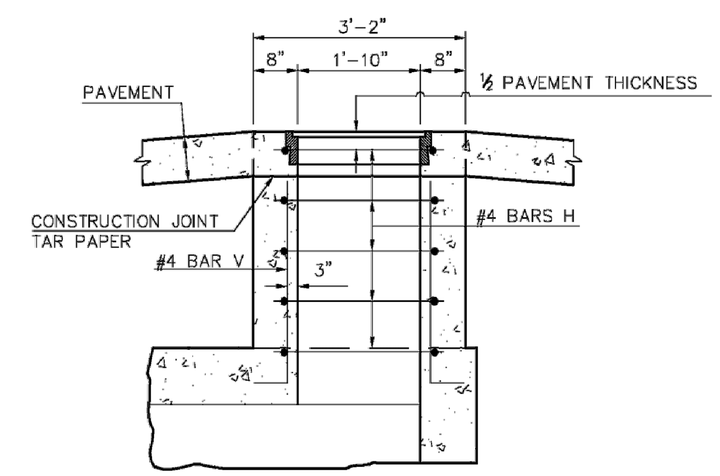

DETAIL A

(MANHOLE IN PAVEMENT AREA)

GENERAL NOTES :

1) PROJECT SPECIFICATIONS FOR MANHOLES SHALL APPLY.
2) PROJECT SPECIFICATIONS FOR REINFORCEMENT SHALL APPLY FOR FURNISHING AND PLACING REINFORCING STEEL.
3) DIMENSIONS RELATING TO REINFORCING STEEL ARE TO BAR CENTERS.
4) SEE "DETAIL A" FOR DETAILS OF MANHOLE IN A PAVEMENT AREA.

JUNE 2010

R.C. MANHOLE
MAX. PIPE: 120" x 60", MAX. DEPTH: 20'
1 OF 1

MH-06

SHEET

OF

ACSW ARCHITECTS
ABELL+CROZIER + ARCHITECTS SOUTHWEST
PLANNING | ARCHITECTURE | INTERIORS

KEY PLAN

Construction Documents

No.	Description	Date

STATE OF LOUISIANA
CLIFTON A. OESTRIECHER III
Reg. No. 31874
REGISTERED PROFESSIONAL ENGINEER IN CIVIL ENGINEERING

ULL Hebrard Blvd.

MH-06

Copyright 2020 ACSW

ACSW Project number	18025
Date	04-01-2020
Drawn by	J.P.M.
Checked by	C.A.O.

C2.2H

Scale	AS SHOWN

Ronkartz-Oestriecher
A Professional Engineering Corporation
Land Surveyors Civil Engineers
1919B Dulles Drive
Lafayette, Louisiana 70506
Ph: (337) 991-9290
Fax: (337) 991-9291

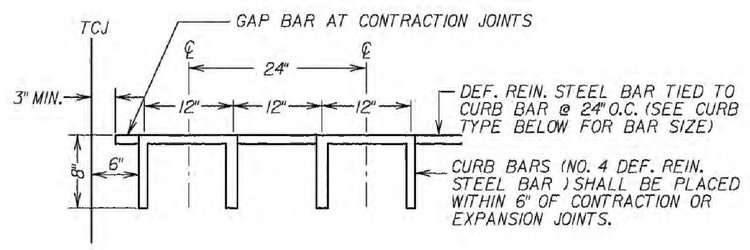

BAR DETAIL- BARRIER (INTEGRAL)

SHOWING DIMENSIONS AND SPACING OF NO. 4 CURB BARS AND LONGITUDINAL BARS FOR CONC. CURB

NOTE:
WHEN CURB IS POURED MONOLITHICALLY WITH PAVEMENT, THE BITUMINOUS PREFORMED EXPANSION JOINT FILLER SHALL EXTEND TO THE TOP OF JOINT INSERT. WHEN TRANSVERSE JOINTS ARE CONSTRUCTED BY SAWING, THE INITIAL SAW CUT SHALL EXTEND THROUGH THE CURBED SECTION (CURB AND UNDER-LYING PAVEMENT). THE SUBSEQUENT WIDENING CUT FOR THE JOINT SEALANT RESERVOIR SHALL EXTEND INTO THE CURB FOR A DISTANCE NECESSARY TO ENSURE THE SPECIFIED RESERVOIR DEPTH IS BEING MAINTAINED AT THE GUTTER LINE. ALL CURB FACES REGARDLESS OF CURB TYPE SHALL BE SEALED, WHEN TRANSVERSE JOINT IS SAWED THROUGH CURB.

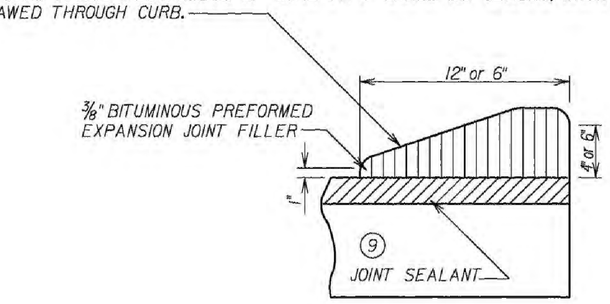

JOINT FILLER DETAIL FOR INTEGRAL CONCRETE CURB (MOUNTABLE OR BARRIER TYPE)

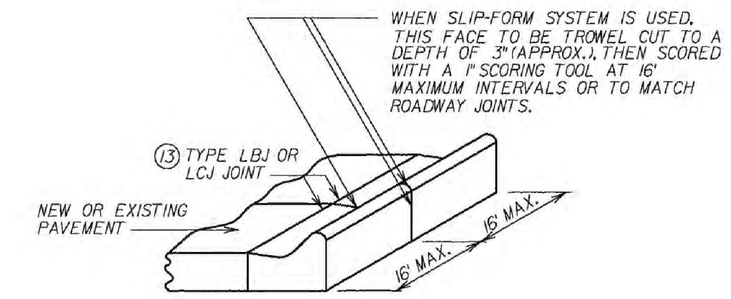

DETAIL SHOWING JOINTS IN CONCRETE CURB AND CURB AND GUTTER

(EXTEND ALL TCJ AND CJ THROUGH CURB AND GUTTER)

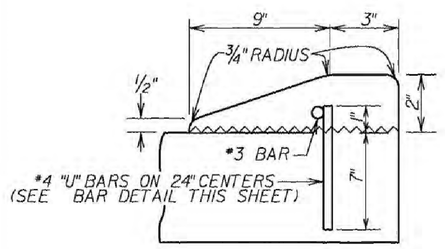

(MODIFIED BARRIER)

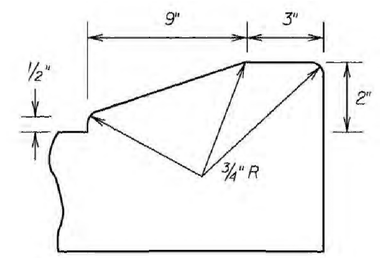

MODIFIED MOUNTABLE CURB THRU DRIVEWAY (MONOLITHIC POUR ONLY)

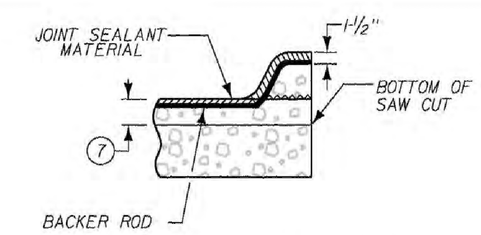

DETAIL FOR JOINT IN CURB POURED INTEGRAL W/PAVEMENT

NOTES:
1. SEE SHEET 3 FOR JOINT DETAILS "A-D" & "G-I".
2. IF JOINT IS SEALED FULL DEPTH THEN NO BACKER ROD IS REQUIRED.
3. FOR SEALING OF EXPANSION JOINTS SEE SECTION A-A ON SHEET 2.

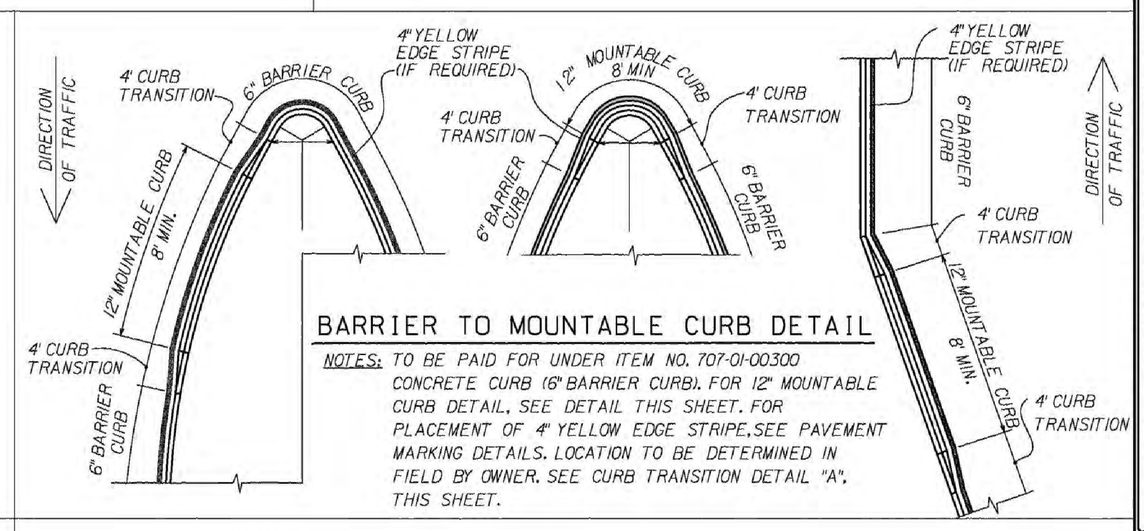

BARRIER TO MOUNTABLE CURB DETAIL

NOTES: TO BE PAID FOR UNDER ITEM NO. 707-01-00300 CONCRETE CURB (6" BARRIER CURB). FOR 12" MOUNTABLE CURB DETAIL, SEE DETAIL THIS SHEET. FOR PLACEMENT OF 4" YELLOW EDGE STRIPE, SEE PAVEMENT MARKING DETAILS. LOCATION TO BE DETERMINED IN FIELD BY OWNER. SEE CURB TRANSITION DETAIL "A", THIS SHEET.

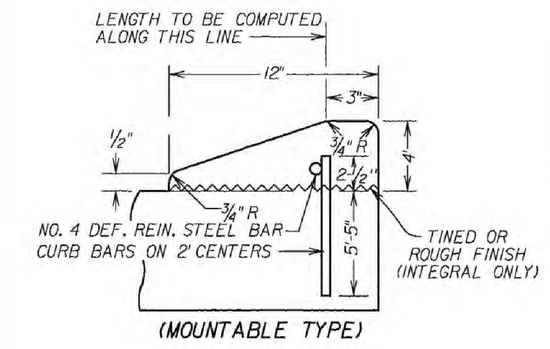

(MOUNTABLE TYPE)

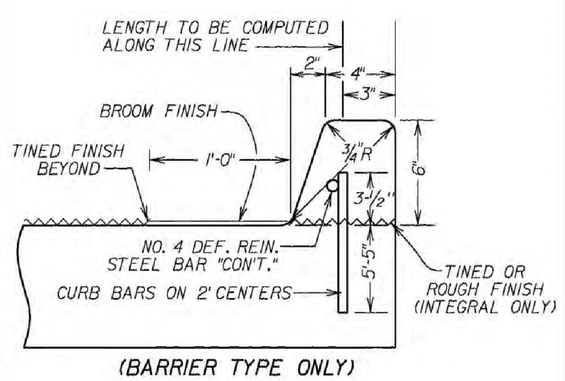

(BARRIER TYPE ONLY)

CONCRETE CURB

STEEL REINFORCEMENT NOT NECESSARY IF CONSTRUCTED MONOLITHICALLY WITH THE PAVEMENT

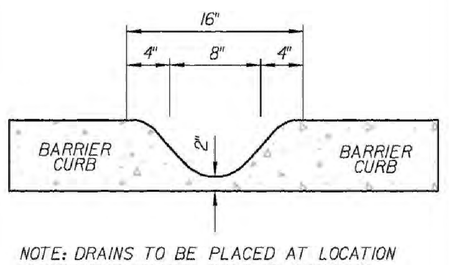

NOTE: DRAINS TO BE PLACED AT LOCATION DESIGNATED BY THE PROJECT ENGINEER @ NO DIRECT PAYMENT

CURB DRAIN DETAIL

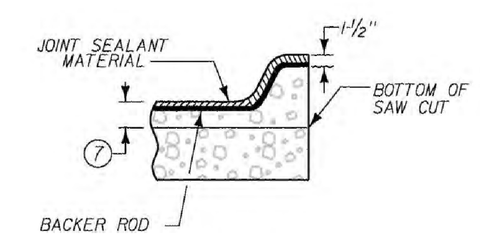

DETAIL FOR JOINT IN CURB POURED MONOLITHIC W/PAVEMENT

NOTES:
1. SEE SHEET 3 FOR JOINT DETAILS "A-D" & "G-I".
2. IF JOINT IS SEALED FULL DEPTH THEN NO BACKER ROD IS REQUIRED.
3. FOR SEALING OF EXPANSION JOINTS SEE SECTION A-A ON SHEET 2.

NOT TO SCALE

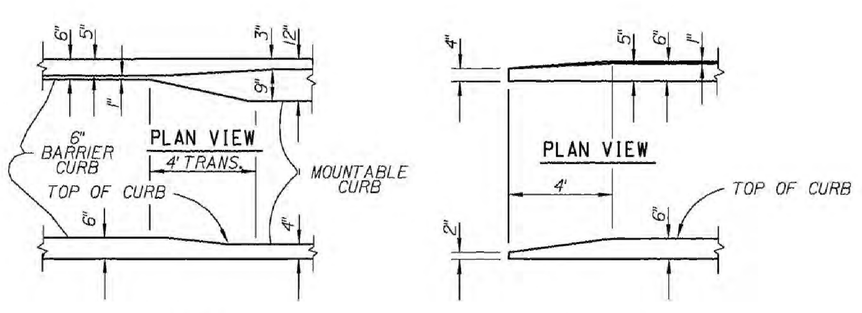

SIDE VIEW DETAIL "A"

SIDE VIEW DETAIL "B"

CURB TRANSITION DETAILS AT TURNOUTS & NOSES

FEBRUARY 2016

PORTLAND CEMENT CONCRETE PAVEMENT DETAILS
4 OF 7

CP-01

SHEET 4 OF 7

ACSW ARCHITECTS
ABELL+CROZIER + ARCHITECTS SOUTHWEST
PLANNING | ARCHITECTURE | INTERIORS

KEY PLAN

Construction Documents

No.	Description	Date

STATE OF LOUISIANA
CLIFTON A. OESTRIECHER III
Reg. No. 31874
REGISTERED PROFESSIONAL ENGINEER IN CIVIL ENGINEERING

ULL Hebrard Blvd.

CP-01
4 OF 7

Copyright 2020 ACSW

ACSW Project number	18025
Date	04-01-2020
Drawn by	J.P.M.
Checked by	C.A.O.

C2.3H

Scale	AS SHOWN

Ronkartz-Oestriecher
A Professional Engineering Corporation
Land Surveyors Civil Engineers
1919B Dulles Drive
Lafayette, Louisiana 70506
Ph: (337) 991-9290
Fax: (337) 991-9291

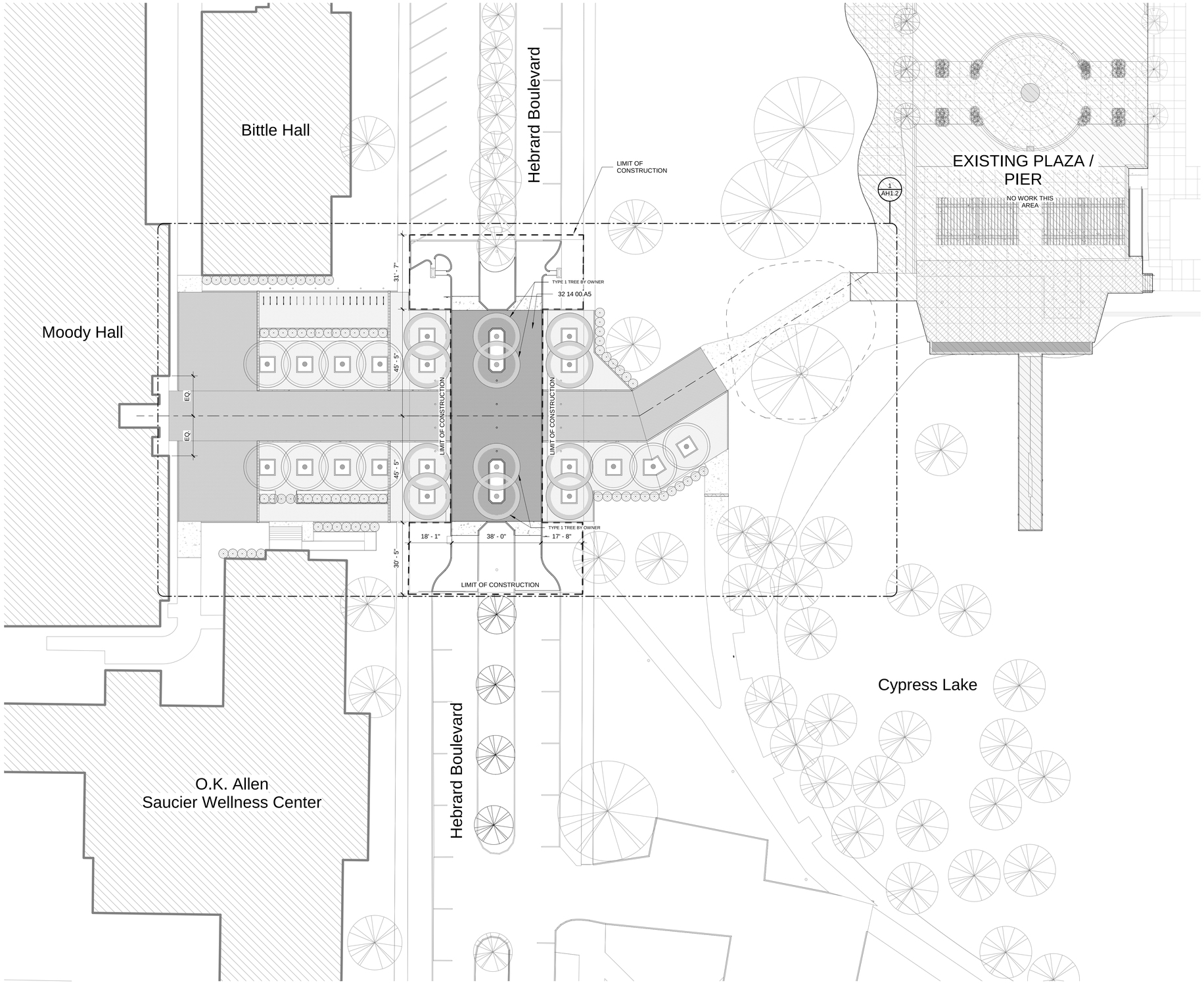

ACSW
ABELL+CROZIER + ARCHITECTS SOUTHWEST
PLANNING | ARCHITECTURE | INTERIORS

KEYNOTE EXPLANATION

32 14 00.A5 PAVER - REFER TO FINISH PLAN FOR LAYOUT

GENERAL NOTES:
1. ALL LANDSCAPING PROVIDED BY OWNER.
2. REFER TO CIVIL SHEETS TOF ROADWORK AND DETAILING.

KEY PLAN

Construction Documents

No.	Description	Date

GREGORY V. DAMICO
NO. 7595
STATE OF LOUISIANA
REGISTERED ARCHITECT

Moody Plaza

Site Plan - Overall

Copyright 2020 ACSW

ASW Project number	18025
Date	04-01-2020
Drawn by	Author
Checked by	Checker

AH1.1

Scale	1" = 20'-0"

3/27/2020 8:43:43 AM

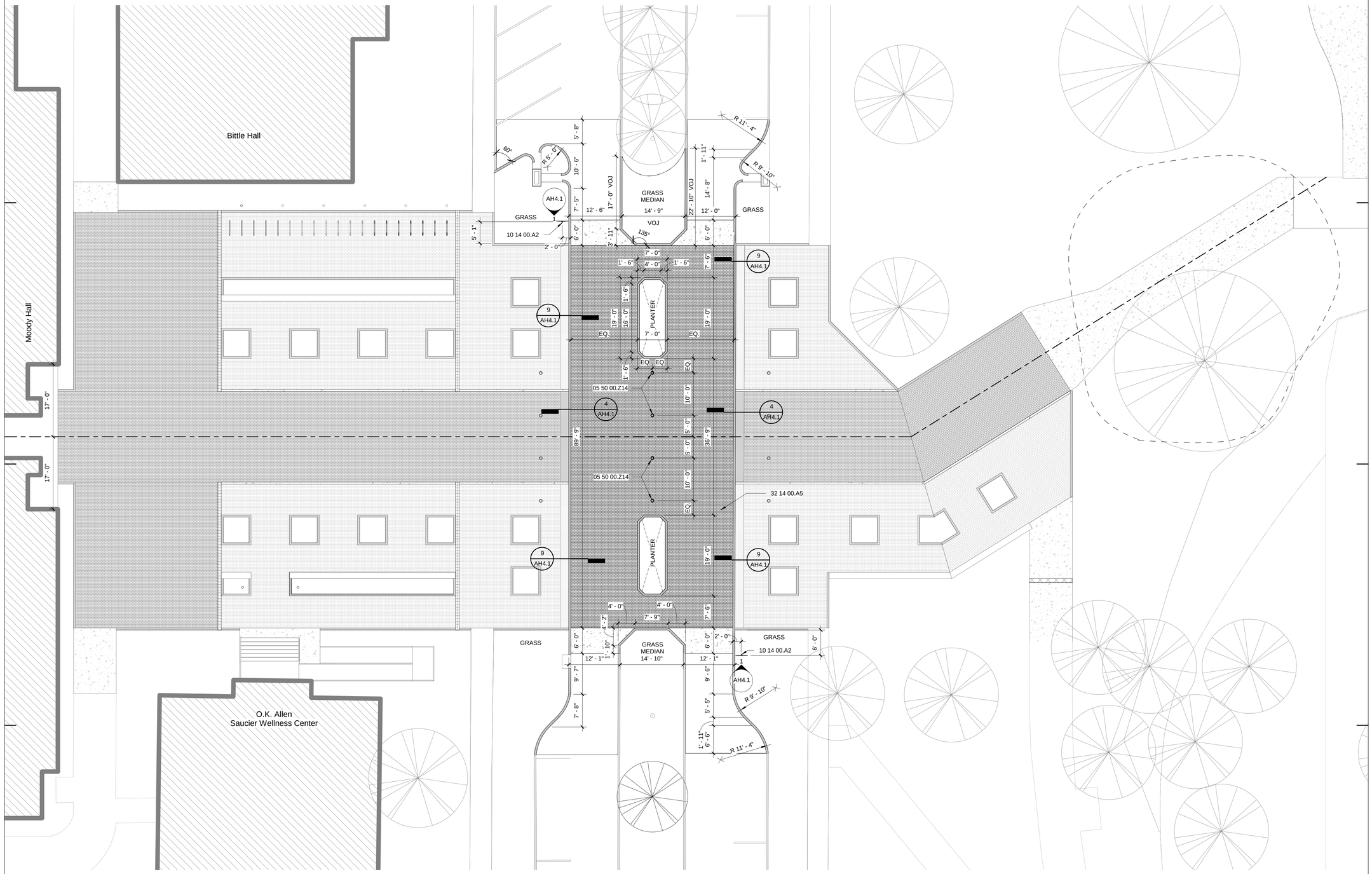

ACSW
ABELL+CROZIER + ARCHITECTS SOUTHWEST
PLANNING | ARCHITECTURE | INTERIORS

KEYNOTE EXPLANATION

05 50 00.Z14 RETRACTABLE BOLLARD
10 14 00.A2 EXTERIOR POST AND PANEL STOP SIGN
32 14 00.A5 PAVER - REFER TO FINISH PLAN FOR LAYOUT

GENERAL NOTES:
1. ALL LANDSCAPING PROVIDED BY OWNER.
2. LANSCAPING NOT SHOWN FOR CLARITY.
3. REFER TO CIVIL SHEETS TOF ROADWORK AND DETAILING.

KEY PLAN

Construction Documents

No.	Description	Date

GREGORY V. DAM
NO. 7595
STATE OF LOUISIANA
REGISTERED ARCHITECT

Moody Plaza

Site (Enlarged Plan)

Copyright 2020 ACSW

ASW Project number	18025
Date	04-01-2020
Drawn by	Author
Checked by	Checker

AH1.2

Scale 3/32" = 1'-0"

3/29/2020 11:33:53 AM

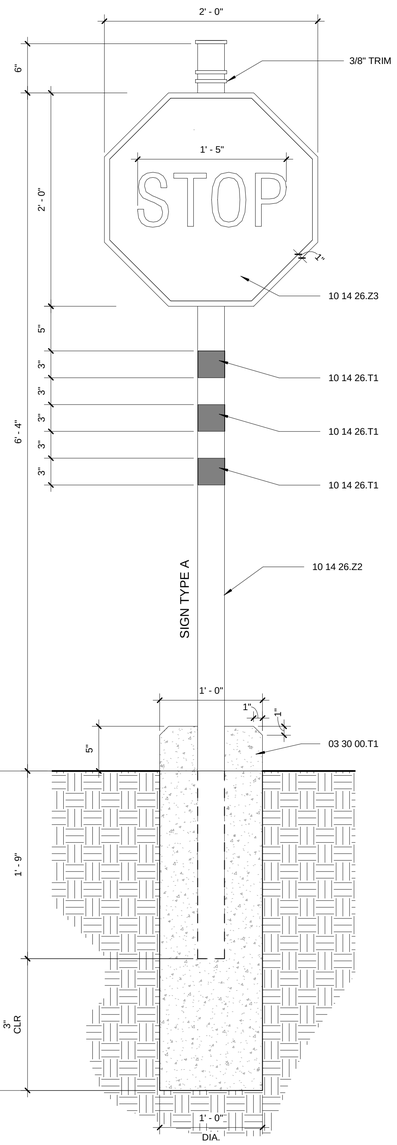

1 Typical Stop Sign Detail
1 1/2" = 1'-0"

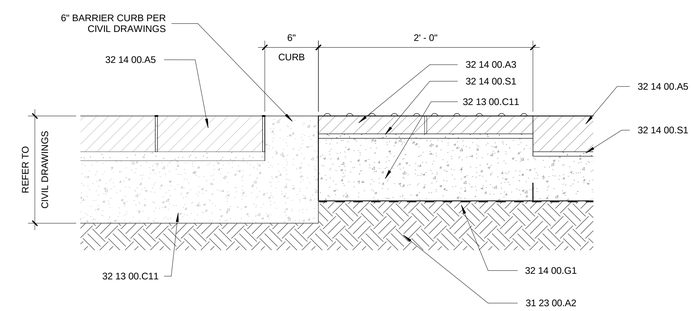

4 HEBRARD - Vehicular Paver @ Road / Plaza
1 1/2" = 1'-0"

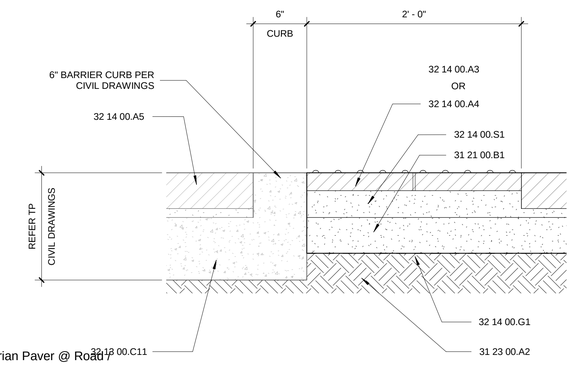

9 HEBRARD - Pedestrian Paver @ Road / Plaza
1 1/2" = 1'-0"

ACSW
ABELL+CROZIER + ARCHITECTS SOUTHWEST
PLANNING | ARCHITECTURE | INTERIORS

KEYNOTE EXPLANATION

03 30 00.T1	TINTED CONCRETE BASE; COLOR TBD
10 14 26.T1	RELFLECTIVE TAPE PER UNIVERSITY STANDARD
10 14 26.Z2	3" DIA. PREFINISHED ALUMINUM POST (COLOR AS SELECTED BY ARCHITECT) SET IN 3000 PSI CONCRETE.
10 14 26.Z3	METAL SIGN WITH TEXT (LETTER SIZE AS INDICATED)
31 21 00.B1	COMPACTED GRANULAR FILL; 4" MIN. DEPTH; SEE SPEC SECTION 31 15 00
31 23 00.A2	PREPARED SUBGRADE; SEE SPEC SECTION 31 15 00
32 13 00.C11	CONCRETE PAVING; SEE CIVIL; SEE SPEC SECTION 32 27 70
32 14 00.A3	CONCRETE PAVER - 12x12 PAVER WITH TRUNCATED DOMES - COLOR 5 FROM MANUF. FULL SELECTION
32 14 00.A4	CONCRETE PAVER - 12X12 PAVER WITH TRUNCATED DOMES - COLOR 6 FROM MANUF. FULL SELECTION
32 14 00.A5	PAVER - REFER TO FINISH PLAN FOR LAYOUT
32 14 00.G1	GEO-TEXTILE FABRIC
32 14 00.S1	SAND BED TO RECEIVE PAVERS

KEY PLAN

Construction Documents

No.	Description	Date

GREGORY V. DAMICO
NO. 7595
STATE OF LOUISIANA
REGISTERED ARCHITECT

Moody Plaza

Site Details

Copyright 2020 ACSW

ASW Project number	18025
Date	04-01-2020
Drawn by	Author
Checked by	Checker

AH4.1

Scale 1 1/2" = 1'-0"

3/29/2020 11:34:40 AM

DATE

04/01/20

Project Manual

for

University of Louisiana at Lafayette
Hebrard Boulevard
Renovations

Lafayette, Louisiana

Architect's Project Number 18025

ACSW Architects

April 1, 2020

University of Louisiana at Lafayette
Hebrard Boulevard Renovations
Lafayette, Louisiana

SET

Section C - Table of Contents

SECTION	TITLE	PAGES
DIVISION 0	**BIDDING REQUIREMENTS, CONTRACT FORMS, & CONDITIONS OF THE CONTRACT**	
	TITLE SHEET	1
TOC	TABLE OF CONTENTS	1 thru 2
DIVISION 00	**CONDITIONS OF THE CONTRACT**	
	Provided by the Owner Under Separate Cover	
DIVISION 01	**GENERAL REQUIREMENTS**	
SID	SOIL INVESTIGATION DATA	1 thru 24
01 10 00	SUMMARY	1 thru 4
01 23 00	ALTERNATES	1 thru 2
01 25 00	SUBSTITUTION PROCEDURES	1 thru 3
01 26 00	CONTRACT MODIFICATION PROCEDURES	1 thru 2
01 29 00	PAYMENT PROCEDURES	1 thru 4
01 31 00	PROJECT MANAGEMENT AND COORDINATION	1 thru 11
01 31 50	ELECTRICAL COORDINATION	1 thru 3
01 32 00	CONSTRUCTION PROGRESS DOCUMENTATION	1 thru 4
01 32 33	PHOTOGRAPHIC DOCUMENTATION	1 thru 3
01 33 00	SUBMITTAL PROCEDURES	1 thru 9
01 35 16	ALTERATION PROJERCT REQUIREMENTS	1 thru 5
01 40 00	QUALITY REQUIREMENTS	1 thru 5
01 50 00	TEMPORARY FACILITIES AND CONTROLS	1 thru 8
01 56 50	ENVIRONMENTAL PROTECTION	1 thru 2
01 60 00	PRODUCT REQUIREMENTS	1 thru 6
01 73 00	EXECUTION	1 thru 3
01 73 29	CUTTING AND PATCHING	1 thru 3
01 77 00	CLOSEOUT PROCEDURES	1 thru 7
01 78 23	OPERATION AND MAINTENANCE DATA	1 thru 5
01 78 39	PROJECT RECORD DOCUMENTS	1 thru 2
DIVISION 02	**EXISTING CONDITIONS**	
02 41 00	SELECTIVE STRUCTURE DEMOLITION	1 thru 6
DIVISION 03	**CONCRETE**	
03 31 00	CAST-IN-PLACE CONCRETE	1 thru 5
DIVISION 04	**MASONRY**	
	NONE USED THIS PROJECT	

DIVISION 05 METALS

05 50 00 METAL FABRICATIONS 1 thru 6

DIVISIONS 06 WOOD, PLASTICS, AND COMPOSITES

NONE USED THIS PROJECT

DIVISION 07 THERMAL AND MOISTURE PROTECTION

07 92 00 JOINT SEALANTS 1 thru 6

DIVISIONS 08 THRU 09

NONE USED THIS PROJECT

DIVISION 10 SPECIALTIES

10 14 26 PANEL SIGNS 1 thru 5

DIVISIONS 11 THRU 30

NONE USED THIS PROJECT

DIVISION 31 EARTHWORK

31 10 00 SITE CLEARING 1 thru 5
31 15 00 EARTHWORK FOR CIVIL SECTIONS 1
31 21 00 BASE AND SUBBASSE MATERIALS FOR PEDESTRIAN PAVEMENT AREAS 1 thru 7

DIVISION 32 EXTERIOR IMPROVEMENTS

32 14 00 UNIT PAVING 1 thru 8
32 27 70 RIGID PAVEMENT FOR CIVIL SECTIONS 1
32 30 50 INCIDENTAL CONSTRUCTION 1

DIVISION 33 UTILITIES

33 00 00 WATER AND SEWER 1
33 27 20 CULVERTS AND STORM DRAINS 1

DIVISIONS 34 THRU 49

NONE USED THIS PROJECT

END OF SECTION TOC

Section SID - Soil Investigation Data

INTERPRETATION

Soil investigation data is provided only for the information and the convenience of bidders. The Owner and the Architect/Engineer disclaim any responsibility for the accuracy, true location, and extent of the soils investigation that has been prepared by others. The Owner and the Architect/Engineer further disclaim responsibility for interpretation of that data by bidders, as in projecting soil-bearing values, soil profiles, soil stability, and the presence, level, and extent of underground water.

**SOIL INVESTIGATION DATA, ALTHOUGH CONTAINED HEREIN,
IS NOT A PART OF THE CONTRACT DOCUMENTS.**

SITE ENGINEERING, INC.
SELECTION ▪ INVESTIGATION ▪ TESTING ▪ ENGINEERING
650 ALBERTSON PARKWAY ▪ BROUSSARD, LA 70518
PHONE 337-981-1414
FAX 337-981-1402

July 10, 2019

Mr. William J. Crist
Facility Management
University of Louisiana at Lafayette
Post Office Box 43646
Lafayette, Louisiana 70504-3646

RE: Geotechnical Engineering Services Report
Proposed Moody Hall Plaza Renovations
University of Louisiana at Lafayette
Hebrard Boulevard
Lafayette, Louisiana
SITE Engineering Project 19-G052-01

Dear Mr. Crist:

This report transmits the results of our geotechnical exploration for the above referenced project. The investigation was performed in general accordance with SITE Engineering Proposal Number 19-074G dated April 2, 2019. Our services were authorized in Purchase Order Number P1902709 issued by the University of Louisiana at Lafayette on April 15, 2019.

The purpose of this exploration was to investigate the existing subsurface conditions at the site and analyze these conditions for support of the proposed structures and pavements. This report includes the results of our field and laboratory testing and provides recommendations for site preparation, foundation and pavement design, and construction.

We appreciate the opportunity to provide our services to your project and look forward to working with you in the future. If you have any questions pertaining to this report, or if we may be of further service, please do not hesitate to contact our office.

Sincerely,
SITE ENGINEERING, INC.

Clint S. McDowell, P.E.
President

Distribution: 3 – Above

SITE ENGINEERING, INC.

GEOTECHNICAL ENGINEERING SERVICES REPORT

PROPOSED MOODY HALL PLAZA RENOVATIONS
UNIVERSITY OF LOUISIANA AT LAFAYETTE
HEBRARD BOULEVARD
LAFAYETTE, LOUISIANA

SITE ENGINEERING REPORT NUMBER: 19-G052-01

Prepared For

Mr. William J. Crist
Facility Management
University of Louisiana at Lafayette
Post Office Box 43646
Lafayette, Louisiana 70504-3646

July 10, 2019

By

SITE ENGINEERING, INC.
650 Albertson Parkway
Broussard, Louisiana 70518
(337) 981-1414

Jarod J. Breaux, P.E. (#39061)
Project Engineer

Clint S. McDowell, P.E. (#27983)
President

TABLE OF CONTENTS

1.0 EXECUTIVE SUMMARY 1

2.0 PROJECT INFORMATION 2

2.1 PROJECT AUTHORIZATION 2
2.2 PROJECT DESCRIPTION 2
2.3 PURPOSE AND SCOPE OF SERVICES 2

3.0 SITE AND SUBSURFACE CONDITIONS 4

3.1 PROJECT LOCATION AND SITE DESCRIPTION 4
3.2 SUBSURFACE CONDITIONS 4
3.3 GROUNDWATER INFORMATION 5

4.0 EVALUATION AND RECOMMENDATIONS 6

4.1 GENERAL 6
4.2 SITE PREPARATION 6
4.3 SHALLOW FOUNDATION RECOMMENDATIONS 7
4.4 SETTLEMENT OF SHALLOW FOUNDATION SYSTEM 8
4.5 UPLIFT RESISTANCE OF SHALLOW FOUNDATION ELEMENTS 8
4.6 OTHER FOUNDATION TYPES 8

5.0 PAVEMENT RECOMMENDATIONS 9

6.0 CONSTRUCTION CONSIDERATIONS 12

6.1 CONSTRUCTION TESTING AND INSPECTION 12
6.2 MOISTURE SENSITIVE SOILS/WEATHER RELATED CONCERNS 12
6.3 DRAINAGE AND GROUNDWATER CONCERNS 12
6.4 EXCAVATIONS 13

7.0 REPORT LIMITATIONS 14

APPENDIX
BORING LOCATION DIAGRAM
KEY TO TERMS AND SYMBOLS USED ON LOGS
BORING LOGS (B-1 THRU B-3)

1.0 EXECUTIVE SUMMARY

SITE Engineering, Inc. has completed an exploration and evaluation of the subsurface conditions for the proposed Moody Hall Plaza renovations to be constructed on Hebrard Boulevard located on the campus of the University of Louisiana at Lafayette. The project will consist of the construction of several architectural elements including several brick walls and a trellis-type structure. It is further understood that a portion of Hebrard Boulevard will be reconstructed utilizing pavers. The pavers will be placed over a concrete section capable of supporting the anticipated traffic loads.

The subsurface conditions in the areas intended for construction were explored by the performance of soil test borings. As requested, our scope of services included drilling a total of three (3) borings to depths ranging from 5 to 20 feet below the existing ground surface. At the time of drilling, the construction areas associated with the proposed architectural elements were generally grass/tree covered. Concrete sidewalks, as well as pedestrian elements (lighting, benches, bicycle racks, etc.) were also present. The area associated with the proposed paver construction was occupied by the existing Hebrard Boulevard and consisted of portland cement concrete surfacing. It is assumed all existing infrastructure currently present within the proposed construction areas will be removed to facilitate construction.

The structural borings (B-1 and B-2) generally encountered 6 to 8 inches of lean clay and silty clay topsoil. The pavement boring (B-3) encountered approximately 6¾ inches of portland cement concrete. These surficial materials were underlain by very stiff to stiff fat to lean clay soils to the boring completion depth of 5 feet within the pavement boring and to a depth of about 12 feet within the structural borings. Below this depth, the structural borings encountered stiff fat clay soils extending to a depth of at least 20 feet, the maximum depth explored.

Groundwater was encountered during the drilling operations at a depth of 15 feet below the existing ground surface within the structural borings (B-1 and B-2). The pavement (B-3) boring did not encounter groundwater within the depth explored. Immediately after completion of the drilling operations the borings were plugged and abandoned due to safety concerns. Therefore, subsequent delayed groundwater readings were not possible. The boring logs included in the appendix of this report should be reviewed for specific soil and groundwater information.

The near surface soils encountered in the borings performed at this site are considered good in strength and support capabilities and are low in shrink/swell (volume change) potential. Provided the site preparation recommendations presented in this report are followed, the planned structures may be supported on relatively shallow foundation systems consisting of isolated spread footings, continuous wall footings, and grade beams.

Recommendations are also being provided for a rigid (portland cement concrete) pavement system for the proposed Hebrard Boulevard paver placement. Details related to site development, foundation and pavement design, and construction considerations are included in subsequent sections of this report. The owner/designer should not rely solely on this Executive Summary and must read and evaluate the entire contents of this report prior to utilizing our engineering recommendations in preparation of design/construction documents.

2.0 PROJECT INFORMATION

2.1 Project Authorization

SITE Engineering, Inc. has completed a geotechnical exploration for the proposed Moody Hall Plaza renovations to be constructed on Hebrard Boulevard located on the campus of the University of Louisiana at Lafayette. The investigation was performed in general accordance with SITE Engineering Proposal Number 19-074G dated April 2, 2019. Our services were authorized by Purchase Order Number P1902709 issued by the University of Louisiana at Lafayette on April 15, 2019.

2.2 Project Description

The project will consist of the construction of several architectural elements, including several brick walls and a trellis-type structure. Based on the provided information, structural loads associated with the aforementioned structures are anticipated to be on the order of 9 kips in compression and/or uplift. Wall loads associated with the brick walls should be less than 3 kips per linear foot.

It is further understood that a portion of Hebrard Boulevard will be reconstructed utilizing pavers. The pavers will be placed over a concrete section capable of supporting the anticipated traffic loads. Traffic loading information including the types of vehicles and frequencies has also not been provided at this time. However, the table provided later in this report details the assumed traffic distribution utilized in our analyses.

Existing site grades and proposed finished elevations have also not been provided at this time. However, we have assumed that less than 12 inches of cut and/or fill will be required to reach design grade within the proposed construction areas.

The geotechnical recommendations presented in this report are based on the available project information, structure locations, and the subsurface materials encountered in the borings and as described in this report. If any of the noted information is incorrect, please inform SITE Engineering, Inc. in writing so that we may amend the recommendations presented in this report if appropriate and if desired by the client. SITE Engineering, Inc. will not be responsible for the implementation of the recommendations presented in this report if not notified of changes in the project.

2.3 Purpose and Scope of Services

The purpose of this geotechnical investigation was to explore the subsurface conditions at the site to enable an evaluation of acceptable foundation and pavement systems for the proposed project. As requested, our scope of services included drilling a total of three (3) soil test borings to depths ranging from 5 to 20 feet below the existing ground surface, select laboratory testing of the sampled subsurface soils, and preparation of this geotechnical report.

This report briefly outlines the testing procedures, presents available project information, describes the site and subsurface conditions, and presents general recommendations regarding the following:

- General recommendations for site preparation, grading, and fill placement;
- Recommendations for design of shallow foundation elements;
- Estimates of settlement for the recommended foundation type; and;
- General pavement design criteria and subgrade preparation for rigid pavement systems.

Our services did not include an environmental assessment for determining the presence or absence of wetlands, or hazardous or toxic materials in the soil, surface water, groundwater, or air on or below, or around this site. Any statements in this report or on the boring logs regarding odors, colors, and unusual or suspicious items or conditions are strictly for informational purposes.

3.0 SITE AND SUBSURFACE CONDITIONS

3.1 Project Location and Site Description

The site for the proposed Moody Hall Plaza renovations is located on Hebrard Boulevard at the University of Louisiana at Lafayette. The proposed construction will generally be performed east adjacent to Moody Hall along Hebrard Boulevard. At the time of drilling, the construction areas associated with the proposed architectural elements were generally grass/tree covered. Concrete sidewalks, as well as pedestrian elements (lighting, benches, bicycle racks, etc.) were also present. The area associated with the proposed paver construction was occupied existing portland cement concrete pavement (Hebrard Boulevard). It is assumed all existing infrastructure currently present within the proposed construction areas will be removed to facilitate construction.

The site was dry and in a firm condition. Our all-terrain drilling rig and support pick-up truck experienced little to no difficulty in accessing the boring locations.

Existing site topographic information was not provided. However, based on visual observations, the subject property appeared to be relatively level with little elevation difference between high and low points.

3.2 Subsurface Conditions

The subsurface conditions were explored with a total of three (3) borings drilled to depths ranging from 5 to 20 feet below the existing ground surface. The number, depths, and locations of the borings were determined by Architects Southwest. The borings were located on the subject site by a representative of SITE Engineering, Inc. utilizing a surveyor's wheel and a preliminary site development plan prepared by Architects Southwest. The approximate location of each boring can be seen on the boring location diagram provided in the appendix of this report.

The borings were advanced utilizing continuous flight auger and hand auger drilling techniques. Soil samples were obtained continuously in the upper ten feet of the borings and on five-foot centers thereafter to the boring completion depths. Drilling and sampling methods were accomplished in general accordance with ASTM procedures. Upon completion of the drilling, the boreholes were plugged and abandoned in accordance with the requirements of the Louisiana Department of Natural Resources. The pavement surface at the location of boring B-3 was patched with a quick setting concrete mixture upon completion.

Undisturbed and disturbed samples of cohesive soils were obtained using thin-wall tube sampling procedures in general accordance with the procedures for "Thin-Walled Tube Geotechnical Sampling of Soils" (ASTM D 1587). These samples were extruded in the field with a hydraulic ram. Undisturbed samples were identified according to boring number and depth, were placed in polyethylene plastic wrapping to protect against moisture loss, and were transported to the laboratory in special containers to prevent disturbance.

In addition to the field exploration, a supplemental laboratory-testing program was conducted to evaluate pertinent engineering characteristics of the subsurface soils necessary in analyzing the behavior of the foundation system for the project. The laboratory-testing program included visual classification and water content tests on all soil samples. In addition, selected samples were subjected to unconfined compressive strength testing, Atterberg Limits determinations, and percent passing a number 200 sieve analysis. Additional estimates of shear strength were also determined through the use of a pocket penetrometer and hand torvane.

The structural borings (B-1 and B-2) generally encountered 6 to 8 inches of lean clay and silty clay topsoil. The pavement boring (B-3) encountered approximately 6¾ inches. These surficial materials were underlain by very stiff to stiff fat clay and lean clay soils to the boring completion depth of 5 feet within the pavement boring and to a depth of about 12 feet within the structural borings. Below this depth, the structural borings encountered stiff fat clay soils to a depth of 20 feet, the maximum depth explored.

The above subsurface description is of a generalized nature to highlight the major subsurface stratification features and material characteristics. The boring logs included in the appendix should be reviewed for specific information at individual boring locations. These records include soil descriptions, stratifications, locations of the samples and laboratory test data. The stratifications shown on the boring logs represent the conditions only at the actual boring locations. Variations may occur and should be expected between boring locations and elsewhere on the site. The stratifications represent the approximate boundary between subsurface materials and the actual transition may be gradual. The samples which were not altered by laboratory testing will be retained for 60 days from the date of this report and then discarded.

3.3 Groundwater Information

Groundwater was encountered during the drilling operations at a depth of 15 feet below the existing ground surface within the structural borings (B-1 and B-2). The pavement (B-3) boring did not encounter groundwater within the depth explored. Immediately after completion of the drilling operations the borings were plugged and abandoned due to safety concerns. Therefore, subsequent delayed groundwater readings were not possible. The boring logs included in the appendix of this report should be reviewed for specific soil and groundwater information.

The groundwater information provided above were the levels recorded at the time of our field investigation. In addition, it may take several days for the groundwater level to become static in an open borehole. Therefore, it should be noted, that it is possible for a groundwater table to fluctuate depending upon climatic and rainfall conditions. We recommend that the Contractor determine the actual groundwater levels at the site at the time of the construction activities.

4.0 EVALUATION AND RECOMMENDATIONS

4.1 General

The type and depth of foundation suitable for a given structure primarily depends on several factors including the subsurface conditions, the function of the structure, the loads it may carry, the cost of the foundation and the criteria set by the Design Engineer with respect to vertical and differential movement which the structure can withstand without damage. The near surface soils encountered in the borings performed at this site are considered good in strength and support capabilities and are low in shrink/swell (volume change) potential. Provided the site preparation recommendations presented in this report are followed, the planned structures may be supported on relatively shallow foundation systems consisting of isolated spread footings, continuous wall footings, and grade beams. Specific details related to design and installation of the foundation system will be presented in subsequent paragraphs.

4.2 Site Preparation

We recommend that all vegetation, topsoil, organics, concrete, infrastructure, utilities, and any soft, loose or deleterious soils in the areas intended for construction and for a distance of at least 5 feet beyond the perimeter of the proposed structures and 2 feet beyond the perimeter of proposed pavement areas be stripped from the site and either wasted or stockpiled for later use in landscaping. Based on the borings performed within the grass covered areas (B-1 and B-2), the depth of stripping necessary to ensure removal of all organic, or otherwise deleterious materials will be on the order of 6 to 8 inches. Based on the boring performed within the existing concrete roadway (B-3), the depth of stripping will be on the order of about 7 inches. However, the actual stripping depth should be verified and monitored by the geotechnical engineer at the time of construction to ensure adequate removal of all deleterious materials.

Based on our experience with reconstruction on existing sites, soft, wet or disturbed soil conditions are often encountered under existing pavements/concrete/slabs due to leaking utility lines and disturbance of the surficial soils during demolition. Therefore, as previously stated, the depth of stripping required to adequately remove soft or disturbed soils will likely vary and should be determined in the field by the geotechnical engineer at the time of construction. The stripped soil should be wasted or stockpiled for later use in landscaping.

Excavation of root zones associated with tree or brush removal, if required, should continue until all roots greater than ½-inch in diameter are removed. Deep excavations required for root zone over-excavation should be backfilled with adequately compacted structural fill meeting the material and compaction requirements provided herein.

The upper soils encountered in the borings are expected to be somewhat moisture sensitive and if wet at the time of construction these materials may be soft and unstable. If construction occurs during wet weather it may be necessary to further undercut and replace or chemically treat the surficial soils with lime. If lime treatment is desirable, SITE Engineering, Inc. should be contacted to provide further recommendations.

Upon stripping and excavation to the proposed subgrade level and prior to placement of any required structural fill, the exposed soils in the proposed construction area should be proofrolled with a partially loaded tandem axle dump truck or similar heavy rubber-tired vehicle weighing approximately 12 to 15 tons. Soils which are observed to rut or deflect excessively under the moving load should be further undercut and replaced with properly compacted structural fill or be chemically stabilized. The proofrolling, undercutting and filling, and/or chemical stabilization activities should be witnessed by a representative of the geotechnical engineer and should be performed during a period of dry weather.

After stripping and proofrolling as described above, the placement of structural fill, if necessary to establish design grade, may begin. Structural fill should be placed in relatively uniform horizontal lifts and be adequately keyed into the stripped and scarified subgrade soils. Structural fill soils should be free of organic or other deleterious materials, have a maximum particle size less than 2 inches, have a liquid limit of 42 or less, a plasticity index between 10 and 22, and classify as CL in accordance with the Unified Soil Classification System (ASTM D-2487). Silts and silty-clays (soils which classify as ML or CL-ML) are not recommended for use as structural fill due to their moisture sensitive nature.

All structural fill within the proposed construction areas and for a distance of at least 5 feet beyond the perimeter of the structures should be compacted to at least 95 percent of standard Proctor maximum dry density as determined by ASTM Designation D-698. Structural fill should be placed in maximum lifts of 8 to 9 inches of loose material and should be compacted within the range of one (1) percentage point below to three (3) percentage points above the optimum moisture content value.

Close moisture content control will be required to achieve the recommended degree of compaction. If water must be added, it should be uniformly applied and thoroughly mixed into the soil by disking or scarifying. Each lift of compacted structural fill should be tested by a qualified geotechnical engineer or his representative prior to placement of subsequent lifts. After adequate compaction of each lift has been verified, light scarification of the surface of the lift should be performed prior to placement of additional fill to ensure an adequate bond between lifts. The edges of compacted structural fill should extend at least 5 feet beyond the edges of the building prior to sloping. Care should be taken to apply compactive effort throughout the structural fill and structural fill slope areas.

We also recommend that water not be allowed to collect in the foundation excavations, floor slab areas, or on prepared subgrades of the construction area either during or after construction. Undercut or excavated areas should be sloped toward one corner to facilitate removal of any collected rainwater, groundwater or surface runoff. Positive site surface drainage should be provided to reduce infiltration of surface water around the perimeter of the structure and beneath the floor slab and foundation elements.

4.3 Shallow Foundation Recommendations

Provided the site preparation recommendations given in this report are followed, the planned structures may be supported on relatively shallow foundation systems bearing at a minimum depth of 2 feet below final grade. Foundation elements bearing on existing naturally occurring lean clay soils or within properly compacted imported structural fill at the recommended depth can be proportioned utilizing a maximum net allowable soil bearing pressure of 1,400 pounds per square foot for both isolated spread footings and continuous (wall) footings.

The foundation excavations should be observed by a representative of SITE Engineering, Inc. prior to placement of reinforcing steel or concrete to assure that the foundation soils are consistent with the materials discussed in this report. Soft or loose soil zones encountered at the bottom of the footing excavations should be removed to the level of suitable bearing material and replaced with adequately compacted structural fill as directed by the Geotechnical Engineer. After opening, the footing excavations should be observed and concrete placed as quickly as possible to avoid exposure of the footing bottoms to wetting and/or drying. Surface run-off water should be drained away from the excavations and not be allowed to pond. If it is required that footing excavations be left open for more than one day, they should be protected to reduce evaporation or entry of moisture.

4.4 Settlement of Shallow Foundation System

Consolidation of the soils resulting from the foundation loads will result in measurable but tolerable increments of soil settlements. Based on the results of field and laboratory tests, and considering the anticipated foundation loads, it is estimated that settlement of square footings or thickened slab sections up to 5 feet by 5 feet in dimension and continuous footings up to 3 feet in width will be on the order of one (1) inch or less. Differential settlement across each foundation area will probably approximate 50 percent of the total realized settlement.

The settlements provided above are estimates. Values were derived from empirical equations using average soil characteristics from laboratory testing performed on samples of the subsurface soils of the borings performed at this site. Therefore, it is anticipated that settlements throughout the structures may vary. The estimated settlements are based on a maximum of 12 inches of fill being placed above existing grade. If more fill is required to reach design elevation, settlement due to the weight of the fill will need to be considered as it may be excessive.

Settlements of the magnitude discussed are generally considered moderate for structures of the type proposed. Therefore, it is highly recommended that the design of masonry walls include provisions for liberally spaced, vertical control joints to minimize the effects of cosmetic “cracking”.

4.5 Uplift Resistance of Shallow Foundation Elements

Uplift resistance of shallow footings will be limited to the weight of the foundation concrete and the soil above the extensions of spread footings. For design purposes, the ultimate uplift resistance should be based on unit weights of 140 pcf for the concrete in the footings and 115 pcf for the soil above the spread footings. A factor of safety of at least 1.1 should be applied to the calculated uplift resistance to account for potential variations in the concrete and soil unit weights. The size and depth of foundation should be checked by the structural engineer to assure that it is capable of supporting the uplift forces.

4.6 Other Foundation Types

It should be noted that foundation types other than those discussed in this report could be used for support of the structures at this site. These foundation systems include but are not limited to auger cast-in-place piles, driven piles of various materials, and screwed helical piles. Ground improvement techniques such as rigid inclusions or aggregate piers (stone columns) may also offer an increase in bearing capacity while minimizing settlements without the expense of a typical deep foundation system. Some of these foundation types and ground improvement systems are patented and should be designed by the manufacturer or distributor. SITE Engineering, Inc. can provide recommendations for ground improvement methods and/or alternative foundation options at your request.

5.0 PAVEMENT RECOMMENDATIONS

It is understood that a portion of Hebrard Boulevard will be reconstructed utilizing pavers. The pavers will be placed over a concrete section capable of supporting the traffic loads. As previously mentioned, traffic loading information including the types of vehicles and frequencies has not been provided at this time. For purposes of our analysis, an average daily traffic (ADT) of 1,500 vehicles has been assumed. Furthermore, a 20 year design period was utilized. The following table provides our ESAL calculations for a 20 year design period based on a typical traffic mix for this class of roadway:

Vehicle Class/Type	Percent of ADT (%)	Average Initial Truck Factor (ESAL's/vehicle)	Accumulated 18-kip ESAL's for 20-year Design Life
1 – Motorcycles	2	0.0004	88
2 – Passenger Cars	78	0.0004	3,416
3 – 2A-4T Unit	10	0.0162	17,739
4 – Buses	3	0.1779	58,440
5 - 2A-6T Single Unit	2	0.1779	38,960
6 – 3A Single Unit	2	0.5745	125,816
7 – 4A Single Unit	2	0.5745	125,816
8 – 4A Single Trailer	0.25	0.9945	27,224
9 – 5A Single Trailer	0.25	1.7102	46,817
10 – 6A Single Trailer	0.25	2.873	78,648
13 – 7A Multi-Trailer	0.25	1.84	50,370
Totals	**100.00**	**--**	**573,334**

Grading information for the proposed pavement area is also unknown at this time. However, for purposes of this report, we have assumed that less than about 12 inches of cut and/or fill will be required in the proposed pavement areas to reach design elevation. We have further assumed that the site preparation criteria presented in this report will be followed and all existing pavement areas or other infrastructure, topsoil, organic debris, and any isolated soft or loose soil areas encountered during proofrolling of the exposed subgrade will be removed and replaced with compacted structural fill as previously described. Therefore, it is estimated the subgrade soils will be prepared to achieve a minimum CBR of 3 or a modulus of subgrade reaction (k) of 75 pci.

The general pavement design information presented in this report is based on information published by AASHTO and the Portland Cement Association as well as past experience in this area. The published information was utilized in conjunction with the available field and laboratory test data to develop general pavement recommendations.

Although extensive evaluation, including California Bearing Ratio (CBR) testing of the near surface soils or potential sources of imported structural fill was not performed, a CBR value of 3.0 and a modulus of subgrade reaction, k, of 75 psi/inch for the adequately stripped and proofrolled naturally occurring soils or compacted structural fill were used for the design of the pavement sections. Therefore, it is assumed that the site preparation criteria presented in the report will be followed and all topsoil and any isolated soft or loose areas encountered during proofrolling of the subgrade will be removed and replaced with compacted fill or stabilized as previously discussed. Specific design parameters considered in the pavement analyses are as follows:

CBR	3.0
Modulus of Subgrade Reaction, k	75 pci
Reliability	90%
Overall Deviation	0.30
Initial Serviceability	4.5
Terminal Serviceability	2.5
Concrete Modulus of Rupture	600 psi
Modulus of Elasticity	4.2×10^6 psi
Load Transfer	3.2 Dowels or Keys
Drainage Coefficient	1.0
Design Life	20 years

PORTLAND CEMENT CONCRETE PAVEMENT	
Pavement Materials	**Thickness (inches)**
Portland Cement Concrete *(LCG Spec – Section 601)*	7
Proofrolled Subgrade or Adequately Compacted Soil	--
ESTIMATED PROVIDED ESAL'S	***≈695,000***

Pavements, embankment soils, and subgrade layer construction should meet the applicable sections and requirements of the *Lafayette Consolidated Government Standard Specifications for Road, Drainage, Bridges and Other Infrastructure* (LCG Specs) 2016 Edition. Soils should be compacted to a minimum of 95 percent of the maximum dry density as determined by TR-418.

Proper finishing of concrete pavement requires the use of appropriate construction joints to reduce the potential for cracking. Construction joints should be designed in accordance with current LCG, Portland Cement Association and the American Concrete Institute guidelines. Joints should be sealed to reduce the entry of water and subsequent infiltration into the supporting soils. Load transfer devices at the pavement joints should be designed in accordance with accepted codes. The concrete should meet the requirements of Section 901 of the LCG Specs and be designed with 5±2 percent entrained air to improve workability and durability.

It should be noted that alternative pavement sections can potentially be utilized on this specific project. However, pavement alternatives will require base layers consisting of limestone and/or chemically stabilized/treated soils. Based on the limited construction area, it was assumed these alternatives will likely not be cost effective, and therefore were not provided. SITE Engineering, Inc. can provide recommendations for alternative which include various base course options at your request.

It is recommended that all utility pipe excavations and subsequent backfilling operations undertaken within the proposed pavement areas and for a distance of 2 feet within the perimeter of the pavement system be accomplished in accordance with LCG and/or governing municipality requirements. Where utility excavations traverse the pavement system, the upper 12 inches of utility trench backfill should consist of structural fill soils and/or the required pavement base materials meeting the classification requirements provided within this report.

In addition, water should not be allowed to pond behind curbs and saturate the pavement base. In down grade areas, granular base should extend through the slope to allow any water entering the base a path to exit. It is further recommended that subgrade, embankment soil, and/or the lime or cement treated base (if used) be sloped away from the centerline to facilitate drainage of any surface water that may infiltrate the pavement joints and aggregate base. Weep holes should be installed/constructed in stormwater drainage catch basins at the bottom of the granular base elevation to provide an exit path for any water that may enter the aggregate base both during and after construction.

6.0 CONSTRUCTION CONSIDERATIONS

6.1 Construction Testing and Inspection

Many problems can be avoided or solved in the field if proper inspection and testing services are provided. It is recommended that the site preparation, foundation and floor slab construction, and pavement area construction be monitored by the geotechnical engineer or his representative.

Density tests should be performed to verify compaction and moisture content in the fill and base material. Each lift of fill material should be tested and approved by the soils engineer prior to placement of subsequent lifts. As a guideline, it is recommended that field density tests be performed at a frequency of not less than one test per 2,500 and 5,000 square feet of surface area per lift in the building and pavement areas, respectively, with a minimum of three tests per lift.

Inspection should be performed prior to and during concrete placement. Foundation excavations should be observed by the soils engineer or his representative to verify that the exposed materials are suitable for support of the foundations and/or pavements.

It is recommended that SITE Engineering, Inc. be retained to provide observation and testing of construction activities involved in the foundations and pavements, earthwork, and related activities of this project. SITE Engineering, Inc. cannot accept any responsibility for any conditions which deviated from those described in this report, nor for the performance of the foundations and pavements if not engaged to also provide construction observation and testing for this project.

6.2 Moisture Sensitive Soils/Weather Related Concerns

The near surface soils encountered at this site are considered somewhat sensitive to changes in moisture content and may lose strength if allowed to become wet. During wet weather periods, increases in the moisture content of the soil may cause significant reduction in the soil strength and support capabilities. In addition, soils that become wet may be slow to dry and thus significantly retard the progress of grading and compaction activities.

It will, therefore, be advantageous to perform earthwork and foundation construction activities during dry weather. If the upper soils are allowed to become saturated and the construction schedule does not allow for drying of the soils naturally, then removal and replacement or chemical treatment as discussed earlier in this report will likely be required.

6.3 Drainage and Groundwater Concerns

Water should not be allowed to collect in the foundation excavations, floor slab areas, or on prepared subgrades of the construction area either during or after construction. Undercut or excavated areas should be sloped toward one corner to facilitate removal of any collected rainwater, groundwater, or surface runoff. Positive site surface drainage should be provided to reduce infiltration of surface water around the perimeter of the building and beneath the floor slab.

Groundwater was encountered during the drilling operations at a depth of 15 feet below the existing ground surface within the building borings. It may take several days for the groundwater level to become static in an open borehole. Therefore, it should be noted, that it is possible for a groundwater table to fluctuate depending upon climatic and rainfall conditions. We recommend that the Contractor determine the actual groundwater levels at the site at the time of the construction activities.

It is recommended that the site be graded in anticipation of wet weather periods to help prevent water from “ponding” within the construction areas and/or flowing into excavations. Filtered sump pumps placed in the bottoms of excavations, or other conventional dewatering techniques, such as drainage swales or other methods approved by the geotechnical engineer, are expected to be suitable for control of surface or runoff water. However, if uncontrollable groundwater infiltration into the excavations is experienced during construction, SITE Engineering should be contacted.

6.4 Excavations

In Federal Register, Volume 54, No. 209 (October 1989), the United States Department of Labor, Occupational Safety and Health Administration (OSHA) amended its "Construction Standards for Excavations, 29 CFR, part 1926, Subpart P". This document was issued to better insure the safety of workmen entering trenches or excavations. It is mandated by this federal regulation that excavations, whether they be utility trenches, basement excavation or footing excavations, be constructed in accordance with the new OSHA guidelines. It is our understanding that these regulations are being strictly enforced and if they are not closely followed, the owner and the contractor could be liable for substantial penalties.

The contractor is solely responsible for designing and constructing stable, temporary excavations and should shore, slope, or bench the sides of the excavations as required to maintain stability of both the excavation sides and bottom. The contractor's "responsible person", as defined in 29 CFR Part 1926, should evaluate the soil exposed in the excavations as part of the contractor's safety procedures. In no case should slope height, slope inclination, or excavation depth, including utility trench excavation depth, exceed those specified in local, state, and federal safety regulations.

We are providing this information solely as a service to our client. SITE Engineering, Inc. does not assume responsibility for construction site safety or the contractor's or other parties’ compliance with local, state, and federal safety or other regulations.

7.0 REPORT LIMITATIONS

The recommendations submitted, in this report, are based on the available subsurface information obtained by SITE Engineering for the proposed project. If there are any revisions to the plans for this project, or if deviations from the subsurface conditions noted in this report are encountered during construction, SITE Engineering should be notified immediately to determine if changes in the recommendations are required. If we are not notified of such changes or conditions, SITE Engineering will not be responsible for the impact of those changes or conditions on the project.

The geotechnical engineer warrants that the findings, recommendations, specifications, or professional advice contained herein have been made in accordance with generally accepted professional geotechnical engineering practices in the local area. No other warranties are implied or expressed.

After the plans and specifications are more complete, the geotechnical engineer should be retained and provided the opportunity to review the final design plans and specifications to check that our engineering recommendations have been properly incorporated into the design documents. At that time, it may be necessary to submit supplemental recommendations. This report has been prepared for the exclusive use of the University of Louisiana at Lafayette or their assigns for the specific application to the proposed Moody Hall Plaza renovations to be constructed at the referenced location in Lafayette, Louisiana.

APPENDIX

Boring Location Diagram

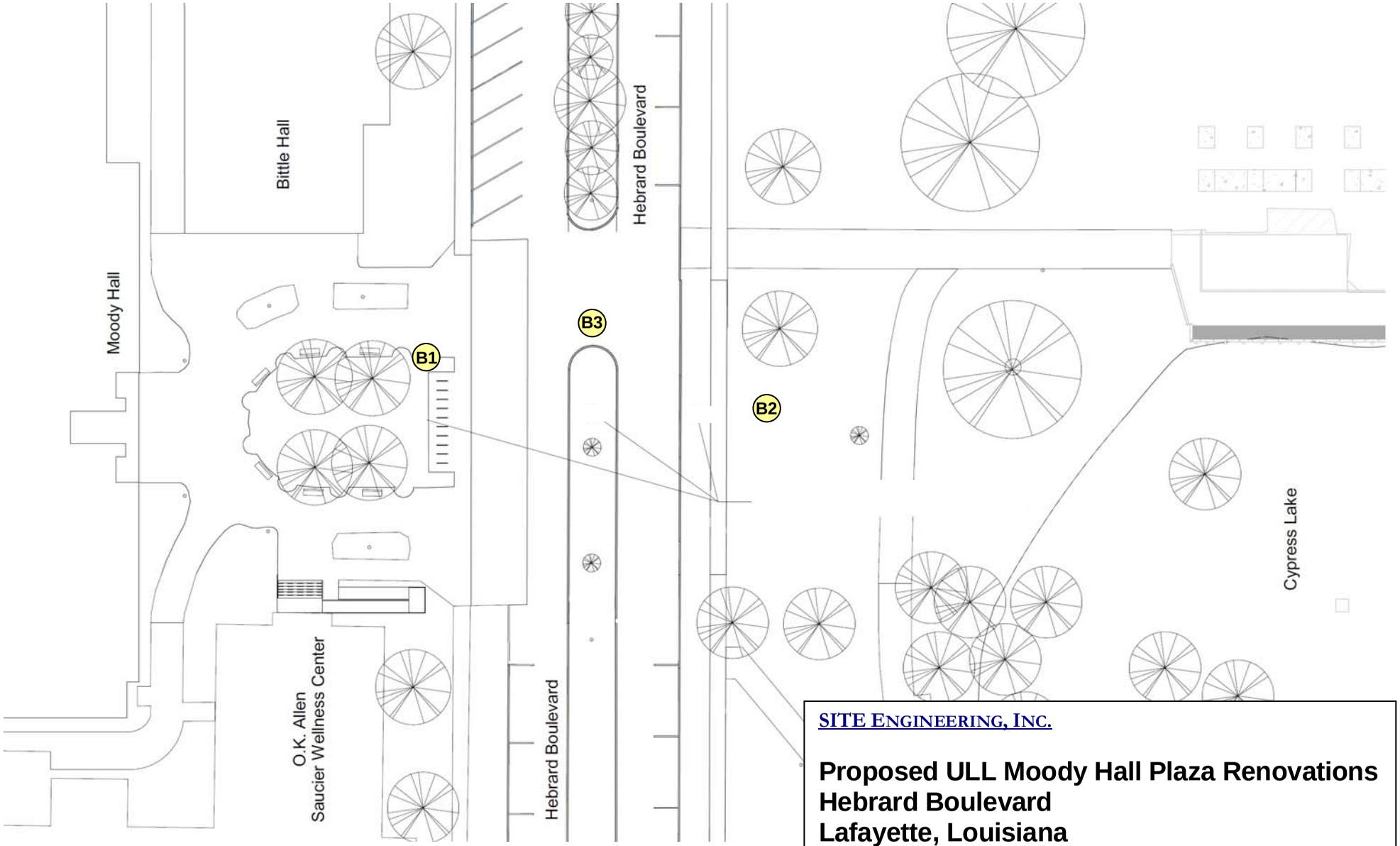

SITE ENGINEERING, INC.

Proposed ULL Moody Hall Plaza Renovations
Hebrard Boulevard
Lafayette, Louisiana

Project #19-G052-01
Date: July 10, 2019

(#) = Approximate Boring Location

KEY TO TERMS AND SYMBOLS USED ON LOGS

SOIL TYPE

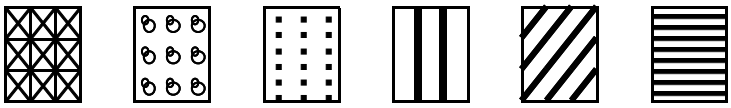

ROCK GRAVEL SAND SILT CLAY PEAT

SAMPLE TYPE

NO SAMPLE | AUGER SAMPLE | SHELBY TUBE | SPLIT SPOON

MODIFIERS

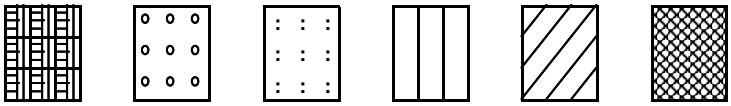

STONE or CONCRETE | GRAVELY | SANDY | SILTY | CLAYEY | FILL or TOPSOIL

NO RECOVERY | ROCK CORE | 2" SHELBY TUBE | TXDOT CONE

UNIFIED SOIL CLASSIFICATION SYSTEM - ASTM D 2487-98

MAJOR DIVISIONS			LETTER SYMBOL	TYPICAL DESCRIPTIONS
COARSE GRAINED SOILS (LESS THAN 50% PASSING NO. 200 SIEVE)	GRAVEL & GRAVELY SOILS LESS THAN 50% PASSING NO. 4 SIEVE	CLEAN GRAVEL (LITTLE OR NO FINES	GW	WELL GRADED GRAVEL, GRAVEL-SAND MIXTURES WITH LITTLE OR NO FINES
			GP	POORLY GRADED GRAVEL, GRAVEL-SAND MIXTURES WITH LITTLE OR NO FINES
		W/ APPRECIA BLE FINES	GM	SILTY GRAVEL, GRAVEL-SAND-SILT MIXTURES
			GC	CLAYEY GRAVELS, GRAVEL-SAND-CLAY MIXTURES
	SANDS MORE THAN 50% PASSING NO. 4 SIEVE	CLEAN SANDS LITTLE FINES	SW	WELL GRADED SAND, GRAVELY SAND (LITTLE FINES)
			SP	POORLY GRADED SANDS, GRAVELY SAND (L.FINES)
		SANDS WITH APPREA. FINES	SM	SILTY SANDS, SAND-SILT MIXTURES
			SC	CLAYEY SANDS,SAND-CLAY MIXTURES
FINE GRAINED SOILS (MORE THAN 50% PASSING NO. 200 SIEVE)	SILTS AND CLAYS LIQUID LIMIT LESS THAN 50		ML	INORGANIC SILTS & VERY FINE SANDS,ROCK FLOUR SILTY OR CLAYEY FINE SANDS OR CLAYEY SILT W/ LOW PI
			CL	INORGANIC CLAY OF LOW TO MEDIUM PI LEAN CLAY GRAVELY CLAYS, SANDY CLAYS, SILTY CLAYS
			OL	ORGANIC SILTS & ORGANIC SILTY CLAYS OF LOW PI
	SILTS AND CLAYS LIQUID LIMIT GREATER THAN 50		MH	INORGANIC SILTS, MICACEOUS OR DIATOMACEOUS FINE SANDY OR SILTY SOILS, ELASTIC SILTS
			CH	INORGANIC CLAYS OF HIGH PLASTICITY FAT CLAYS
			OH	ORGANIC CLAYS OF MED TO HIGH PI, ORGANIC SILT
HIGHLY ORGANIC SOIL			PT	PEAT AND OTHER HIGHLY ORGANIC SOILS
UNCLASSIFIED FILL MATERIALS			ARTIFICIALLY DEPOSITED AND OTHER UNCLASSIFIED SOILS AND MAN-MADE SOIL MIXTURES	

CONSISTENCY OF COHESIVE SOILS

CONSISTENCY	UNCONFINED COMPRESSIVE STRENGTH IN TONS/FT^2
VERY SOFT	0.0 TO 0.25
SOFT	0.25 TO 0.50
FIRM	0.50 TO 1.0
STIFF	1.0 TO 2.0
VERY STIFF	2.0 TO 4.0
HARD	> 4.0 OR 4.0+

RELATIVE DENSITY - GRANULAR SOILS

CONSISTENCY	N-VALUE (BLOWS/FOOT)
VERY LOOSE	0-4
LOOSE	4-9
MEDIUM DENSE	10-29
DENSE	30-49
VERY DENSE	> 50 OR 50+

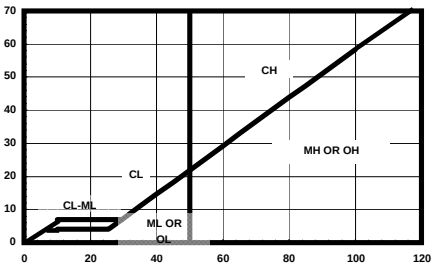

ABBREVIATIONS

Qp - HAND PENETROMETER
Qt - TORVANE
MV - MINIATURE VANE
Qu - UNCONFINED COMPRESSION TEST
UU - UNCONSOLIDATED UNDRAINED TRAIXIAL
CU - CONSOLIDATED UNDRAINED

▼ GROUNDWATER FIRST ENCOUNTERED

∇ (? HRS) DELAYED GROUNDWATER READING W/ ELAPSED TIME

CLASSIFICATION OF GRANULAR SOILS

U.S. STANDARD SIEVE SIZE(S)

6" 3" 3/4" 4 10 40 200

BOUL--DERS	COBBLES	GRAVEL		SAND			SILT OR CLAY	CLAY
		COARSE	FINE	COARSE	MEDIUM	FINE		

152 76.2 19.1 4.76 2.0 0.42 0.074 0.002

GRAIN SIZE IN MM

SITE Engineering, Inc.

LOG OF BORING B-1

Proposed Moody Hall Plaza Renovations

University of Louisiana at Lafayette

Lafayette, Louisiana

TYPE OF BORING: Solid Flight Auger

SITE Project #: 19-G052

DEPTH, FT.	SOIL TYPE	SAMPLE TYPE	SOIL DESCRIPTION **SURFACE ELEVATION:** Existing Grade	N-VALUE, blows per foot	UNCONFINED COMPRESSIVE STRENGTH (Qu), tsf	HAND PENETROMETER (Qp), tsf	TORVANE (Qt), tsf	UNIT DRY WEIGHT pcf	MOISTURE CONTENT, %	LIQUID LIMIT	PLASTICITY INDEX	% PASSING #200 SIEVE
			6" Silty Clay topsoil / Very stiff brown lean CLAY (CL)			4.5+			13			
			Very stiff brown fat CLAY (CH) with trace organics		3.49	4.5+		95	26	59	36	
			Very stiff to stiff brown and gray lean CLAY (CL) with silt and ferrous nodules		2.47	4.0		99	24			
5					1.80	2.5		98	25	42	19	
			- wood fragments from 6 to 8 feet			1.5			28			
			Soft brown lean CLAY (CL) with silt									
10					0.41		0.20	89	30			
			Stiff light brown and gray fat CLAY (CH) with ferrous nodules									
15			▼		1.70	2.0		95	28			
20						2.5			32			
25												
30												
35												
40												
45												
50												

DEPTH OF BORING: 20 Feet Below Existing Grade

DEPTH TO GROUNDWATER: 15 Feet Below Existing Grade

DATE OF BORING: June 18, 2019

SITE Engineering, Inc.

LOG OF BORING B-2

Proposed Moody Hall Plaza Renovations

University of Louisiana at Lafayette

Lafayette, Louisiana

TYPE OF BORING: Solid Flight Auger

SITE Project #: 19-G052

DEPTH, FT.	SOIL TYPE	SAMPLE TYPE	SOIL DESCRIPTION **SURFACE ELEVATION:** Existing Grade	N-VALUE, blows per foot	UNCONFINED COMPRESSIVE STRENGTH (Qu), tsf	HAND PENETROMETER (Qp), tsf	TORVANE (Qt), tsf	UNIT DRY WEIGHT pcf	MOISTURE CONTENT, %	LIQUID LIMIT	PLASTICITY INDEX	% PASSING #200 SIEVE
			8" Lean Clay topsoil / Very stiff light brown fat CLAY (CH)			4.5+			17			
			Stiff brown lean CLAY (CL) with silt and sand			2.5			18			71
			Stiff gray and brown lean CLAY (CL) with silt									
					1.28	2.0		93	28	47	24	
5												
						1.5			28			
			Soft brown lean CLAY (CL) with silt and ferrous nodules									
					0.40		0.20	90	29	35	15	
10					0.30		0.20	87	31			
			Stiff light brown fat CLAY (CH) with ferrous nodules									
15			▼		1.98	3.0		97	26			
20					1.01	1.5		89	30			
			Boring terminated at 20 feet below grade									
25												
30												
35												
40												
45												
50												

DEPTH OF BORING: 20 Feet Below Existing Grade

DEPTH TO GROUNDWATER: 15 Feet Below Existing Grade

DATE OF BORING: June 18, 2019

SITE Engineering, Inc.

LOG OF BORING B-3

Proposed Moody Hall Plaza Renovations

University of Louisiana at Lafayette

Lafayette, Louisiana

TYPE OF BORING: Hand Auger

SITE Project #: 19-G052

DEPTH, FT.	SOIL TYPE	SAMPLE TYPE	SOIL DESCRIPTION **SURFACE ELEVATION:** Existing Grade	N-VALUE, blows per foot	UNCONFINED COMPRESSIVE STRENGTH (Qu), tsf	HAND PENETROMETER (Qp), tsf	TORVANE (Qt), tsf	UNIT DRY WEIGHT pcf	MOISTURE CONTENT, %	LIQUID LIMIT	PLASTICITY INDEX	% PASSING #200 SIEVE
			6¾" Concrete / Brown and gray lean CLAY (CL) with silt						24			
									28	47	24	
									29			
									30			
5									29			
			Boring terminated at 5 feet below grade									
10												
15												
20												
25												
30												
35												
40												
45												
50												

DEPTH OF BORING: 5 Feet Below Existing Grade

DEPTH TO GROUNDWATER: Not Encountered During Drilling

DATE OF BORING: June 18, 2019

SITE Engineering, Inc.

Section 01 10 00 - Summary

PART 1 - GENERAL

1.1 RELATED DOCUMENTS

A. Drawings and general provisions of Contract, including General and Supplementary Conditions and other Division 01 Specification Sections, apply to this Section.

1.2 PROJECT INFORMATION

A. The Project consists of furnishing all labor and materials including performance of all work for the removal of existing site features to allow for the construction of improvement to the intersection of Hebrard Boulevard between Moody Hall and the University Student Union Plaza on the opposite of Hebrard Boulevard at the University of Louisiana at Lafayette. Components to be incorporated in the work include, but are not limited to, walkways, pavers, pavers, site amenities, concrete paving,, and site drainage.

B. The Work of this Project is shown more completely on the Drawings and Project Manual dated April 1, 2020.

C. Architect: Architects Southwest, A Professional Corporation, Lafayette, Louisiana.

D. Architect's Consultants:

1. Civil: Ronkartz and Oestricher, A Professional Engineering Corporation, 1919B Dulles Dr., Lafayette, LA.

E. Contractor shall minimize any disruption to the greatest extent possible to any of the operations of the campus as well as keeping the areas reasonably clear and clean during the duration of this Project's work efforts.

F. All trash and debris shall be removed from the site area on a daily basis and placed in appropriate dumpsters.

1.3 TYPE OF CONTRACT

A. The Work will be constructed under a single prime contract where the basis of payment is a stipulated sum.

1.4 OWNER'S OCCUPANCY REQUIREMENTS

A. Full Owner Occupancy: Owner will occupy the surrounding premises, including existing adjacent buildings during entire construction period, with the exception of areas under construction. Cooperate with Owner during construction operations to minimize conflicts and facilitate Owner usage. Perform the Work so as not to interfere with Owner's operations. Maintain existing exits free and clear, unless otherwise indicated.

1. Maintain access to existing sidewalks surrounding the construction area and other adjacent occupied or used facilities. Do not close or obstruct walkways, corridors, or other occupied or used facilities without written permission from Owner and authorities having jurisdiction. Maintain clear path of travel from all adjacent buildings and any exterior exits that may face the Construction site.

a. Provide not less than 72 hours' notice to Owner of activities that will affect Owner's operations.

1.5 ACCESS TO SITE

A. Confine operations to areas within Contract limits as indicated on the Drawings. Portions of the site beyond areas in which construction operations are indicated are not to be disturbed. Allow for Owner's occupancy and use by the public of adjacent facilities and parking areas.

1. Restrict the access of all persons entering upon the property in connection with the Work to the access route and to the actual areas of the Work.

2. Driveways and Entrances: Keep driveways and entrances serving the adjacent facilities and the premises clear and available to the Owner's employees and the public at all times. Do not use these areas for parking or storage or materials.

a. Schedule deliveries to minimize space and time requirements for storage of materials and equipment on site.

B. Repair or replace any damage to existing lawns, ditches, concrete sidewalks, gutters, fencing, or any other structures damaged by construction operations as evidenced by review of pre-construction site survey.

C. The Owner shall designate area(s) for parking of Contractor's vehicles and for construction materials staging.

D. Construction operations shall not cause any obstruction to the free flow of traffic on adjacent streets without the prior authority of the University Physical Plant, University Police, as well as the City of Lafayette Traffic Division.

E. Condition of Existing Adjacent Buildings: Maintain existing building or entrances affected by construction operations inaccessible and weathertight condition throughout construction period. Repair damage caused by construction operations.

F. Toilet Rooms in the existing buildings are not available for use by the Contractor's personnel; use of temporary toilet facilities by the Contractor and his personnel will be required

1.6 WORK RESTRICTIONS

A. Work Restrictions, General: Comply with restrictions on construction operations.

1. Comply with limitations on use of public streets and with other requirements of authorities having jurisdiction.

B. Existing Utility Services: Existing lighting, telephone, water, and other services presently serving existing areas shall remain in use during work of this Contract. Schedule with and secure written approval from Owner for any necessary electrical down-time, or non-use of utility services.

1. Existing electrical and utilities service shall not be interrupted during the current facilities regular operational hours. All work requiring shut-down or interruption of services must be done after regular working hours or by pre-arranged and approved time with Owner. Schedule with and secure written approval from Owner for any necessary service shut-down, or non-use of facilities due to work required under this Contract. Contact Owner a minimum of 72 hours prior to the anticipated date and time of a particular interfering work item.

1.7 MISCELLANEOUS PROVISIONS

A. Drug and Fire Arms Free Zone: The site of the Work is considered a Drug Free and Fire Arms Free Zone.

1. Inform all workers that these restrictions exist and the penalties for any violations of the zone can be extremely severe.

B. Nonsmoking Building: Smoking shall not be permitted within the building or within 25 feet of entrances, operable windows, or outdoor air-intakes at any time during the construction.

1. Inform all workers and post signage to indicate these restrictions.
2. Post signage designating specific areas where smoking will be allowed during the course of this Project.

C. Noise, Vibration, Dust, and Odors During Construction: The noise, vibrations, dust, and odors generated by construction of this Work may at times create a problem for the Owner. The Owner recognizes and can tolerate minimal levels of noise created by a majority of construction activity. Dust generation shall be confined within the specific areas of work to the greatest extent possible.

1. However, the Owner also recognizes that, during certain construction work, the noise level is unusually higher than normal. These higher levels of noise generation may conflict with a specific activity being simultaneously conducted by the Owner.
2. It is required of the Contractor that agreement be secured from the Owner prior to scheduling any such unusually noisy activity if work schedule requires such operations to occur during normal business hours that may conflict with times of scheduled testing periods or University dead days. The Contractor shall cooperate if an on-going activity becomes objectionable by its longevity or overlapping into a program started later by the Owner. It is understood and agreed that both parties will cooperate to the end that neither will be unduly inconvenienced by this requirement.

D. Contractor and Construction Personnel Restrictions: All workers on the site shall not interact with students or faculty.

1. All workers entering the Project site shall not be allowed to wear any apparel with indications of any university other that University of Louisiana at Lafayette.

a. Presence of any university apparel other that University of Louisiana at Lafayette shall be grounds for immediate request to depart the project site

E. Quality Assurance: Promptly upon award of the Contract, notify all pertinent personnel regarding requirements of this Section. Require that all personnel who will be utilized on this Project certify their awareness of and familiarity with the requirements of this Section.

1.8 SPECIFICATION FORMATS AND CONVENTIONS

A. Specification Format: The Specifications are organized into Divisions and Sections using the 49 Division format and CSI/CSC's "MasterFormat" numbering system.

1. Section Identification: The Specifications use Section numbers and titles to help cross-referencing in the Contract Documents. Sections in the Project Manual are in numeric sequence; however, the sequence is incomplete because all available Section numbers are not used. Consult the Table of Contents at the beginning of the Project Manual to determine numbers and names of Sections in the Contract Documents.

B. Specification Content: The Specifications use certain conventions for the style of language and the intended meaning of certain terms, words, and phrases when used in particular situations. These conventions are as follows:

1. Abbreviated Language: Language used in the Specifications and other Contract Documents is abbreviated. Words and meanings shall be interpreted as appropriate. Words implied, but not stated, shall be inferred as the sense requires. Singular words shall be interpreted as plural, and plural words shall be interpreted as singular where applicable as the context of the Contract Documents indicates.
2. Imperative mood and streamlined language are generally used in the Specifications. Requirements expressed in the imperative mood are to be performed by Contractor. Occasionally, the indicative or subjunctive mood may be used in the Section Text for clarity to describe responsibilities that must be fulfilled indirectly by Contractor or by others when so noted.

    a. The words "shall," "shall be," or "shall comply with," depending on the context, are implied where a colon (:) is used within a sentence or phrase.

C. Division 01 General Requirements: Requirements of Sections in Division 01 apply to the Work of all Sections in the Specifications.

D. Drawing Coordination: requirements for materials and products identified on Drawings are described in detail in the Specifications.

1. Terminology: Materials and products are identified by the typical generic terms used in the individual Specification Sections.
2. Keynoting: Materials and products are identified by reference keynotes referencing Specification Section numbers found in this Project Manual.

PART 2 - PRODUCTS (Not applicable).

PART 3 - EXECUTION (Not applicable).

END OF SECTION 01 10 00

Section 01 23 00 - Alternates

PART 1 - GENERAL

1.1 RELATED DOCUMENTS

A. Drawings and general provisions of Contract, including General and Supplementary Conditions and other Division 01 Specification Sections, apply to this Section.

1.2 SUMMARY

A. This Section specifies administrative and procedural requirements for Alternates and Options on the Drawings.

1.3 DEFINITIONS

A. Alternate: An amount proposed by Bidders and stated on the Bid Form for certain construction activities defined in the Bidding Requirements that may be added to or deducted from the Base Bid amount if the Owner decides to accept a corresponding change in either the amount of construction to be completed, or in the products, materials, equipment, systems or installation methods described in Contract Documents.

1. Alternates described in this Section are part of the Work only if enumerated in the Agreement.
2. The cost or credit for each alternate is the net addition to or deduction from the Contract Sum to incorporate alternate into the Work. No other adjustments are made to the Contract Sum.

1.4 PROCEDURES

A. Coordination: Coordinate related Work and modify or adjust adjacent Work as necessary to ensure that Work affected by each accepted Alternate is complete and fully integrated into the project.

1. Include as part of each Alternate, miscellaneous devices, accessory objects and similar items incidental to or required for a complete installation whether or not mentioned as part of the Alternate.

B. Basis of Bid: Bidder must include all alternates shown on the Bid Form; failure to comply may be cause for rejection. No segregated bids or assignments will be considered.

C. Notification: Immediately following the award of the Contract, prepare and distribute to each party involved, notification of the status of each Alternate. Indicate whether Alternates have been accepted, rejected or deferred for consideration at a later date. Include a complete description of negotiated modifications to Alternates.

D. Execute each accepted alternate under the same conditions as other Work of the Contract.

E. Schedule: A "Schedule of Alternates" is included at the end of this Section. Specification Sections referenced in the Schedule contain requirements for materials and methods necessary to achieve the Work described under each Alternate.

PART 2 - PRODUCTS (Not Applicable).

PART 3 - EXECUTION

3.1 SCHEDULE OF ALTERNATES

A. **Alternate Number One – Water Line Relocation**: If this Alternate is accepted, add the work indicated on the Drawings, Sheet C1.1H to offset the 10-inch water line crossing Hebrard Boulevard.

1. If this work is required it will be necessary to reroute the water line, provide any necessary taps and connections, and include a six-inch gate valve and associated valve box as per LUS requirements. Comply with requirements as specified in Project Manual Section 33 00 00 which by reference incorporates the 2012 Edition of the LCG Department of Public Works "Standard Specifications for Roads, Drainage, and Bridges, and Other Infrastructure Improvements and in particular Section 741-A' Water Distribution System," and Section 741-B "Fire Hydrants, Services, and Valves.

   a. The Base Bid shall include the excavation and field verification of the invert elevations and confirmation of the routing of the water line to determine if a conflict will exist and the Work of this Alternate Work will be required.
   b. The Base Bid shall also include the necessary replacement of excavations with structural backfill material properly compacted (or fillcrete at Contractor's option) to support the pavement sections above in the event that the water lien relocation is deemed as not being required.

END OF SECTION 01 23 00

Section 01 25 00 - Substitution Procedures

PART 1 - GENERAL

1.1 RELATED DOCUMENTS

A. Drawings and general provisions of the Contract, including General and Supplementary Conditions and other Division 01 Specification Sections, apply to this Section.

1.2 SUMMARY

A. Section includes administrative and procedural requirements for substitutions.
B. Related Requirements:

1. Section 01 60 00 "Product Requirements" for requirements for submitting comparable product submittals for products by listed manufacturers.

1.3 DEFINITIONS

A. Substitutions: Changes in products, materials, equipment, and methods of construction from those required by the Contract Documents and proposed by Contractor.

1. Substitutions for Cause: Changes proposed by Contractor that are required due to changed Project conditions, such as unavailability of product, regulatory changes, or unavailability of required warranty terms.
2. Substitutions for Convenience: Changes proposed by Contractor or Owner that are not required in order to meet other Project requirements but may offer advantage to Contractor or Owner.

1.4 ACTION SUBMITTALS

A. Substitution Requests: Submit three copies of each request for consideration. Identify product or fabrication or installation method to be replaced. Include Specification Section number, title, and Drawing numbers and titles.

1. Documentation: Show compliance with requirements for substitutions and the following, as applicable:

a. Statement indicating why specified product, fabrication, or installation cannot be provided, if applicable.
b. Coordination information, including a list of changes or revisions needed to other parts of the Work and to construction performed by Owner and separate contractors, that will be necessary to accommodate proposed substitution.

c. Detailed comparison of significant qualities of proposed substitution with those of the Work specified. Include annotated copy of applicable Specification Section. Significant qualities may include attributes such as performance, weight, size, durability, visual effect, sustainable design characteristics, warranties, and specific features and requirements indicated. Indicate deviations, if any, from the Work specified.

d. Product Data, including drawings and descriptions of products and fabrication and installation procedures.

e. Samples, where applicable or requested.

f. Certificates and qualification data, where applicable or requested.

g. List of similar installations for completed projects with project names and addresses and names and addresses of architects and owners.

h. Material test reports from a qualified testing agency indicating and interpreting test results for compliance with requirements indicated.

i. Research reports evidencing compliance with building code in effect for Project, from ICC-ES.

j. Detailed comparison of Contractor's construction schedule using proposed substitution with products specified for the Work, including effect on the overall Contract Time. If specified product or method of construction cannot be provided within the Contract Time, include letter from manufacturer, on manufacturer's letterhead, stating date of receipt of purchase order, lack of availability, or delays in delivery.

k. Cost information, including a proposal of change, if any, in the Contract Sum.

l. Contractor's certification that proposed substitution complies with requirements in the Contract Documents except as indicated in substitution request, is compatible with related materials, and is appropriate for applications indicated.

m. Contractor's waiver of rights to additional payment or time that may subsequently become necessary because of failure of proposed substitution to produce indicated results.

2. Architect's Action: If necessary, Architect will request additional information or documentation for evaluation within seven days of receipt of a request for substitution. Architect will notify Contractor of acceptance or rejection of proposed substitution within 15 days of receipt of request, or seven days of receipt of additional information or documentation, whichever is later.

a. Forms of Acceptance: Change Order, Construction Change Directive, or Architect's Supplemental Instructions for minor changes in the Work.

b. Use product specified if Architect does not issue a decision on use of a proposed substitution within time allocated.

1.5 QUALITY ASSURANCE

A. Compatibility of Substitutions: Investigate and document compatibility of proposed substitution with related products and materials. Engage a qualified testing agency to perform compatibility tests recommended by manufacturers.

1.6 PROCEDURES

A. Coordination: Revise or adjust affected work as necessary to integrate work of the approved substitutions.

PART 2 - PRODUCTS

2.1 SUBSTITUTIONS

A. Substitutions for Cause: Submit requests for substitution immediately on discovery of need for change, but not later than 15 days prior to time required for preparation and review of related submittals.

1. Conditions: Architect will consider Contractor's request for substitution when the following conditions are satisfied. If the following conditions are not satisfied, Architect will return requests without action, except to record noncompliance with these requirements:

a. Requested substitution is consistent with the Contract Documents and will produce indicated results.
b. Substitution request is fully documented and properly submitted.
c. Requested substitution will not adversely affect Contractor's construction schedule.
d. Requested substitution has received necessary approvals of authorities having jurisdiction.
e. Requested substitution is compatible with other portions of the Work.
f. Requested substitution has been coordinated with other portions of the Work.
g. Requested substitution provides specified warranty.
h. If requested substitution involves more than one contractor, requested substitution has been coordinated with other portions of the Work, is uniform and consistent, is compatible with other products, and is acceptable to all contractors involved.

B. Substitutions for Convenience: Not allowed.

PART 3 - EXECUTION (Not Used)

END OF SECTION 01 25 00

Section 01 26 00 - Contract Modification Procedures

PART 1 - GENERAL

1.1 RELATED DOCUMENTS

A. Drawings and general provisions of Contract, including General and Supplementary Conditions and other Division 01 Specification sections, apply to this section.

1.2 SUMMARY

A. This section specifies administrative and procedural requirements for handling and processing Contract modifications.

1.3 MINOR CHANGES IN THE WORK:

A. The Architect will issue supplemental instructions authorizing minor changes in the Work, not involving an adjustment to the Contract Sum or Contract Time, on AIA Form G 710, Architect's Supplemental Instructions.

1.4 PROPOSAL REQUESTS

A. Owner-Initiated Proposal Requests: Proposed changes in the Work that will require adjustment to the Contract Sum or Contract Time will be issued by the Architect with a detailed description of the proposed change and supplemental or revised Drawings and Specifications, if necessary.

1. Proposal Requests issued by the Architect are for information only. Do not consider them an instruction either to stop work in progress, or to execute the proposed change.
2. Unless otherwise indicated in the Proposal Request, within 14 days of receipt of the Proposal Request, submit to the Architect for the Owner's review a quotation estimating costs necessary to execute the proposed change.

a. Include a list of quantities of products required or eliminated and unit costs, along with the total amount of purchases and credits to be made. Where requested, furnish survey data to substantiate quantities.
b. Indicate applicable taxes, delivery charges, equipment rental, and amounts of trade discounts.
c. Include costs of labor and supervision directly attributable to the change.
d. Include a statement indicating the effect the proposed change in the Work will have on the Contract Time. Use available total float before requesting an extension of Contract Time.

B. Contractor-Initiated Change Order Proposal Requests: When latent or other unforseen conditions require modifications to the Contract, the Contractor may propose changes by submitting a request for a change to the Architect.

1. Include a statement outlining the reasons for the change and the effect of the change on the Work. Provide a complete description of the proposed change. Indicate the effect of the proposed change on the Contract Sum and Contract Time.
2. Include a list of quantities of products required or eliminated and unit costs along with the total amount of purchases and credits to be made. Where requested, furnish survey data to substantiate quantities.
3. Indicate applicable taxes, delivery charges, equipment rental, and amounts of trade discounts.
4. Include costs of labor and supervision directly attributable to the change.
5. Include an updated Contractor's Construction Schedule that indicates the effect of the change, including but not limited to, changes in activity duration, start and finish times, and activity relationships. Use available total float before requesting an extension of the Contract Time.
6. Comply with requirements of Division 1 Section "Product Requirements" if the proposed change requires substitution of one product or system for product or system specified.

C. Proposal Request Form: Use AIA Document G 709 for Change Order Proposal Requests.

1.5 CHANGE ORDER PROCEDURES

A. Upon the Owner's approval of a Change Order Proposal Request, the Architect will issue a Change Order for signatures of the Owner and Contractor on AIA Form G 701.

1.6 CONSTRUCTION CHANGE DIRECTIVE

A. Construction Change Directive: When the Owner and Contractor are not in total agreement on the terms of a Change Order Proposal Request, the Architect may issue a Construction Change Directive on AIA Form G 714, instructing the Contractor to proceed with a change in the Work, for subsequent inclusion in a Change Order.

1. The Construction Change Directive will contain a complete description of the change in the Work and designate the method to be followed to determine change in the Contract Sum or Contract Time.

B. Documentation: Maintain detailed records on a time and material basis of work required by the Construction Change Directive.

1. After completion of the change, submit an itemized account and supporting data necessary to substantiate cost and time adjustments to the Contract.

PART 2 - PRODUCTS (Not Applicable)

PART 3 - EXECUTION (Not Applicable)

END OF SECTION 01 26 00

Section 01 29 00 - Payment Procedures

PART 1 - GENERAL

1.1 RELATED DOCUMENTS

A. Drawings and general provisions of Contract, including General and Supplementary Conditions and other Division 0 and/or Division 01 Specification Sections, apply to this Section.

1.2 SUMMARY

A. This Section specifies administrative and procedural requirements necessary to prepare and process Applications for Payment.
B. Related Sections: The following Sections contain requirements that relate to this Section.

1. Division 01 Section “Contract Modification Procedures” for administrative procedures for handling changes to the Contract.
2. Division 01 Section “Submittal Procedures” for administrative requirements governing preparation and submittal of Contractor's Construction Schedule and Submittal Schedule.

1.3 SCHEDULE OF VALUES

A. Coordination: Coordinate preparation of the Schedule of Values with preparation of the Contractor's Construction Schedule.
B. Submit the Schedule of Values to the Architect's at the earliest possible date but no later than at the Pre-Construction Conference.
C. Format and Content: Use the categories identified in the Project Manual Table of Contents as a guide to establish line items for the Schedule of Values. Provide at least one line items for each Specification Section.

1. The cost for each section listed shall include labor, materials, overhead and profit.
2. Provide a breakdown of the Contract Sum in sufficient detail to facilitate continued evaluation of the Applications for Payment and progress reports. Arrange consistent with the format of AIA Document G703.
3. Round amounts to the nearest whole dollar; total shall equal the Contract Sum

D. Schedule Updating: Update and resubmit the Schedule of Values when Change Orders or Construction Change Directives result in a change in the Contract Sum.

1. Include each Change Order in sufficient breakdown to parallel original format for Schedule of Values as a separate line item.

1.4 APPLICATIONS FOR PAYMENT

A. General: Each Application for Payment following the initial Application for Payment shall be consistent with previous applications and payments as certified by the Architect and paid for by the Owner.

1. The initial Application for Payment, the Application for Payment at time of Substantial Completion, and the final Application for Payment involve additional requirements.

B. Payment Application Times: Progress payment dates and the period of construction Work covered by each Application for Payment is the period indicated in the Agreement.

C. Payment Application Forms: Use AIA Document G 702 and Continuation Sheets G 703 as the form for Application for Payment.

D. Application Preparation: Complete every entry on the form, including notarization and execution by person authorized to sign legal documents on behalf of the Owner. Incomplete applications will be returned without action.

1. Entries shall match data on the Schedule of Values and Contractor's Construction Schedule. Use updated schedules if revisions have been made.
2. Include amounts of Change Orders and Construction Change Directives issued prior to the last day of the construction period covered by the application.

E. Application Submittal Procedures: Unless otherwise directed by the Architect, an informal submittal of each month's application for Payment shall be submitted for review prior to the submission of the formal submittal.

1. Informal Submittal: Make an informal submittal of the monthly request for payment by filling in the pertinent portions of Payment Application Forms.

a. Informal submittal shall coincide with the last regularly scheduled meeting of each month. Submit three copies of informal request for payment to the Architect for review and comments. Supplementary and back-up data will not be required with this informal request for payment, but will be necessary for the formal request for payment. Revise the informal submittal as agreed to by parties at the monthly meeting or subsequently notified afterwards.

F. Transmittal of Formal Request for Payment: Submit one original notarized and three executed copies of each formal Application for Payment and four copies of any supporting data to the Architect by means ensuring receipt within 24 hours; all copies shall be complete, including copies of invoices for materials stored on-site, waivers of lien, and similar attachments, when required.

1. Utilize a transmittal form listing attachments, and recording appropriate information related to the application in a manner acceptable to the Architect.
2. The Architect will review the formal submittal with work in place and, when approved, will sign the Application and Certificate for Payment and will distribute:

a. The original and one copy to the Owner.
b. One copy to the Contractor.
c. One copy will be retained by the Architect.

G. Waivers of Mechanics Lien: With each Application for Payment, submit Affidavit and Partial Waiver of Lien for the period of construction covered by the application on the form entitled "AFFIDAVIT AND PARTIAL WAIVER OF LIEN" and is included herein.

H. Initial Application for Payment: Administrative actions and submittals that must precede or coincide with submittal of the first Application for Payment include the following:

1. List of subcontractors.
2. List of principal suppliers and fabricators.
3. Schedule of Values.
4. Contractor's Construction Schedule.
5. Submittal Schedule (preliminary if not final).
6. List of Contractor's Staff Assignments.
7. Report of Preconstruction meeting.
8. Certificates of insurance and insurance policies.
9. Performance and Payment Bonds.

I. Application for Payment at Substantial Completion: Following issuance of the Certificate of Substantial Completion, submit an Application for Payment.

1. Administrative actions and submittals that shall proceed or coincide with this application include:

a. Submission of the Contractor's Certification of Substantial Completion.
b. Warranties (guarantees) and maintenance agreements.
c. Maintenance instructions.
d. Final cleaning.
e. List of incomplete Work, recognized as exceptions to Architect's Certificate of Substantial Completion.

J. Final Payment Application: Administrative actions and submittals which must precede or coincide with submittal of the final payment Application for Payment include the following:

1. Submission of the Contractor's Certification of Completion for Final Acceptance closeout requirements.
2. Completion of items specified for completion after Substantial Completion.
3. Assurance that unsettled claims will be settled.
4. Assurance that Work not complete and accepted will be completed without undue delay.
5. Transmittal of required Project construction records to Owner.
6. Proof that taxes, fees and similar obligations have been paid.
7. Removal of temporary facilities and services.
8. Removal of surplus materials, rubbish and similar elements.

PART 2 - PRODUCTS (Not Applicable).

PART 3 - EXECUTION (Not Applicable).

PART 4 - AFFIDAVIT

AFFIDAVIT AND PARTIAL WAIVER OF LIEN

BEFORE ME, the undersigned authority, on this day personally appeared _____, known to me to be a credible person and officer of _____, (hereunder called Contractor) and who, being duly sworn, upon his oath declares and acknowledges as follows:

1. I am the duly authorized agent for the said Contractor which has authorized me to make this affidavit, to enter into the agreements and to grant the lien waivers herein set forth, on its behalf and as its acts and deeds, and all of the facts and recitations herein are true and correct.

2. Pursuant to an agreement dated _____ between _____ and UNIVERSITY OF LOUISIANA AT LAFAYETTE (the Owner). The Contractor has supplied materials and performed labor in connection with the construction of improvements upon certain real property, located on THE CAMPUS OF THE UNIVERSITY OF LOUSIANA AT LAFAYETTE - LAFAYETTE, LOUISIANA in LAFAYETTE Parish.

Said improvements are more particularly described as HEBRARD BOULEVARD RENOVATIONS ON THE CAMPUS OF THE UNIVERSITY OF LOUSIANA AT LAFAYETTE (the "Improvements").

3. The contractor has requested payment in the amount of $_____ for all materials supplied and labor performed to the date hereof in connection with the construction of the Improvements during the period through _____ and pledge to release these funds to settle individual accounts which have been billed to Contractor for the applicable payment period..

4. The Contractor has actual knowledge that all bills owed by the Contractor to others for materials supplied or labor performed in connection with the Improvements associated with previous payments in the amount of $_____ which have been approved through the period of _____ have been fully paid and satisfied. The Contractor does further warrant that should any claim or lien be filed for material supplied or labor performed by virtue of the Contractor's participation in the construction of said improvements, the Contractor will immediately furnish a bond for release of each such lien, and obtain settlement of any such liens. Should the Contractor be unable to obtain such release, the Contractor agrees to fully indemnify and hold harmless the Owner for any and all costs they may incur by reason of such liens.

EXECUTED THIS _____ DAY OF _____ OF 20___.

BY:_____

SUBSCRIBED AND SWORN TO BEFORE ME BY THE SAID

_____

this _____day of _____, 20___

to certify which witness my hand and seal of office.

_____
NOTARY PUBLIC IN AND FOR

_____

END OF SECTION 01 29 00

Section 01 31 00 - Project Management and Coordination

PART 1 - GENERAL

1.1 RELATED DOCUMENTS

A. Drawings and general provisions of Contract, including General and Supplementary Conditions and other Division 01 Specification Sections, apply to this Section.

1.2 SUMMARY

A. This Section specifies the minimum administrative, supervisory, and procedural requirements for project meetings including but not limited to:

1. Coordination Drawings
2. Administrative and Supervisory Personnel
3. Pre-Construction Conference
4. Pre-Demolition Conference.
5. Progress Meetings.
6. Coordination Meetings.
7. Requests for Interpretation (RFIs)

B. Construction schedules are specified in another Division-1 Section.
C. Related Requirements:

1. Section 01 73 00 "Execution" for procedures for coordinating general installation and field-engineering services, including establishment of benchmarks and control points.
2. Section 01 77 00 "Closeout Procedures" for coordinating closeout of the Contract.

1.3 INFORMATIONAL SUBMITTALS

A. Subcontract List: Prepare a written summary identifying individuals or firms proposed for each portion of the Work, including those who are to furnish products or equipment fabricated to a special design. Include the following information in tabular form:

1. Name, address, and telephone number of entity performing subcontract or supplying products.
2. Number and title of related Specification Section(s) covered by subcontract.

B. Project Executive Identification.
C. Project Coordinator identification.
D. Key Personnel identification.

1.4 COORDINATION

A. Coordination: Coordinate construction operations included in different Sections of the Specifications to ensure efficient and orderly installation of each part of the Work. Coordinate construction operations , included in different Sections, that depend on each other for proper installation, connection, and operation.

1. Schedule construction operation in sequence required to obtain the best results where installation of one part of the Work depends upon installation of other components, before or after its own installation.

2. Coordinate installation of different components with other contractors to ensure maximum accessibility for required maintenance, service, and repair.
3. Make adequate provisions to accommodate items scheduled for later installation.
4. Whereavailability of space is limited, coordinate demolition of different components to ensure maximum efficiency and accessibility for future work operations for removal of all indicated components, including mechanical and electrical.

B. Prepare memoranda for distribution to each party involved, outlining special procedures required for coordination. Include such items as required notices, reports, and list of attendees at meetings.

1. Prepare similar memoranda for Owner and separate contractors if coordination of their Work is required.

C. Administrative Procedures: Coordinate scheduling and timing of required administrative procedures with other construction activities and activities of other contractors to avoid conflicts and to ensure orderly progress of the Work. Such administrative activities include, but are not limited to, the following:

1. Preparation of Contractor's Construction Schedule.
2. Preparation of the Schedule of Values.
3. Installation and removal of temporary facilities and controls.
4. Delivery and processing of submittals.
5. Progress meetings.
6. Project closeout activities.

D. Conservation: Coordinate construction activities to ensure that operations are carried out with consideration given to conservation of energy, water, and materials. Coordinate use of temporary utilities to minimize waste.

1. Salvage materials and equipment involved in performance of, but not actually incorporated into, the Work. See other Sections for disposition of salvaged materials that are designated as Owner's property.

1.5 REQUESTS FOR INTERPRETATION (RFIs)

A. Procedure: Immediately on discovery of the need for interpretation of the Contract Documents, and if not possible to request interpretation at Project meeting, prepare and submit an RFI in the form specified.

1. RFIs shall originate with Contractor. RFIs submitted by entities other than Contractor will be returned with no response.
2. Coordinate and submit RFIs in a prompt manner so as to avoid delays in Contractor's work or work of subcontractors.

B. Content of the RFI: Include a detailed, legible description of item needing interpretation and the following:

1. Project name.
2. Date.
3. Name of Contractor.
4. Name of Architect.
5. RFI number, numbered sequentially.
6. Specification Section number and title and related paragraphs, as appropriate.
7. Drawing number and detail references, as appropriate.
8. Field dimensions and conditions, as appropriate.
9. Contractor's suggested solution(s). If Contractor's solution(s) impact the Contract Time or the Contract Sum, Contractor shall state impact in the RFI.

10. Contractor's signature.
11. Attachments: Include drawings, descriptions, measurements, photos, Product Data, Shop Drawings, and other information necessary to fully describe items needing interpretation.

    a. Supplementary drawings prepared by Contractor shall include dimensions, thicknesses, structural grid references, and details of affected materials, assemblies, and attachments.

C. Architect's Action: Architect will review each RFI, determine action required, and return it. Allow seven working days for Architect's response for each RFI. RFIs received after 1:00 p.m. will be considered as received the following working day.

1. The following RFIs will be returned without action:

    a. Requests for approval of submittals.
    b. Requests for approval of substitutions.
    c. Requests for approval of Contractor’s means and methods.
    d. Requests for coordination information already indicated in the Contract Documents.
    e. Requests for adjustments in the Contract Time or the Contract Sum.
    f. Requests for interpretation of Architect's actions on submittals.
    g. Incomplete RFIs or RFIs with numerous errors.

2. Architect's action may include a request for additional information, in which case Architect's time for response will start again.
3. Architect's action on RFIs that may result in a change to the Contract Time or the Contract Sum may be eligible for Contractor to submit Change Proposal according to Division 01 Section "Contract Modification Procedures."

    a. If Contractor believes the RFI response warrants change in the Contract Time or the Contract Sum, notify Architect in writing within 10 days of receipt of the RFI response.

4. On receipt of Architect's action, update the RFI log and immediately distribute the RFI response to affected parties. Review response and notify Architect within seven days if Contractor disagrees with response.
5. RFI Log: Prepare, maintain, and submit a tabular log of RFIs organized by the RFI number. Submit log monthly

1.6 ADMINISTRATIVE/SUPERVISORY PERSONNEL

A. The Contractor shall furnish a competent and adequate staff as necessary for the proper administration, coordination, supervision and superintendence of the Work; organize the procurement of all materials and equipment so that they will be available at the time they are needed for the Work; and keep an adequate force of skilled workmen on the job to complete the Work in the best and most sound manner in accordance with all requirements of the Contract Documents and in the most expeditious and economical manner consistent with the interests of the Owner.

B. Contractor shall identify in writing a Project Executive who will have full responsibility for the prosecution of the Work, with full authority to act in all matters as necessary for the proper coordination, direction and technical administration of the Work. In addition, the contractor shall identify in writing its Project management staff, including but not limited to, Project Manager, General Superintendents, Project Engineers, etc. Project Executive and Project management staff shall be satisfactory to the Owner based upon credentials to be submitted by Contractor. Project Executive and/or the Project management staff shall be changed at the request of the owner for cause and shall not be changed except with the consent of the Owner. All communications to Superintendent(s) shall be as binding as if given to the Contractor. Contractor shall so designate a sufficient number of representatives to ensure representation on the Site at all times when Work is being performed. Contractor shall at all times enforce strict discipline and good order among its employees and shall not employ in the performance of any portion of the work any unfit person or anyone not skilled in the task assigned to said person.

C. Project Coordinator: Provide a full-time Project Coordinator experienced in administration and supervision of building construction, including mechanical and electrical work. This Project Coordinator is to be authorized to act as general coordinator of interfaces between units of work. For the purpose of this provision, "interface" is defined to include scheduling and sequencing of work, sharing of access to work spaces, installations, protection of each other's work, cutting and patching, tolerances, cleaning, preparation of coordination drawings, inspection, tests, and temporary facilities and services.

D. Key Personnel Names: Prior to commencement of construction operations, submit a list of key personnel assignments, including superintendent and other personnel in attendance at Project site. Identify individuals and their duties and responsibilities; list addresses and telephone numbers, including home and office telephone numbers. Provide names, addresses, and telephone numbers of individuals assigned as standbys in the absence of individuals assigned to Project.

1.7 PRE-CONSTRUCTION CONFERENCE

A. The Contractor shall schedule a pre-construction conference and organizational meeting, at a time convenient to the Owner and the Architect, at the Project site or other convenient location after notification of execution of the Agreement and prior to commencement of construction activities. The meeting shall be conducted to review responsibilities and personnel assignments.

B. Attendees: The Owner, Architect and their consultants, the Contractor and its superintendent, major subcontractors, manufacturers, suppliers and other concerned parties shall each be represented at the conference by persons familiar with and authorized to conclude matters relating to the Work.

1. Contractor shall be responsible to see that his principal Subcontractors, manufacturers, suppliers, and other concerned parties are in attendance and shall furnish to the Architect and Owner the following items.

   a. Schedule of Values.
   b. List of Subcontractors and Material Suppliers.
   c. Construction Schedule.

2. The Contractor shall take minutes of the meeting and distribute to the Owner and Architect.

   a. The Contractor shall be responsible for distribution of the minutes to any subcontractors, suppliers, or other parties the Contractor deems necessary.

C. Agenda: Discuss items of significance that could affect progress including such topics as:

1. Tentative construction schedule.
2. Critical Work sequencing and phasing requirements.
3. Designation of responsible personnel.
4. Procedures for processing field decisions and Change Orders.
5. Procedures for RFIs
6. Procedures for Testing and Inspection
7. Procedures for processing Applications for Payment.

8. Distribution of Contract Documents.
9. Submittal procedures for Shop Drawings, Product Data and Samples.
10. Preparation of record documents.
11. Use of the premises.
12. Owner's requirements and any Work restrictions.
13. Parking availability.
14. Office, work and storage areas.
15. Equipment deliveries and priorities.
16. Temporary utilities.
17. Temporary facilities.
18. First aid.
19. Security.
20. Housekeeping.
21. Working hours.

1.8 PRE-DEMOLITION CONFERENCE

A. The Contractor shall schedule a pre-demolition conference and organizational meeting, at a time convenient to the Owner and the Architect, at the Project site or other convenient location after notification of execution of the Agreement and prior to commencement of work activities. The meeting shall be conducted to review responsibilities and personnel assignments.

B. Attendees: The Owner, Architect and their consultants, the Contractor and its superintendent, major subcontractors, manufacturers, suppliers and other concerned parties shall each be represented at the conference by persons familiar with and authorized to conclude matters relating to the Work.

1. Contractor shall be responsible to see that his principal Subcontractors, manufacturers, suppliers, and other concerned parties are in attendance and shall furnish to the Architect and Owner the following items.

   a. Schedule of Values.
   b. List of Subcontractors and Material Suppliers.
   c. Construction Schedule.

2. The Contractor shall take minutes of the meeting and distribute to the Owner and Architect.

   a. The Contractor shall be responsible for distribution of the minutes to any subcontractors, suppliers, or other parties the Contractor deems necessary.

C. Agenda: Discuss items of significance that could affect progress including such topics as:

1. Tentative construction schedule.
2. Critical Work sequencing and phasing requirements.
3. Designation of responsible personnel.
4. Lines of communication.
5. Procedures for processing field decisions and Change Orders.
6. Procedures for RFIs
7. Procedures for Testing and Inspection
8. Procedures for processing Applications for Payment.
9. Distribution of Contract Documents.
10. Submittal procedures for Shop Drawings, Product Data and Samples.
11. Preparation of record documents.
12. Use of the premises.
13. Owner's requirements and any Work restrictions.
14. Parking availability.
15. Office, work and storage areas.
16. Equipment deliveries and priorities.
17. Temporary utilities.
18. Temporary facilities.
19. Procedures for moisture and mold control
20. Construction waste management and recycling
21. First aid.

22. Security.
23. Housekeeping.
24. Working hours.

D. At the Contractor's option, the Pre-Construction Conference and the Pre-Demolition Conference may coincide and be at the same meeting.

1.9 PROGRESS MEETINGS

A. The Contractor shall conduct weekly progress meetings at the Project site at regularly scheduled intervals.

B. Agenda: Review and correct or approve minutes of the previous progress meeting. Review other items of significance that could affect progress. Include topics for discussion as appropriate to the current status of the Project.

C. Contractor's Construction Schedule: Review progress since the last meeting. Determine where each activity is in relation to the Contractor's Construction Schedule, whether on time or ahead or behind schedule. Determine how construction behind schedule will be expedited; secure commitments from parties involved to do so. Discuss whether schedule revisions are required to ensure that current and subsequent activities will be completed within the Contract Time.

1. Review schedule for next period.

D. Review the present and future needs of each entity present, including such items as:

1. Interface requirements.
2. Time.
3. Sequence of operations.
4. Status of submittals.
5. Status of waste prevention, construction waste management, and recycling activities.
6. Deliveries.
7. Off-site fabrication problems.
8. Access.
9. Site utilization.
10. Temporary facilities and services.
11. Hours of Work.
12. Hazards and risks.
13. Housekeeping.
14. Quality and Work standards.
15. Status of Correction of Deficient items
16. Filed Observations
17. RFI's
18. Status of Proposal Requests
19. Pending changes
20. Status of Change Orders.
21. Documentation of information for payment requests.

E. Reporting: No later than 5 days after each progress meeting date, distribute copies of minutes of the meeting to each party present and to other parties who should have been present. Include a brief summary, in narrative form, of progress since the previous meeting and report.

F. Schedule Updating: Revise the construction schedule after each progress meeting where revisions to the schedule have been made or recognized. Issue the revised schedule concurrently with the report of each meeting.

COORDINATION MEETINGS

G. The Contractor shall conduct monthly Project coordination meetings at the Project site at regularly scheduled times convenient for all parties involved. Project coordination meetings are in addition to specific meetings held for other purposes, such as regular progress meetings and special pre-installation meetings, however this meeting may occur jointly with the weekly progress meeting scheduled for that particular week. Coordinate dates of meetings with preparation and review of the payment request.

1. The Contractor shall request representation at each meeting by every party currently involved in coordination or planning for the construction activities involved.
2. The Contractor shall record meeting results and distribute copies to the Owner and Architect.

a. The Contractor shall be responsible for distribution of the minutes to any subcontractors, suppliers, or other parties affected by decisions or actions resulting from each meeting as the Contractor deems necessary.

1.10 PROJECT CLOSEOUT CONFERENCE

A. Schedule and conduct a project closeout conference, at a time convenient to Owner and Architect, but no later than 10 days prior to the scheduled date of Substantial Completion.

1. Conduct the conference to review requirements and responsibilities related to Project closeout.
2. Attendees: Authorized representatives of Owner, Owner's Commissioning Authority, Architect, and their consultants; Contractor and its superintendent; major subcontractors; suppliers; and other concerned parties shall attend the meeting. Participants at the meeting shall be familiar with Project and authorized to conclude matters relating to the Work.
3. Agenda: Discuss items of significance that could affect or delay Project closeout, including the following:

a. Preparation of record documents.
b. Procedures required prior to inspection for Substantial Completion and for final inspection for acceptance.
c. Submittal of written warranties.
d. Preparation of Contractor's punch list.
e. Procedures for processing Applications for Payment at Substantial Completion and for final payment.
f. Submittal procedures.
g. Owner's partial occupancy requirements, as applicable.
h. Installation of Owner's furniture, fixtures, and equipment.
i. Responsibility for removing temporary facilities and controls.

1.11 MEANS AND METHODS

A. Neither the Architect nor Owner shall participate in any way in the administration or supervision of the Work. The means, methods, techniques, sequences, procedures and safety measures utilized in the performance of the Work are the sole responsibility of the Contractor. Any means, method, techniques, sequence or procedure set forth in the Contract Documents is solely to specify the desired end product; and if the means, method, technique, sequence or procedure will not result in the desired end product or is unsafe or illegal, it is the Contractor's responsibility to select an appropriate means, method, technique, sequence or procedure. Nothing in the Owner's or Architect's review of the general quality and progress of the Work, including acceptance of submittals and work, shall be construed as the assumption of authority or supervision over the performance of the Work.

PART 2 - PRODUCTS (Not Applicable)

PART 3 - EXECUTION

3.1 RESPONSIBILITIES

A. General: The following requirements are minimum Contractor's responsibilities, and are not to be construed as setting limits on the Contractor's responsibilities.

1. Establish lines of authority and communication for the Project. Schedule and conduct meetings among the Owner, Architect, and Contractor for the proper and timely completion of the Work. Meetings to be held on a scheduled basis.
2. Coordinate work of all Subcontractors and material suppliers; this includes but is not limited to: shop drawing coordination and timely submittals, expediting of materials, deliveries and hoisting, and coordination of all field work.
3. Pre-Demolition Conference: See Agenda for Pre-Demolition Meeting.
4. Pre-Construction Conference: See Agenda for Pre-Construction Meeting.
5. Construction Schedules: Prepare, monitor and update detailed schedules of the Work for the Project. Monitor schedules as Work progresses, identifying potential variances between scheduled completion dates, make any adjustments in field work plan and schedule necessary to meet required completion dates, provide monthly summary reports of each monitoring and document all changes in schedule. Observe Work to monitor compliance with schedule. Verify that labor and equipment are adequate to meet and maintain the Schedule for the Work. Verify that product deliveries are adequate to meet and maintain the schedule for the Work including but not limited to timely visits to manufacturing and fabrication facilities. Report any noncompliance to Architect with recommendations for remedy. Ensure that adequate services are provided to comply with requirements for Work and climatic conditions. Ensure proper maintenance and operation of temporary facilities.

    a. Float time, when indicated in the schedule shall be the measure of leeway in starting and completing an activity, and shall belong to the Owner.

6. Changes: Recommend necessary or desirable changes to the Owner and Architect. Assemble and submit the change proposals in a timely fashion to prevent delays in the Work. Analyze Subcontractor's and Suppliers' requests for changes and submit with recommendations. Submit complete back-up information with all Change Proposals including but not limited to quantity and cost of materials to be purchased, labor hours by trade to be expended, subcontractor overhead and profit.
7. Permits and Fees: Ensure that all the proper permits are obtained and inspections made. Verify that subcontractors have obtained permits for inspections.
8. Inspections and Testing: Inspect Work to assure that it is performed in accordance with requirements of Contract Documents. Arrange with Architect and Owner for special inspections for testing when required. Correct Work which does not conform to requirements of Contract Documents.

    a. Installer's Inspection of Conditions: Require the installer of each major unit of work to inspect the substrate to receive work and conditions under which the work is to be performed. The Installer shall report all unsatisfactory conditions in writing to the Contractor. Do not proceed with the work until unsatisfactory conditions have been corrected in a manner acceptable to the Installer.
    b. Manufacturer's Instructions: Where installations include manufactured products, comply with the manufacturer's applicable instructions and recommendations for installation, to the extent that these instructions and recommendations are more explicit or more stringent that requirements indicated in the Contract Documents.

c. Inspect each item of materials or equipment immediately prior to installation. Reject damaged and defective items.
d. Provide attachment and connection devices and methods for securing work. Secure work true to line and level, and within recognized industry tolerances. Allow for expansion and building movement. provide uniform joint width in exposed work. Arrange joints in exposed work to obtain the best visual effect. Refer questionable visual effect choices to the Architect for final decision.
e. Recheck measurements and dimensions of the Work as an integral step of starting each installation.
f. Install each unit of Work during weather conditions and Project status which will ensure the best possible results in coordination with the entire Work. isolate each unit of work from incompatible work as necessary to prevent deterioration.
g. Coordinate enclosure of the Work with required inspections and tests, so as to minimize the necessity of uncovering work for that purpose.

9. Mounting Heights: Where mounting heights are not indicated, mount individual units of work at heights required in the Americans with Disabilities Act (ADAAG) otherwise set at industry recognized standard mounting heights for the particular installation indicated. Refer questionable mounting height choices to the Architect for final decision.
10. Limitting Exposure of Work: To the extent possible through reasonable control and protection methods, supervise performance of the Work in such a manner and by such means which will ensure that none of the Work, whether completed or in progress, will be subjected to harmful, dangerous, damaging or otherwise deleterious exposure during the construction period. Such exposure include, where applicable, but not by way of limitation the following:

a. Excessive static or dynamic loading
b. Excessive internal or external pressure
c. Excessively high or low temperatures
d. Thermal shock
e. Excessively high or low humidity
f. Air contamination or pollution
g. Water or ice
h. Solvents
i. Chemicals
j. Light
k. Radiation
l. Puncture
m. Abrasion
n. Heavy traffic
o. Soiling
p. Bacteria
q. Insect infestation
r. Combustion
s. Electrical current
t. High speed operation, improper lubrication, unusual wear or other misuse
u. Incompatible interface
v. Destructive testing
w. Misalignment
x. Excessive weathering
y. Unprotected storage
z. Improper shipping or handling
aa. Theft
bb. Vandalism

11. Replace and/or repair to like new condition, at no cost to Owner, all materials suffering from deleterious effects of the conditions described above.

12. Coordinate testing laboratory services for both testing required by the Contract Documents and those ordered additionally by the Architect and Owner. Notify laboratory of test schedules. Verify that required personnel are present, that specified tasks are made as scheduled, and compliance of test results with specified criteria. Determine need for testing and submit recommendations to Architect. Administer and cooperate with testing service; assist as may be required, in the performance of the required testing. Provide casual labor, storage and access (scaffolding, ladders, etc.) to testing laboratory as required. Promptly submit test results to the Architect when received.
13. Coordinate with Separate Contractors: Separate Contractors shall be afforded access to the indicated site for the purpose of installing their Work. Provide general requirements services in accordance with the contract for Construction. Coordinate Contractor's Work with Separate Contractor's Work to ensure best, most economical completion of the total Project. Participate in coordination meetings with Separate Contractors, Owner, Architect or other design consultants as required.
14. Interpretations of Contract Documents: Consult with Architect to obtain interpretation or clarification for any portions of Technical Specifications or Drawings which may be unclear or ambiguous. Suggest resolutions if appropriate. Assist in answering of questions which may arise and transmit written interpretation to interested parties.
15. Coordinate, review, administer, and process shop drawings, product data and samples between Subcontractors, material suppliers, and Architect.
16. Owner-Furnished Products for Installation by Contractor: Accept delivery; assume responsibility for handling, storage, protection and security for Owner-furnished products listed in the Contract Documents, if any.
17. Assume full charge of the designated premises and site for the storage of materials allotting space between Subcontractors for the various materials in such a manner as will facilitate the Work, avoid overloading the structure, and maintain order and good and safe housekeeping within said building and on the Site. Assume responsibility for the proper care and protection against damage and theft of all materials, equipment and tools delivered, and of materials, equipment and tools in Contractor's custody whether on or off the Site, and whether or not title was passed to Owner. Schedule and coordinate the unloading, hoisting and storage of materials and access and hoisting of labor for Separate Contractors.
18. Maintain Contact Documents at the Site: Maintain for Architect's and Owner's use one copy of all Drawings, Specifications, Addenda, approved shop drawings, Change Orders, and other modifications, in good order and marked to record all field changes made during construction. These documents shall be available to the Architect and Owner as required for their use and reference.

    a. Prepare, maintain, and submit daily log of Progress of the Work including description of Work performed, weather conditions, number of workmen by trade, visitors, City/State inspections and other significant information.
    b. Upon completion of the Work in total, coordinate record documents with the architect to provide a full and comprehensive set of record prints and reproducible tracings indicating all changes for the Owner's use. Refer to Section 01 77 00 for additional requirements.

19. Maintain Reports and Records at Job Site: Daily log of progress of Work and other pertinent data. Maintain log accessible to Architect. Maintain the following records: Contracts, purchases, materials and equipment records, including record of Owner-furnished products, applicable handbooks, codes and standards, and such additional records as may be properly required. Obtain information from Subcontractors and maintain similar record documents. At Substantial Completion of Project, deliver copies of all records to owner for Owner's records.

20. Daily Field Reports: Daily reports shall be kept to record a chronological, day-to-day account of the work force, the respective activities performed, the weather conditions, and any specific events that take place on the Project. Daily reports shall not be used as a communication tool. Any situations requiring specific action shall be brought to the attention of the appropriate party by means of written correspondence, memoranda, or meeting minutes. Photographs shall be used with daily reports to clarify or confirm statements and concerns. Include the following minimum information in daily reports:

    a. Date.
    b. Weather temperature, wind, precipitation.
    c. Number of workers on site by subcontractor and trade.
    d. Material and equipment deliveries.
    e. Construction quantities placed.
    f. General description of the work accomplished.
    g. Specific problems encountered.
    h. Meetings held.
    i. List visitors to site and their companies.
    j. Construction photographs.

21. Ensure that Project is kept clean during progress of Work and at completion of Contract.

END OF SECTION 01 31 00

Section 01 32 00 – Construction Progress Documentation

PART 1 - GENERAL

1.1 RELATED DOCUMENTS

A. Drawings and general provisions of the Contract, including General and Supplementary Conditions and other Division 01 Specification Sections, apply to this Section.

1.2 SUMMARY

A. Section includes administrative and procedural requirements for documenting the progress of construction during performance of the Work, including the following:

1. Contractor's Construction Schedule.
2. Construction schedule updating reports.
3. Daily construction reports.
4. Site condition reports.
5. Unusual event reports.

B. Related Requirements:

1. Division 01 Section “Submittal Procedures” for submitting schedules and reports.
2. Division 01 Section “Quality Requirements,: For submitting a schedule of tests and inspections.

1.3 DEFINITIONS

A. Activity: A discrete part of a project that can be identified for planning, scheduling, monitoring, and controlling the construction Project. Activities included in a construction schedule consume time and resources.

1. Critical Activity: An activity on the critical path that must start and finish on the planned early start and finish times.
2. Predecessor Activity: An activity that precedes another activity in the network.
3. Successor Activity: An activity that follows another activity in the network.

B. Critical Path: The longest connected chain of interdependent activities through the network schedule that establishes the minimum overall Project duration and contains no float.
C. Event: The starting or ending point of an activity.
D. Float: The measure of leeway in starting and completing an activity.

1. Float time is for the exclusive use or benefit of the Owner.
2. Free float is the amount of time an activity can be delayed without adversely affecting the early start of the successor activity.
3. Total float is the measure of leeway in starting or completing an activity without adversely affecting the planned Project completion date.

1.4 INFORMATIONAL SUBMITTALS

A. Format for Submittals: Submit required submittals in the following format:

1. PDF file.

B. Contractor's Construction Schedule: Initial schedule, of size required to display entire schedule for entire construction period.
C. Construction Schedule Updating Reports: Submit with Applications for Payment.
D. Site Condition Reports: Submit at time of discovery of differing conditions.
E. Unusual Event Reports: Submit at time of unusual event.

1.5 COORDINATION

A. Coordinate Contractor's Construction Schedule with the schedule of values, list of subcontracts,] submittal schedule, progress reports, payment requests, and other required schedules and reports.

1. Secure time commitments for performing critical elements of the Work from entities involved.
2. Coordinate each construction activity in the network with other activities and schedule them in proper sequence.

1.6 CONTRACTOR'S CONSTRUCTION SCHEDULE, GENERAL

A. Computer Scheduling Software: Prepare schedules using current version of a program that has been developed specifically to manage construction schedules.
B. Time Frame: Extend schedule from date established for the Notice to Proceed to date of Substantial Completion.

1. Contract completion date shall not be changed by submission of a schedule that shows an early completion date, unless specifically authorized by Change Order.

C. Activities: Treat each floor or separate area as a separate numbered activity for each main element of the Work. Comply with the following:

1. Activity Duration: Define activities so no activity is longer than 20 days, unless specifically allowed by Architect.
2. Procurement Activities: Include procurement process activities for the following long lead items and major items, requiring a cycle of more than 60 days, as separate activities in schedule. Procurement cycle activities include, but are not limited to, submittals, approvals, purchasing, fabrication, and delivery.
3. Submittal Review Time: Include review and resubmittal times indicated in Section 013300 "Submittal Procedures" in schedule. Coordinate submittal review times in Contractor's Construction Schedule with submittal schedule.
4. Substantial Completion: Indicate completion in advance of date established for Substantial Completion, and allow time for Architect's and Owner’s administrative procedures necessary for certification of Substantial Completion.
5. Punch List and Final Completion: Include not more than 30 days for completion of punch list items and final completion.

D. Constraints: Include constraints and work restrictions indicated in the Contract Documents and as follows in schedule, and show how the sequence of the Work is affected.

1. Work by Owner: Include a separate activity for each portion of the Work performed by Owner.
2. Owner-Furnished Products: Include a separate activity for each product. Include delivery date indicated in Section 011000 "Summary." Delivery dates indicated stipulate the earliest possible delivery date.
3. Construction Areas: Identify each major area of construction for each major portion of the Work. Indicate where each construction activity within a major area must be sequenced or integrated with other construction activities to provide for the following:

    a. Structural completion.
    b. Temporary enclosure and space conditioning.
    c. Permanent space enclosure.
    d. Completion of mechanical installation.
    e. Completion of electrical installation.
    f. Substantial Completion.

E. Milestones: Include milestones indicated in the Contract Documents in schedule, including, but not limited to, the Notice to Proceed, Substantial Completion, and final completion.

1. Temporary enclosure and space conditioning.

F. Contractor's Construction Schedule Updating: At monthly intervals, update schedule to reflect actual construction progress and activities. Issue schedule one week before each regularly scheduled progress meeting.

1. Revise schedule immediately after each meeting or other activity where revisions have been recognized or made. Issue updated schedule concurrently with the report of each such meeting.
2. Include a report with updated schedule that indicates every change, including, but not limited to, changes in logic, durations, actual starts and finishes, and activity durations.
3. As the Work progresses, indicate final completion percentage for each activity.

G. Recovery Schedule: When periodic update indicates the Work is 14 or more calendar days behind the current approved schedule, submit a separate recovery schedule indicating means by which Contractor intends to regain compliance with the schedule. Indicate changes to working hours, working days, crew sizes, equipment required to achieve compliance, and date by which recovery will be accomplished.

H. Distribution: Distribute copies of approved schedule to Architect, Owner, separate contractors, testing and inspecting agencies, and other parties identified by Contractor with a need-to-know schedule responsibility.

1. Post copies in Project meeting rooms and temporary field offices.
2. When revisions are made, distribute updated schedules to the same parties and post in the same locations. Delete parties from distribution when they have completed their assigned portion of the Work and are no longer involved in performance of construction activities.

1.7 REPORTS

A. Daily Construction Reports: Prepare a daily construction report concerning events at Project site:

B. Site Condition Reports: Immediately on discovery of a difference between site conditions and the Contract Documents, prepare and submit a detailed report. Submit with a Request for Information. Include a detailed description of the differing conditions, together with recommendations for changing the Contract Documents.

C. Unusual Event Reports: When an event of an unusual and significant nature occurs at Project site, whether or not related directly to the Work, prepare and submit a special report. List chain of events, persons participating, responses by Contractor's personnel, evaluation of results or effects, and similar pertinent information. Advise Owner in advance when these events are known or predictable.

1. Submit unusual event reports directly to Owner within one day of an occurrence. Distribute copies of report to parties affected by the occurrence.

PART 2 - PRODUCTS (Not Used)

PART 3 - EXECUTION (Not Used)

END OF SECTION 01 32 00

Section 01 32 33 - Photographic Documentation

PART 1 - GENERAL

1.1 RELATED DOCUMENTS

A. Drawings and general provisions of Contract, including General and Supplementary Conditions and other Division 01 Specification Sections, apply to this Section.

1.2 SUMMARY

A. This Section specifies administrative and procedural requirements for project meetings including but not limited to:

1. Pre-Construction photographs.
2. Periodic Construction photographs
3. Pre-Construction videotapes.

B. Related Sections include the following:

1. Division 02 Section “Selective Demolition” for photographic documentation before selective demolition operations commence.

1.3 SUBMITTALS

A. Key Plan: Submit key plan of Project site and building with notation of vantage points marked for location and direction of each photograph or videotape. Indicate elevation or story of construction. Include same label information as corresponding set of photographs or videotape.

B. Construction Photographs: Submit two prints of each photographic view within seven days of taking photographs.

1. Size of photographs shall be sufficient to show necessary detail in question however in no case shall the size of photographs be less than 4" x 6".
2. Computer printed digital images will be acceptable on 8-1/2 x 11 inch sheets, bound in a three ring binder.
3. Identify prints with the following information:

a. Name of Project.
b. Date photograph was taken if not date stamped by camera.
c. Unique sequential identifier of location on site.

4. Digital Images: If digital images are used, submit a complete set of digital images on electronic file on CD-Rom in JPEG format. Identify electronic media with date photographs were taken.

C. Videotapes: Submit two copies of each videotape with protective sleeve or case within seven days of recording. Remove safety tab to prevent accidental re-recording.

1. Identification: On each copy, provide an applied label with the following information:

a. Name of Project.
b. Date videotape was recorded.
c. Description of vantage point, indicating location, direction, and elevation of story or construction.

1.4 COORDINATION

A. General: Cooperate with photographer and provide auxiliary services requested including access to Project site and use of temporary facilities, including temporary lighting required to produce clear, well-lit photographs without obscuring shadows.

1.5 USAGE RIGHTS

A. Obtain and transfer copyright usage rights from photographer to Owner for unlimited reproduction of photographic documentation.

PART 2 - PRODUCTS

2.1 PHOTOGRAPHIC MEDIA

A. Digital Images: Provide images in uncompressed JPEG format, produced by a digital camera with minimum sensor size of 8.0 megapixels, and at an image resolution of not less than 3200 by 2400 pixels.
B. Videotape Format: Provide high-resolution, digital video disc in format acceptable to Architect.

PART 3 - EXECUTION

3.1 CONSTRUCTION PHOTOGRAPHS

A. Digital Images: Submit digital images exactly as originally recorded in the digital camera, without alterations, manipulation, editing, or modifications using image-editing software.

1. Date and time: Indicate date and time in file name for each image.

B. Preconstruction Photographs: Before commencement of any demolition operations or any construction operations on site, schedule a pre-construction site survey with a University of Louisiana at Lafayette representative so that any such elements needing repair, or which has already been damaged in any manner, may be properly identified, described, and recorded with the University of Louisiana at Lafayette Physical Plant.

1. If no such damage is recorded, then any structures over which has been crossed during construction which are later found to be damaged shall be considered to have been so damaged by him and shall be repaired and/or replaced by the Contractor as necessary to return them to their original condition to the satisfaction of the University of Louisiana at Lafayette Physical Plant at no cost to the Owner.

2. Take color digital photographs of Project site and surrounding properties, including existing items to remain during construction, from different vantage points, to effectively document conditions of existing components in immediately vicinity of new work to occur.
3. Take photographs to show existing conditions adjacent to property before starting Work.
4. Take photographs of existing buildings either on or adjoining property to accurately record physical conditions at start of construction.
5. Take additional photographs as required to record settlement or cracking of adjacent structures, pavements, and improvements.
6. Record and document fully all measures of tree protection and erosion and sedimentation control measures established at the commencement of the Project.

3.2 CONSTRUCTION VIDEO RECORDINGS

A. Preconstruction Videotape: Before commencement of any demolition operations or any construction operations on site, record video of Project site and surrounding properties from different vantage points, to effectively document conditions of existing components in immediately vicinity of new work to occur.

1. Flag construction limits before recording construction video recordings.
2. Show existing conditions adjacent to Project site before starting the Work.
3. Show existing buildings either on or adjoining Project site to accurately record physical conditions at start of the Project.
4. Show protection efforts by Contractor.

END OF SECTION 01 32 33

Section 01 33 00 - Submittal Procedures

PART 1 - GENERAL

1.1 RELATED DOCUMENTS

A. Drawings and general provisions of Contract, including General and Supplementary Conditions and other Division 01 Specification Sections, apply to this Section.

1.2 SUMMARY

A. This Section specifies administrative and procedural requirements for submittals required for performance of the Work, including:

1. Contractor's construction schedule.
2. Submittal schedule.
3. Shop Drawings.
4. Product Data.
5. Samples.

B. Administrative Submittals: Refer to other Division 01 Sections and other Contract Documents for requirements for administrative submittals. Such submittals include, but are not limited to:

1. Permits.
2. Applications for Payment.
3. Performance and Payment bonds.
4. Insurance Certificates.
5. List of Subcontractors.

C. Related Sections: The following Sections contain requirements that relate to this Section:

1. Division 01 Section "Payment Procedures" specifies requirements for submittal of the Applications for Payment and the Schedule of Values.
2. Division 01 Section "Project Management and Coordination" specifies requirements for submittal and distribution of meeting and conference minutes.
3. Division 01 Section "Quality Requirements" specifies requirements for submittal of inspection and test reports.
4. Division 01 Section "Closeout Procedures" specifies requirements for submittal of Project Record Documents and warranties and guarantees at project closeout.
5. Division 01 Section “Operation and Maintenance Data” for submitting operation and maintenance manuals.
6. Divisions 02 thru 49 Sections for specific requirements for submittals in those Sections.

1.3 DEFINITIONS

A. Action Submittals: Written and graphic information that requires Architect‘s responsive action.
B. Informational Submittals: Written information that does not require Architect’s responsive action. Submittals may be rejected for not complying with these requirements.
C. File Transfer Protocol (FTP): Communications protocol that enables transfer of files to and from another computer over a network and that serves as the basis for standard Internet protocols. An FTP site is a portion of a network located outside of network firewalls within which internal and external users are able to access files.
D. Portable Document Format (PDF): An open standard file format licensed by Adobe Systems used for representing documents in a device-independent and display resolution-independent fixed-layout document format.

1.4 INITIAL SUBMITTAL PROCEDURES

A. Coordination: Coordinate preparation and processing of submittals with performance of construction activities. Transmit each submittal sufficiently in advance of performance of related construction activities to avoid delay.

1. Coordinate transmittal of different types of submittals for related elements of the Work so processing will not be delayed by the need to review submittals concurrently for coordination.
2. The Architect reserves the right to withhold action on a submittal requiring color selections and/or coordination with other submittals until all related submittals or other submittals requiring color selections are received.

B. Processing: Allow sufficient review time so that installation will not be delayed as a result of the time required to process submittals, including time for resubmittal.

1. Allow two weeks for initial review. Allow additional time if processing must be delayed to permit coordination with subsequent submittals. The Architect will promptly advise the Contractor when a submittal being processed must be delayed for coordination.
2. If an intermediate submittal is necessary, process the same as the initial submittal.
3. Allow two weeks for reprocessing each submittal.
4. No extension of Contract Time will be authorized because of failure to transmit submittals to the Architect sufficiently in advance of the Work to permit processing.

C. Submittal Preparation: Place a permanent label or title block on each submittal for identification. Indicate the name of the entity that prepared each submittal on the label or title block.

1. Provide a space approximately 4" x 5" on the label or beside the title block on Shop Drawings to record the Contractor's review and approval markings and the action taken.
2. Include the following information on the label for processing and recording action taken.

a. Project name.
b. Date and revision date.
c. Name and address of Architect.
d. Name and address of Contractor.
e. Name and address of subcontractor.
f. Name and address of supplier.
g. Name of manufacturer.
h. Number and title of appropriate Specification Section.
i. Drawing number and detail references, as appropriate.
j. Contractor's stamp, initialed or signed, certifying to review of submittal, verification of field measurements, and compliance with the Contract Documents.

D. Submittal Transmittal: Package each submittal appropriately for transmittal and handling. Transmit each submittal from Contractor to Architect using a transmittal form. On the form, or separate sheet, record deviations from Contract Document requirements, including minor variations and limitations. Submittals received from sources other than the Contractor will be returned without action.

1.5 RE-SUBMITTAL PROCEDURES

A. General: In the event that items are returned to the Contractor for resubmittal due to unfulfilled conditions as required by the Contract Documents, the following conditions shall apply.

B. Review Procedures: On receipt of the first resubmittal of a previous submittal that has been returned to the Contractor for resubmittal, the Architect will proceed with a review for unfilled requirements from the previous submittal.

1. The Architect will perform the review of the first resubmittal under the conditions stated herein for the Initial Submittal Procedures.
2. Should the submittal still not respond to unfulfilled requirements from the previous submittal or still not respond to the specified, indicated, or noted requirements referenced on the previous submittal, the Architect will once again return the submittal to the Contractor for resubmittal.
3. Should Architect be required to perform additional reviews after the initial resubmittal, due to failure of the submittals to comply with the specified requirements, or the failure to respond to previous comments on either of the previous two submittals, the Owner shall compensate the Architect for such additional services in accordance with the following provisions:

   a. The Architect's review of Contractor's submittals will be limited to examination of an initial submittal and one (1) resubmittal. In the event that additional submittal reviews are necessary above these indicated quantities, the Architect, and each of the Architect's principal consultants involved in the re-review process, shall be paid $175.00/hour for their time spent and this sum is to be withheld from the unpaid funds remaining in the Contract sum. The Owner is entitled to obtain reimbursement from the Contractor for amounts paid to the Architect, and each of the Architect's principal consultants, for evaluation of the additional resubmittals. The payment shall be made by the Owner and deducted from the construction contract funds"

4. Owner will deduct the amount of such compensation from the final payment to the Contractor.

1.6 CONTRACTOR'S CONSTRUCTION SCHEDULE

A. Bar-Chart Schedule: Prepare a fully developed, horizontal bar-chart type Contractor's construction schedule. Submit prior to the Pre-Construction Conference.
B. Work Stages: Indicate important stages of construction for each major portion of the Work.
C. Distribution: Following response to the initial submittal, print and distribute copies to the Architect.

1.7 SUBMITTAL SCHEDULE

A. After development and acceptance of the Contractor's Construction schedule, prepare a complete schedule of submittals. Submit the schedule within 10 days of the date required for establishment of the Contractor's construction schedule.
B. Distribution: Following response to the initial submittal, print and distribute copies to the Architect. When revisions are made, distribute revised copies to the Architect.

1.8 CONTRACTOR'S USE OF ARCHITECT'S CAD FILES

A. General: At Contractor's written request, copies of the Architectural CAD files will be provided to Contractor for Contractor's use in connection with the Project, subject to the following conditions:

1. Written request submitted by Contractor shall contain a specific statement that the Contractor agrees, to the fullest extent permitted by law, to indemnify and hold harmless the Architect, its officers, directors, employees, and consultants against all damages, liabilities or costs, including reasonable attorney's fees and defense costs, arising from any changes made by anyone other than the Consultant or from any reuse of the electronic files without the prior written consent of the Architect.

   a. Any drawing files released are solely for the convenience of the Contractor and convey no license or right of use beyond that specifically for this Project.

b. Submission of $150 per each requested group of files to compensate Architect and or his Consultants for the time and expenses necessary for personnel to locate, assemble, and package the requested information.
c. Under no circumstances shall delivery of any electronic files for use by Contractor be deemed a sale by the Architect or his Consultants and the Architect and his Consultants make no warranty, either express or implied, of merchantability and fitness for any particular purpose.

2. Contractor shall identify specific need and requesting Subcontractor, if applicable, and the specific drawings that are requested.
3. Contractor shall remain fully responsible for verification of all conditions associated with the use of the drawings, including but not limited to dimensional accuracy, conditions properly represented, and correctness of indicated items.
4. Files shall be provided only in .DWG format in AutoCAD 2016.

   a. Architect makes no representation as to the compatibility of these files with Contractors hardware or software.

5. Any references to preparation by Architect or his consultants shall be eliminated.
6. Only building base plans shall be provided and shall not be modified in any way.
7. Drawings may not be updated relative to any modifications made during the construction operations or revisions made to any Drawings subsequent to release for Bidding.
8. Addendums may not be reflected in Drawings released for use.
9. Architects layering conventions, attributes, etc., shall be transmitted “as is” and will not be modified to accommodate Contractor’s layering standards.
10. Architect will e-mail Contractor the requested documents via .ZIP files within five business days from receipt of written request.
11. Drawing files released for use shall only be used to address the specific need indicated in the Contractor’s written request.

PART 2 - PRODUCTS

2.1 ACTION SUBMITTALS

A. General: Prepare and submit Action Submittals required by individual Specification Sections.
B. Submit Roofing Manufacturer’s Proposed Assembly Letter (PAL) for review and approval by Architect and acknowledgment by Owner prior to ordering of any materials.
C. Shop Drawings: Submit newly prepared information, drawn to accurate scale. Highlight, encircle, or otherwise indicate deviations from the Contract Documents. Do not reproduce Contract Documents or copy standard information as the basis of Shop Drawings. Standard information prepared without specific reference to the Project is not considered Shop Drawings.

1. Shop Drawings include fabrication and installation drawings, setting diagrams, schedules, patterns, templates and similar drawings. Include the following information:

   a. Dimensions.
   b. Identification of products and materials included.
   c. Compliance with specified standards.
   d. Notation of coordination requirements.
   e. Notation of dimensions established by field measurement.

2. Sheet Size: Except for templates, patterns and similar full-size Drawings, submit Shop Drawings as PDF electronic files via e-mail when sheet size is 8-1/2" x 11" but no larger than 11" x 17". Submit hard copy version when sheet sizes are larger than 11" x 17" but in no case shall they be larger than 30" x 42" (750 by 1200 mm).

3. Initial Submittal for any Hard Copy Submittals: Submit one correctable translucent reproducible print and three blue- or black-line prints for the Architect's review; the reproducible print will be returned. If a reproducible print is not submitted , then only one reviewed and annotated copy shall still be returned. In any case the Contractor shall be responsible for making the necessary additional copies for distribution and/or file copies for his use or his subcontractor or supplier's use.
4. Do not use Shop Drawings without an appropriate final stamp indicating action taken in connection with construction.

D. Product Data: Collect Product Data into a single submittal for each element of construction or system. Product Data includes printed information such as manufacturer's installation instructions, catalog cuts, standard color charts, roughing-in diagrams and templates, standard wiring diagrams and performance curves.

1. Where Product Data must be specially prepared because standard printed data is not suitable for use, submit as "Shop Drawings."
2. Mark each copy to show applicable choices and options. Where printed Product Data includes information on several products, some of which are not required, mark copies to indicate the applicable information.
3. Include the following information, as applicable:

    a. Manufacturer's printed recommendations.
    b. Compliance with recognized trade association standards.
    c. Compliance with recognized testing agency standards.
    d. Application of testing agency labels and seals.
    e. Notation of dimensions verified by field measurement.
    f. Notation of coordination requirements.

4. Do not submit Product Data until compliance with requirements of the Contract Documents has been confirmed.
5. Do not proceed with installation until an applicable copy of Product Data applicable is in the installer's possession.
6. Do not permit use of unmarked copies of Product Data in connection with construction.

E. Samples: Submit full-size, fully fabricated Samples and/or Field Constructed Mock-ups cured and finished as specified and physically identical with the material or product proposed. Samples include partial sections of manufactured or fabricated components, cuts or containers of materials, color range sets, and swatches showing color, texture and pattern.

1. Mount, display, or package Samples and/or Field Constructed Mock-ups in the manner specified to facilitate review of qualities indicated. Prepare to match the Architect's Sample. Include the following:

    a. Generic description.
    b. Source.
    c. Product name or name of manufacturer.
    d. Compliance with recognized standards.
    e. Availability and delivery time.

2. Submit Samples for review of kind, color, pattern, and texture, for a final check of these characteristics with other elements, and for a comparison of these characteristics between the final submittal and the actual component as delivered and installed.
3. Preliminary submittals: Where Samples are for selection of color, pattern, texture or similar characteristics from a range of standard choices, submit a full set of choices for the material or product.
4. Preliminary submittals will be reviewed and returned with the Architect's mark indicating selection and other action.

5. Submittals: Except for Samples illustrating assembly details, workmanship, fabrication techniques, connections, operation and similar characteristics, submit number of sets specified in each of the Specification Sections.
6. Maintain sets of Samples, as returned, at the Project site, for quality comparisons throughout the course of construction.
7. Distribution of Samples: Prepare and distribute additional sets to subcontractors, manufacturers, fabricators, suppliers, installers, and others as required for performance of the Work.
8. Field Samples and/or Mock-ups specified in individual Sections are special types of Samples. Field Samples are full-size examples erected on site to illustrate finishes, coatings, or finish materials and to establish the standard by which the work will be judged.

    a. Comply with submittal requirements to the fullest extent possible. Notify Architect upon completion of Field erected samples to indicated availability for review and approval. Provide transmittal forms to provide a record of activity.

F. Submittals: Submit number of copies of each required submittal; which Contractor requires plus three copies which will be retained by the Architect. The Architect will return the other copies marked with action taken and corrections or modifications required.

G. Distribution: Furnish copies of final submittal to installers, subcontractors, suppliers, manufacturers, fabricators, and others required for performance of construction activities.

2.2 INFORMATIONAL SUBMITTALS

A. General: Prepare and submit Informational Submittals required by other Specification Sections.

1. Number of Copies: Submit two copies of each submittal, unless otherwise indicated. Architect will not return copies.
2. Certificates and Certifications: Provide a notarized statement that includes signature of entity responsible for preparing certification. Certificates and certifications shall be signed by an officer or other individual authorized to sign documents on behalf of that entity.
3. Test and Inspection Reports: Comply with requirements specified in Division 1 Section "Quality Requirements."

B. Coordination Drawings: Comply with requirements specified in Division 1 Section "Project Management and Coordination."

C. Contractor's Construction Schedule: Comply with requirements specified in Division 1 Section "Construction Progress Documentation."

D. Qualification Data: Prepare written information that demonstrates capabilities and experience of firm or person. Include lists of completed projects with project names and addresses, names and addresses of architects and owners, and other information specified.

E. Installer Certificates: Prepare written statements on manufacturer's letterhead certifying that Installer complies with requirements in the Contract Documents and, where required, is authorized by manufacturer for this specific Project.

F. Manufacturer Certificates: Prepare written statements on manufacturer's letterhead certifying that manufacturer complies with requirements in the Contract Documents. Include evidence of manufacturing experience where required.

G. Product Certificates: Prepare written statements on manufacturer's letterhead certifying that product complies with requirements in the Contract Documents.

H. Material Certificates: Prepare written statements on manufacturer's letterhead certifying that material complies with requirements in the Contract Documents.

I. Material Test Reports: Prepare reports written by a qualified testing agency, on testing agency's standard form, indicating and interpreting test results of material for compliance with requirements in the Contract Documents.

J. Product Test Reports: Prepare written reports indicating current product produced by manufacturer complies with requirements in the Contract Documents. Base reports on evaluation of tests performed by manufacturer and witnessed by a qualified testing agency, or on comprehensive tests performed by a qualified testing agency.

K. Research/Evaluation Reports: Prepare written evidence, from a model code organization acceptable to authorities having jurisdiction, that product complies with building code in effect for Project. Include the following information:

a. Name of evaluation organization.
b. Date of evaluation.
c. Time period when report is in effect.
d. Product and manufacturers' names.
e. Description of product.
f. Test procedures and results.
g. Limitations of use.

L. Schedule of Tests and Inspections: Comply with requirements specified in Division 1 Section "Quality Requirements."

M. Preconstruction Test Reports: Prepare reports written by a qualified testing agency, on testing agency's standard form, indicating and interpreting results of tests performed before installation of product, for compliance with performance requirements in the Contract Documents.

N. Compatibility Test Reports: Prepare reports written by a qualified testing agency, on testing agency's standard form, indicating and interpreting results of compatibility tests performed before installation of product. Include written recommendations for primers and substrate preparation needed for adhesion.

O. Field Test Reports: Prepare reports written by a qualified testing agency, on testing agency's standard form, indicating and interpreting results of field tests performed either during installation of product or after product is installed in its final location, for compliance with requirements in the Contract Documents.

P. Maintenance Data: Prepare written and graphic instructions and procedures for operation and normal maintenance of products and equipment. Comply with requirements specified in Division 1 Section "Operation and Maintenance Data."

Q. Design Data: Prepare written and graphic information, including, but not limited to, performance and design criteria, list of applicable codes and regulations, and calculations. Include list of assumptions and other performance and design criteria and a summary of loads. Include load diagrams if applicable. Provide name and version of software, if any, used for calculations. Include page numbers.

R. Manufacturer's Instructions: Prepare written or published information that documents manufacturer's recommendations, guidelines, and procedures for installing or operating a product or equipment. Include name of product and name, address, and telephone number of manufacturer. Include the following, as applicable:

1. Preparation of substrates.
2. Required substrate tolerances.
3. Sequence of installation or erection.
4. Required installation tolerances.
5. Required adjustments.
6. Recommendations for cleaning and protection.

S. Manufacturer's Field Reports: Prepare written information documenting factory-authorized service representative's tests and inspections. Include the following, as applicable:

1. Name, address, and telephone number of factory-authorized service representative making report.
2. Statement on condition of substrates and their acceptability for installation of product.
3. Statement that products at Project site comply with requirements.

4. Summary of installation procedures being followed, whether they comply with requirements and, if not, what corrective action was taken.
5. Results of operational and other tests and a statement of whether observed performance complies with requirements.
6. Statement whether conditions, products, and installation will affect warranty.
7. Other required items indicated in individual Specification Sections.

T. Insurance Certificates and Bonds: Prepare written information indicating current status of insurance or bonding coverage. Include name of entity covered by insurance or bond, limits of coverage, amounts of deductibles, if any, and term of the coverage

U. Material Safety Data Sheets (MSDSs): Submit information directly to Contractor; do not submit to Architect.

1. Architect will not review portions of submittals that include MSDSs as this information relates directly to safety, which is solely the responsibility of the Contractor.

2.3 DELEGATED DESIGN

A. Performance and Design Criteria: Where professional design services or certifications by a design professional are specifically required of Contractor by the Contract Documents, provide products and systems complying with specific performance and design criteria indicated.

1. If criteria indicated are not sufficient to perform services or certification required, submit a written request for additional information to Architect.

B. Delegated-Design Submittal: In addition to Shop Drawings, Product Data, and other required submittals, submit three copies of a statement, signed and sealed by the responsible design professional, for each product and system specifically assigned to Contractor to be designed or certified by a design professional.

1. Indicate that products and systems comply with performance and design criteria in the Contract Documents. Include list of codes, loads, and other factors used in performing these services.

PART 3 - EXECUTION

3.1 CONTRACTOR’S REVIEW

A. Review each submittal and check for coordination with other Work of the Contract and for compliance with the Contract Documents. Note corrections and field dimensions. Mark with approval stamp before submitting to Architect.

B. Approval Stamp: Stamp each submittal with a uniform, approval stamp. Include Project name and location, submittal number, Specification Section title and number, name of reviewer, date of Contractor's approval, and statement certifying that submittal has been reviewed, checked, and approved for compliance with the Contract Documents.

3.2 ARCHITECT'S ACTION

A. Except for submittals for record, information or similar purposes, where action and return is required or requested, the Architect will review each submittal, mark to indicate action taken, and return promptly.

1. Architect will not review submittals that do not bear the Contractor’s approval stamp and will return them without action.
2. Compliance with specified characteristics is the Contractor's responsibility.

B. Action Stamp: The Architect will stamp each submittal with a uniform, self-explanatory action stamp. The stamp will be appropriately marked, as follows, to indicate the action taken:

1. Final Unrestricted Release: Where submittals are marked "Reviewed" that part of the Work covered by the submittal may proceed provided it complies with requirements of the Contract Documents; final acceptance will depend upon that compliance.
2. Final-But-Restricted Release: When submittals are marked "Note Markings" that part of the Work covered by the submittal may proceed provided it complies with notations or corrections on the submittal and requirements of the Contract Documents; final acceptance will depend on that compliance.
3. Returned for Resubmittal: When submittal is marked "Rejected" or "Revise and Resubmit" do not proceed with that part of the Work covered by the submittal, including purchasing, fabrication, delivery, or other activity. Revise or prepare a new submittal in accordance with the notations; resubmit without delay. Repeat if necessary to obtain a different action mark.

   a. Do not permit submittals marked "Rejected" or "Revise and Resubmit" to be used at the Project site, or elsewhere where Work is in progress.

4. Other Action: Where a submittal is primarily for information or record purposes, special processing or other activity, or has not been specifically requested by other requirements of the Contract Documents, the submittal will be returned unreviewed.

C. Informational Submittals: Architect will review each submittal and will not return it, or will return if it does not comply with requirements.

D. Partial submittals are not acceptable, will be considered nonresponsive, and will be returned without review.

E. Submittals not required by the Contract Documents may not be reviewed and may be discarded.

END OF SECTION 01 33 00

Section 01 35 16 - Alteration Project Requirements

PART 1 – GENERAL

1.1 RELATED DOCUMENTS

A. Drawings and general provisions of the Contract, including General and Supplementary Conditions and Division 01 Specification Sections, apply to this Section.
B. Specifications throughout all Divisions of the Project Manual are directly applicable to this Section, and this Section is directly applicable to them.

1.2 SUMMARY

A. Basic and supplemental requirements for Work that alters existing facility components, systems or equipment.

1.3 REFERENCE STANDARDS

A. The latest published edition of a reference shall be applicable to this Project unless identified by a specific edition date.
B. All reference amendments adopted prior to the effective date of this Contract shall be applicable to this Project.
C. All materials, installation and workmanship shall comply with the applicable requirements and standards addressed within the Contract Documents.

1.4 DEFINITIONS

A. Cutting: Removal of in-place construction necessary to permit installation or performance of other Work.
B. Patching: Fitting and repair work required to restore surfaces to original conditions after installation of other Work.
C. Demolish: Completely remove and legally dispose of off-site.
D. Remove: Detach items from existing construction and legally dispose of them off-site, unless indicated to be removed and salvaged or removed and reinstalled.
E. Remove and Salvage: Detach items from existing construction and deliver them to Owner [ready for reuse].
F. Remove and Reinstall: Detach items from existing construction, prepare them for reuse, and reinstall them where indicated.
G. Salvage: Carefully detach from existing construction, in a manner to prevent damage, and deliver to Owner ready for reuse. Include fasteners or brackets needed for reattachment elsewhere.
H. Recycle: Recovery of demolition waste for subsequent processing in preparation for reuse.
I. Existing to Remain: Existing functional items of construction that are not to be removed and that are not otherwise indicated to be removed, removed and salvaged, or removed and reinstalled.

1.5 QUALITY ASSURANCE

A. Perform remodeling, alteration, demolition, cutting, patching, removal, refinishing, relocation, and disposal work in accordance with Federal, State and local health and safety standards, codes, and ordinances. Where conflicts occur, comply with the more restrictive requirements.

B. Perform remodeling, alteration, demolition, cutting, patching, removal, refinishing, and relocation work in such a manner as to preserve the aesthetic and structural integrity of materials and construction.

C. When the Contractor determines that an existing penetration cannot be sealed due to accessibility, constructability or any other condition, the Contractor shall notify the Owner's Project Manager in writing and obtain a clear direction to proceed prior to any installation of Work.

1.6 SUBMITTALS

A. Submit schedule for all proposed shut-downs prior to start of Work. The Contractor shall notify the Owner's Construction Inspector and the Owner's Project Manager, in writing, of any planned utility outages in accordance with Owner's Special Conditions.

B. Work with noise-producing equipment is subject, at all times, to Owner's approval of entire procedure. Submit a schedule of all such operations to the Owner's Project Manager at least two weeks in advance of need and secure approval of the Owner before proceeding.

1.7 JOB CONDITIONS

A. Visit the Project Site to determine by inspection all existing conditions, including access to the Site, the nature of structures, objects, and materials to be encountered, and all other facts concerning or affecting the Work. Information on the Drawings showing existing conditions does not constitute a guarantee that other items may not be found or encountered.

B. Obvious existing conditions, installations, and obstructions affecting work of this Section shall be taken into consideration as necessary work and included as part of work of this Section, the same as though completely shown or described.

C. Seal off areas in which work is in progress from the occupied portions of the building to prevent entry of dust and noise into occupied portions of the building. Take all necessary measures to limit the amount of dust and dirt rising and scattering in the air to the lowest practical level.

D. Do not block required exits.

E. Protect from damage existing finish work that is to remain in place and becomes exposed during remodeling operations.

F. Protect entrances and floors with suitable coverings when necessary.

G. Cover and protect furniture, equipment, and fixtures from soilage or damage when demolition work is performed in areas where such items have not been removed.

H. Remove protections at completion of work.

I. Conduct demolition and removal operations and the removal of debris to ensure minimum interference with roads, streets, walks, and other adjacent occupied or used facilities. Do not close or obstruct streets, walks, or other occupied or used facilities without permission from authorities having jurisdiction. Provide alternate routes around closed or obstructed traffic ways if required by governing regulations.

1.9 EXISTING UTILITIES AND CONDITIONS

A. The location and description of utilities and conditions shown on Drawings are indicated from information available and are approximate only. Verify existing utilities and conditions.

B. Protect existing utilities and conditions from damage. Repairs to utilities and condition damaged during the Work shall be the responsibility of the Contractor and shall be made promptly at no additional cost to the Owner.

C. Maintain existing utilities in operation at all times except where specific permission is given by Owner's Project Manage. Support and protect all exposed piping and utilities during demolition and utility rough-in.

D. All outages of utilities, sidewalks, parking areas, driveways or facility access shall be scheduled in 48 hours advance with the Owner.

E. Notify the Owner's Project Manager and all concerned parties prior to disconnecting and terminating abandoned utilities.

1.10 REMOVAL OF EXISTING CONSTRUCTION

A. Where permanently disconnecting domestic water, gas, treated water, drainage, vent, or other piping serving removed fixtures, inlets, outlets or equipment, remove all associated piping back to remaining active mains.

B. Perform demolition and removal work completely and remove debris from the Site. Use such methods as required to complete the Work within the limitations of governing regulations.

1. Proceed with demolition and removal work in a systematic manner, from the top to the bottom in areas indicated.
2. Remove debris in covered carts to limit air pollution.
3. Locate demolition equipment throughout the structure and remove materials so as to not impose excessive loads to supporting walls, floors, or framing.
4. Remove debris from elevated portions of building by chute, hoist, or other device that will convey debris to grade level in a controlled descent.

C. Patching, Repairing, and Finishing Existing Work:

1. Perform in compliance with the applicable requirements of the Specification technical Section covering the work to be performed and the requirements of this Section.

a. All holes and damages areas exposed to view shall be repaired. Repaired construction shall match existing adjacent construction and finish, unless otherwise indicated or specified.
b. Minor surface abrasions, small nail holes, cracks, aged checked natural wood finish and other similar deterioration not visible, when viewed under finished lighting conditions, from a distance of 6 inches will not be required to be repaired if the base material is sound and suitable to receive the scheduled finishes, if any.
c. Penetration holes thought exterior walls above grade shall be grouted and sealed as required to produce a weather tight seal.
d. Penetration holes through exterior walls below grade shall be grouted and sealed to produce a watertight seal.

2. Damages: Promptly repair damages to adjacent facilities caused by demolition and removal operations at no additional cost to the Owner.
3. Painting and Finishing:

a. Preparation: Prepare patched areas as required for new work. Wash areas to be repainted with neutral soap or detergent, thoroughly rinse, and sand when dry. Feather remaining paint edges smooth with sandpaper.
b. Painting and Finishing: conform to the applicable provisions of Painting Section. Prepare and build up bare areas and patches in existing painted surfaces with proper primer and intermediate coats, sand smooth and flush with adjoining surfaces. Paint all areas schedules to be painted and/or repainted as specified in Painting Section of the Specifications, except the first or primer coat may be omitted on existing painted surfaces.

C. Disposal of Debris: Clean up all material, debris, and rubbish resulting from remodeling work, remove from the building and site, and legally dispose of. Leave all areas of work in “broom clean: condition.

1. All debris shall be transported out of the building in covered carts with no materials extending above the cart rim.

PART 2 – PRODUCTS

2.1 GENERAL

A. All materials shall meet or exceed all applicable referenced standards, federal, state and local requirements, and conform to codes and ordinances of authorities having jurisdiction.

B. Matching Existing Work: Except where otherwise specifically indicated or specified as a definite change, the finish materials and appearance of the new work shall match the existing contiguous materials and finishes in all respects. Repairs and/or continuations of existing work shall be relatively imperceptible in the finished work when viewed under finished lighting conditions from a distance of 6 feet (1.8 meters).

PART 3 – EXECUTION

3.1 SEQUENCING AND SCHEDULING

A. Schedule Work so as to impose a minimum of hardship on the present operation of the facilities and the performance of the work of other trades.

B. Maintain existing utilities indicated to remain; keep in service and protect against damage during demolition and removal operations.

C. Do not interrupt existing utilities serving occupied or used facilities, except when authorized in writing by Owner. Provide temporary services during interruptions to existing utilities, as acceptable to the governing authorities.

3.2 POST DEMOLITION CONFERENCE

A. Coordinate, schedule and conduct post demolition meetings prior to installation of new Work.

1. Purpose: Communicate existing conditions revealed by demolition that are not identified on Contract Drawings. Determine scope, cost and schedule impacts and obtain a clear direction to proceed.
2. Attendees: Contractor, Owner's Project Manager, Architect/Engineer.

3.3 INSTALLATION

A. Check Drawings carefully and thoroughly investigate existing building construction.

B. Protect work to remain from damage. Use barricades, tarpaulins, temporary walls, plywood, planking, masking, and other suitable means and methods as accepted.

1. Restore accidental or careless damage to work to remain in place to a condition as good as or better than existed before work was commenced and at no additional cost to the Owner.

C. Provide all shoring and bracing necessary to positively protect existing elements of the building. Use material adequate to support anticipated loads with a properly calculated margin of safety. Provide for transfer of stresses to successively lower construction.

D. All work must be staged and performed so that disruption to occupied areas is minimized and so that these areas are available and suitable for their intended use during normal hours of operation. Any work that would incur excessive noise, dust, or disruption must be schedules in advance with the Owner.

E. Carefully remove and replace items of existing construction indicated to remain upon completion of the Contract, but which require removal to complete the work. Match condition of construction prior to the start of the Work unless otherwise required. Carefully remove items indicated for relocations in new Work, or to be retained by Owner, to avoid damage, thoroughly clean, and reinstall as indicated or store as directed.

F. Items of salvable value to the Contractor may be removed from the structure as the work progresses. Salvaged items must be transported from the Project Site as they are removed. Storage or sale of removed items on the Project Site will not be permitted.

G. Remove and dispose of all demolition materials, equipment and debris off premises, unless identified for salvage on the drawings.

1. Deliver salvaged items to a location as directed by the Owner's Project Manager. Protect and store all items identified for reuse. Contractor assumes no salvage value for items removed and not reused in the Project.

END OF SECTION 01 35 16

Section 01 40 00 - Quality Requirements

PART 1 - GENERAL

1.1 RELATED DOCUMENTS

A. Drawings and general provisions of Contract, including General and Supplementary Conditions and other Division 01 Specification Sections, apply to this Section.

1.2 SUMMARY

A. This Section includes administrative and procedural requirements for quality assurance and quality control services.

B. Quality control services include inspections and tests and related actions including reports, performed by Contractor, by independent agencies, and by governing authorities.

1. They do not include Contract enforcement activities performed by the Architect or additional Construction Observation services or Quality Control observations done separately by the Owner.

C. Inspection and testing services are required to verify compliance with requirements specified or indicated. These services do not relieve the Contractor of responsibility for compliance with Contract Document requirements.

1. Specific quality control requirements for individual construction activities are specified in the Sections that specify those activities. Those requirements, including inspections and tests, cover production of standard products as well as customized fabrication and installation procedures.
2. Inspections, test and related actions specified are not intended to limit the Contractor's quality control procedures that facilitate compliance with Contract Document requirements.
3. Requirements for the Contractor to provide quality control services required by the Architect, Owner, Commissioning Authority, or authorities having jurisdiction are not limited by provisions of this Section.
4. Specific test and inspection requirements are not specified in this Section.

1.3 CONFLICTING REQUIREMENTS

A. Referenced Standards: If compliance with two or more standards is specified and the standards establish different or conflicting requirements for minimum quantities or quality levels, comply with the most stringent requirements. Refer uncertainties and requirements that are different, but apparently equal, to Architect for a decision before proceeding.

B. Minimum Quantity or Quality Levels: The quantity or quality level shown or specified shall be the minimum provided or performed. The actual installation may comply exactly with the minimum quantity or quality specified, or it may exceed the minimum within reasonable limits. To comply with these requirements, indicated numeric values are minimum or maximum, as appropriate, for the context of requirements. Refer uncertainties to Architect for a decision before proceeding.

1.4 OWNER RESPONSIBILITIES

A. Selection and Payment: The Owner will be responsible to engage and pay for the services of an independent agency to perform inspections and in-place field tests of materials and construction as defined in the General Conditions and more specifically in each respective Specification Section category requiring testing, except in the event of a test failure the Contractor shall pay for retesting.

B. The Owner will secure the services of an independent full time quality control inspecting agency for quality control of the following, but not limited to, areas of the project:

1. Civil drainage work, including subsurface installation of components
2. Earthwork and building pad placement
3. Concrete for pavement and buildings

1.5 CONTRACTOR RESPONSIBILITIES

A. Cooperation of Contractor: The Contractor shall cooperate with agencies performing required inspections, tests, and similar services and provide access to the Work and reasonable auxiliary services as requested. Provide access to the Work at all times and at all locations where the Work is in progress. Provide facilities for such access to enable the laboratory to perform its functions properly. Auxiliary services required include, but are not limited to:

1. Make available without cost, samples of all materials to be tested in accordance with applicable standards specified.
2. Furnish such nominal labor and sheltered working space as may be required to facilitate obtaining of samples at the Project site.
3. Advise the Laboratory of the identity of the material sources and instruct the suppliers to allow access for tests and/or inspections by the Laboratory.
4. Notify the Laboratory sufficiently in advance of operations to allow for completion of initial tests and assignment of inspection personnel.
5. Notify the Laboratory sufficiently in advance of cancellation of required testing operations.

   a. The Contractor shall be responsible to compensate the Laboratory for expenses incurred due to the failure to notify the Laboratory if requirements for testing are canceled.

6. Security and protection of samples and test equipment at the Project site.

B. Mix Design and Reporting: The Contractor shall select the testing lab and pay for all mix design, testing, and reporting in accordance with the requirements of applicable Project Manual Sections.

1. The Owner shall pay for all in-place field testing.
2. The testing lab selected by the Contractor shall be different from the testing lab selected by the Owner.

C. Retesting: The Contractor is responsible for retesting where results of required inspections, tests or similar services prove unsatisfactory and do not indicate compliance with Contract Document requirements, regardless of whether the original test was the Contractor's responsibility.

1. Cost of retesting construction revised or replaced by the Contractor is the Contractor's responsibility, where required tests were performed on original construction.

1.6 TESTING AGENCY RESPONSIBILITIES

A. The independent testing agency engaged to perform inspections, sampling and testing of materials and construction specified in individual Specification Sections shall cooperate with the Architect and Contractor in performance of its duties, and shall provide qualified personnel to perform required inspections and tests.

1. The agency shall provide facilities for storage and curing of test samples, and shall be responsible for delivery of samples to testing laboratories.
2. The agency shall notify the Architect and Contractor promptly of irregularities or deficiencies observed in the Work during performance of its services.
3. The agency is not authorized to release, revoke, alter or enlarge requirements of the Contract Documents, or approve or accept any portion of the Work.
4. The agency shall not perform any duties of the Contractor.

B. Test Methods: Tests and inspections shall be conducted in accordance with the latest standards of ASTM or other recognized authorities.

1.7 SUBMITTALS

A. The independent testing agency shall submit a certified written report of each inspection, test or similar service, to the Owner, Architect, Engineer, Contractor and to any other party that the Owner may specify.

1. Report Data: Written reports of each inspection, test or similar service shall include, but not be limited to:

a. Date of issue.
b. Project title and number.
c. Name, address and telephone number of testing agency.
d. Dates and locations of samples and tests or inspections.
e. Names of individuals making the inspection or test.
f. Designation of the Work and test method.
g. Identification of product and Specification Section.
h. Complete inspection or test data.
i. Test results and an interpretation of test results.
j. Ambient conditions at the time of sample-taking and testing.
k. Comments or professional opinion as to whether inspected or tested Work complies with Contract Document requirements.
l. Name and signature of laboratory inspector.
m. Recommendations on retesting.

1.8 QUALITY ASSURANCE

A. General: Qualifications paragraphs in this Article establish the minimum qualification levels required; individual Specification Sections specify additional requirements.
B. Installer Qualifications: A firm or individual experienced in installing, erecting, or assembling work similar in material, design, and extent to that indicated for this Project, whose work has resulted in construction with a record of successful in-service performance.
C. Manufacturer Qualifications: A firm experienced in manufacturing products or systems similar to those indicated for this Project and with a record of successful in-service performance, as well as sufficient production capacity to produce required units.

D. Fabricator Qualifications: A firm experienced in producing products similar to those indicated for this Project and with a record of successful in-service performance, as well as sufficient production capacity to produce required units.

E. Professional Engineer Qualifications: A professional engineer who is legally qualified to practice in jurisdiction where Project is located and who is experienced in providing engineering services of the kind indicated. Engineering services are defined as those performed for installations of the system, assembly, or product that are similar to those indicated for this Project in material, design, and extent.

F. Testing Agency Qualifications: An NRTL, an NVLAP, or an independent agency with the experience and capability to conduct testing and inspecting indicated, as documented according to ASTM E 548; and with additional qualifications specified in individual Sections; and where required by authorities having jurisdiction, that is acceptable to authorities.

1. NRTL: A nationally recognized testing laboratory according to 29 CFR 1910.7.
2. NVLAP: A testing agency accredited according to NIST's National Voluntary Laboratory Accreditation Program.

G. Factory-Authorized Service Representative Qualifications: An authorized representative of manufacturer who is trained and approved by manufacturer to inspect installation of manufacturer's products that are similar in material, design, and extent to those indicated for this Project.

H. Preconstruction Testing: Where testing agency is indicated to perform preconstruction testing for compliance with specified requirements for performance and test methods, comply with the following:

1. Contractor responsibilities include the following:

a. Provide test specimens representative of proposed products and construction.
b. Submit specimens in a timely manner with sufficient time for testing and analyzing results to prevent delaying the Work.
c. Provide sizes and configurations of test assemblies, mockups, and laboratory mockups to adequately demonstrate capability of products to comply with performance requirements.
d. Build site-assembled test assemblies and mockups using installers who will perform same tasks for Project.
e. Build laboratory mockups at testing facility using personnel, products, and methods of construction indicated for the completed Work.
f. When testing is complete, remove test specimens, assemblies, mockups, and laboratory mockups; do not reuse products on Project.

2. Testing Agency Responsibilities: Submit a certified written report of each test, inspection, and similar quality-assurance service to Architect, with copy to Contractor. Interpret tests and inspections and state in each report whether tested and inspected work complies with or deviates from the Contract Documents.

I. Mockups: Before installing portions of the Work requiring mockups, build mockups for each form of construction and finish required to comply with the following requirements, using materials indicated for the completed Work:

1. Build mockups in location and of size indicated or, if not indicated, as directed by Architect.
2. Notify Architect seven days in advance of dates and times when mockups will be constructed.
a. Demonstrate the proposed range of aesthetic effects and workmanship.
b. Obtain Architect's approval of mockups before starting work, fabrication, or construction.

1) Allow seven days for initial review and each re-review of each mockup.

c. Maintain mockups during construction in an undisturbed condition as a standard for judging the completed Work.
d. Demolish and remove mockups when directed, unless otherwise indicated.

PART 2 - PRODUCTS (Not Applicable).

PART 3 - EXECUTION

3.1 EXTENT OF LABORATORY TESTS AND INSPECTIONS

A. The Architect will recommend to the Owner the type and number of tests to be performed on the Project. The Contractor shall be advised of the number and type of tests to be performed by the Testing Laboratory.

3.2 REPAIR AND PROTECTION

A. General: Upon completion of inspection, testing, sample-taking and similar services, repair damaged construction and restore substrates and finishes to eliminate deficiencies, including deficiencies in visual qualities of exposed finishes. Comply with Contract Document requirements for "Cutting and Patching."

B. Protect construction exposed by or for quality control service activities, and protect repaired construction.

C. Repair and protection are the Contractor's responsibility, regardless of the assignment of responsibility for inspection, testing or similar services.

END OF SECTION 01 40 00

Section 01 50 00 - Temporary Facilities and Controls

PART 1 - GENERAL

1.1 RELATED DOCUMENTS

A. Drawings and general provisions of the Contract, including General and Supplementary Conditions and other Division 01 Specification Sections, apply to this Section.

1.2 SUMMARY

A. This Section includes requirements for construction facilities and temporary controls, including temporary utilities, support facilities, and security and protection.

B. Related Sections include the following:

1. Division 01 Section “Summary” for limitations on utility interruptions and other work restrictions.
2. Division 01 Section “Execution” for progress cleaning requirements.
3. Division 02 thru 49 Sections for temporary heat, ventilation, and humidity requirements for products in those Sections.

C. Temporary utilities include, but are not limited to, the following:

1. Water service and distribution.
2. Temporary electric power and light.
3. Telephone service.
4. Sanitary facilities, including drinking water.

D. Support facilities include, but are not limited to, the following:

1. Field offices and storage sheds.
2. Temporary enclosures.
3. Temporary project identification signs and bulletin boards.
4. Waste disposal services.
5. Rodent and pest control.
6. Construction aids and miscellaneous services and facilities.

E. Security and protection facilities include, but are not limited to, the following:

1. Temporary fire protection.
2. Barricades, warning signs, and lights.
3. Environmental protection.

1.3 INFORMATIONAL SUBMITTALS

A. Erosion and Sedimentation Control Plan: Show compliance with requirements of EPA Construction General Permit or authorities having jurisdiction, whichever is more stringent.

1.4 QUALITY ASSURANCE

A. Regulations: Comply with industry standards and applicable laws and regulations of authorities having jurisdiction including, but not limited to, the following:

1. Building code requirements.
2. Health and safety regulations.
3. Utility company regulations.
4. Police, fire department, and rescue squad rules.
5. Environmental protection regulations.

B. Standards: Comply with NFPA 241 "Standard for Safeguarding Construction, Alterations, and Demolition Operations," ANSI A10 Series Standards for "Safety Requirements for Construction and Demolition," and NECA Electrical Design Library "Temporary Electrical Facilities."

1. Electrical Service: Comply with NEMA, NECA, and UL standards and regulations for temporary electric service. Install service in compliance with NFPA 70 "National Electric Code."

C. Inspections: Arrange for authorities having jurisdiction to inspect and test each temporary utility before use. Obtain required certifications and permits.

1.5 PROJECT CONDITIONS

A. Temporary Utilities: At the earliest feasible time, when acceptable to the Owner, change over from use of temporary service to use of permanent service.

B. Conditions of Use: Keep temporary services and facilities clean and neat in appearance. Operate in a safe and efficient manner. Relocate temporary services and facilities as the Work progresses. Do not overload facilities or permit them to interfere with progress. Take necessary fire-prevention measures. Do not allow hazardous, dangerous, or unsanitary conditions, or public nuisances to develop or persist on-site.

C. Temporary Use of Permanent Facilities: Engage Installer of each permanent service to assume responsibility for operation, maintenance, and protection of each permanent service during its use as a construction facility before the Owner’s acceptance, regardless of previously assigned responsibilities.

PART 2 - PRODUCTS

2.1 MATERIALS

A. General: Provide new materials. If acceptable to the Architect, the Contractor may use undamaged, previously used materials in serviceable condition. Provide materials suitable for use intended.

B. Lumber and Plywood: Comply with requirements in Division 6 Section "Rough Carpentry."

1. For signs and directory boards, provide exterior-type, Grade B-B high-density concrete form overlay plywood of sizes and thicknesses indicated.

C. Paint: Comply with requirements of Division 9 Section "Painting."

1. For sign panels and applying graphics, provide exterior-grade alkyd gloss enamel over exterior primer.

D. Water: Provide potable water approved by local health authorities.

E. Short-Term Open Mesh Fencing: Provide orange open mesh, co-polymer fabric safety fencing 6-feet high with galvanized steel pipe posts, 1-1/2" I.D. for line posts and 2-1/2" I.D. for corner posts. Safety fence material shall have aperture size of approximately 1.5 inch x 1.5 inch. Minimum tensile strength shall not be less than 600 pounds per foot of width. Material shall be fully stabilized for ultraviolet light resistance.

2.2 TEMPORARY FACILITIES

A. Field Offices, General: General: Due to restrictions of site temporary a field office, storage and fabrication sheds will not be allowed.

2.3 EQUIPMENT

A. General: Provide new equipment. If acceptable to the Architect, the Contractor may use undamaged, previously used equipment in serviceable condition. Provide equipment suitable for use intended.

B. Water Hoses: Provide 3/4-inch (19-mm), heavy-duty, abrasion-resistant, flexible rubber hoses 100 feet (30 m) long, with pressure rating greater than the maximum pressure of the water distribution system. Provide adjustable shutoff nozzles at hose discharge.

C. Electrical Outlets: Provide properly configured, NEMA-polarized outlets to prevent insertion of 110- to 120-Volt plugs into higher voltage outlets. Provide receptacle outlets equipped with ground-fault circuit interrupters, reset button, and pilot light for connection of power tools and equipment.

D. Electrical Power Cords: Provide grounded extension cords. Use hard-service cords where exposed to abrasion and traffic. Provide waterproof connectors to connect separate lengths of electric cords if single lengths will not reach areas where construction activities are in progress. Do not exceed safe length-voltage ratio.

E. Lamps and Light Fixtures: Provide general service incandescent lamps of wattage required for adequate illumination. Provide guard cages or tempered-glass enclosures where exposed to breakage. Provide exterior fixtures where exposed to moisture.

F. Temporary Toilet Units: Provide self-contained, single-occupant toilet units of the chemical, aerated recirculation, or combustion type. Provide units properly vented and fully enclosed with a glass-fiber-reinforced polyester shell or similar nonabsorbent material.

G. Fire Extinguishers: Provide hand-carried, portable, UL-rated, with class and extinguishing agent as required by locations and classes of fire exposures.

1. Comply with NFPA 10 and NFPA 241.

PART 3 - EXECUTION

3.1 INSTALLATION

A. Use qualified personnel for installation of temporary facilities.

B. Locate facilities where they will serve the Project adequately and result in minimum interference with performance of the Work. Relocate and modify facilities as required.

C. Provide each facility ready for use when needed to avoid delay. Maintain and modify as required. Do not remove until facilities are no longer needed or are replaced by authorized use of completed permanent facilities.

3.2 TEMPORARY UTILITY INSTALLATION

A. General: Engage the appropriate local utility company to install temporary service or connect to existing service. Where company provides only part of the service, provide the remainder with matching, compatible materials and equipment. Comply with company recommendations.

1. Arrange with company and any existing users for a time when service can be interrupted, if necessary, to make connections for temporary services.
2. Provide adequate capacity at each stage of construction.
3. Installation, Use, and Removal Charges: Payment for temporary utilities, with the exception of telephone service, shall be under the following terms:

   a. Installation, maintenance, and removal costs are the Contractor's responsibility and are not chargeable to the Owner or Architect. Neither the Owner nor Architect will accept these costs as a basis of claims for Change Orders.
   b. Usage charges for water and electricity for temporary facilities will be paid for by the Contractor.
   c. Usage charges for temporary telephone service shall be paid for by the Contractor.

B. Water Service: Install water service and distribution piping of sizes and pressures adequate for construction until permanent water service is in use.

1. Install branch piping as necessary, with taps located so that water is available throughout the Project by the use of hoses. Protect pipes and fittings against freezing.
2. Where water service is required maintain leak-proof hose connections and outlet valves. Where installations or in-place construction might be damaged by spillage or leakage, provide a drip pan of suitable size and relief drain to minimize water damage. Drain any accumulated water promptly from pans.
3. Sterilization: Sterilize temporary water piping prior to use.

C. Temporary Electric Power Service: Provide weatherproof, grounded electric power service and distribution system of sufficient size, capacity, and power characteristics during construction period. Include meters, transformers, overload-protected disconnects, automatic ground-fault interrupters, and main distribution switch gear.

1. Install electric power service underground.
2. Install circuit and branch wiring, with area distribution boxes located so that power and lighting is available throughout the construction by the use of construction-type power cords. Install where least exposed to damage. Where permitted, wiring circuits not exceeding 125 Volts, AC 20 ampere rating, and lighting circuits may be nonmetallic sheathed cable where overhead and exposed to view for surveillance.

D. Temporary Lighting: Install and operate temporary lighting that will fulfill security and protection requirements without operating the entire system. Provide temporary lighting that will provide adequate illumination for construction operations and traffic conditions.

E. Temporary Heat: Provide temporary heat required by construction activities for curing or drying of completed installations or for protection of installed construction from adverse effects of low temperatures or high humidity. Select safe equipment that will not have a harmful effect on completed installations or elements being installed. Coordinate ventilation requirements to produce the ambient condition required and minimize consumption of energy.

F. Ventilation and Humidity Control: Provide temporary ventilation required by construction activities for curing and or drying of completed installations or for protecting installed construction from adverse effects of high humidity. Select equipment that will not have a harmful effect on completed installations or elements being installed. Coordinate ventilation requirements to produce the ambient condition required and minimize consumption of energy.

1. Provide dehumidification systems when required to reduce substrate moisture levels to the level required to allow installation or application of finishes.

G. Temporary Telephones: Provide superintendent with cellular telephone or portable two-way radio for use when away from field office.

1. Post a list of important telephone numbers in an accessible and visible location for the duration of the project.

H. Sanitary facilities include temporary toilets, wash facilities, and drinking-water fixtures. Comply with regulations and health codes for the type, number, location, operation, and maintenance of fixtures and facilities. Install where facilities will best serve the Project's needs and as approved by the Owner.

1. Toilets: Install self-contained toilet units. Shield toilets to ensure privacy. Use of pit-type privies will not be permitted nor will use of any existing campus facilities in any adjacent building.

a. Provide toilet tissue, paper towels, paper cups and similar disposal materials for each facility. Provide covered waste containers for used materials.

I. Wash Facilities: Install wash facilities supplied with potable water at convenient locations for personnel involved in handling materials that require wash-up for a healthy and sanitary condition. Dispose of drainage properly. Supply cleaning compounds appropriate for each condition.

J. Drinking-Water Facilities: Provide containerized, tap-dispenser, bottled-water drinking-water units, including paper supply.

3.3 SUPPORT FACILITIES INSTALLATION

A. Traffic Controls: Comply with requirements of authorities having jurisdiction.

1. Protect existing site improvements to remain including curbs, pavement, and utilities.
2. Maintain access for fire-fighting equipment and access to fire hydrants.

B. Parking: Provide temporary parking areas for construction personnel. Do not allow any parking of vehicles beneath drip line of existing trees.

C. Dewatering Facilities and Drains: For temporary drainage and dewatering facilities and operations not directly associated with construction activities included under individual Sections, comply with dewatering requirements of applicable Division 2 Sections. Where feasible, utilize the same facilities. Maintain the site, excavations, and construction free of water. Dispose of rainwater in a lawful manner that will not result in flooding Project or adjoining properties or endanger permanent Work or temporary facilities.

D. Temporary Enclosures: Provide temporary enclosures for protection of construction, in progress and completed, from exposure, foul weather, other construction operations, and similar activities.

1. Where heat is needed and the permanent building enclosure is not complete, provide temporary enclosures where there is no other provision for containment of heat. Coordinate enclosure with ventilating and material drying or curing requirements to avoid dangerous conditions and effects.
2. Install tarpaulins securely, with incombustible framing and other materials. Close openings of 25 sq. ft. (2.3 sq. m) or less with plywood or similar materials.
3. Close openings through floor or roof decks and horizontal surfaces with load-bearing construction.

E. Project Identification and Temporary Signs: Prepare project identification and other signs. Install

signs where required to inform the public and persons seeking entrance to the Project and to provide directional assistance to persons required to detour around the construction areas. Support on posts or framing of preservative-treated wood or steel. Do not permit installation of any other additional or unauthorized signs.

1. Temporary Signs: Prepare signs to provide directional information to construction personnel and visitors.
2. Maintain and touch-up signs so they are legible at all times.

F. Collection and Disposal of Waste: Collect waste from construction areas and elsewhere daily. Comply with requirements of NFPA 241 for removal of combustible waste material and debris. Enforce requirements strictly. Do not hold materials more than 7 days during normal weather or 3 days when the temperature is expected to rise above 80 deg F (27 deg C). Handle hazardous, dangerous, or unsanitary waste materials separately from other waste by containerizing properly. Dispose of material lawfully.

1. Adjacent building dumpsters shall NOT be used for the disposal of construction debris.
2. Disposal of any debris related to this project into adjacent office building facilities or into any other adjacent building facilities shall result in the cost of removal being billed to the Contractor.

G. Lifts and Hoists: Provide facilities necessary for hoisting materials and personnel.

1. Truck cranes and similar devices used for hoisting materials are considered “tools and equipment” and not temporary facilities.

3.4 SECURITY AND PROTECTION FACILITIES INSTALLATION

A. Protection of Existing Facilities: Protect existing vegetation, equipment, structures, utilities, and other improvements at Project site and on adjacent properties, except those indicated to be removed or altered. Repair damage to existing facilities.

B. Environmental Protection: Provide protection, operate temporary facilities, and conduct construction in ways and by methods that comply with environmental regulations, and minimize the possibility that air, waterways, and subsoil might be contaminated or polluted or that other undesirable effects might result. Avoid use of tools and equipment that produce harmful noise. Restrict use of other loud noise-making tools and equipment to hours that will minimize complaints from persons or firms near the site.

C. Temporary Erosion and Sedimentation Control: Provide measures to prevent soil erosion and discharge of soil-bearing water runoff and airborne dust to adjacent properties and walkways, according to erosion and sedimentation control Drawings or requirements of authorities having jurisdiction, whichever is more stringent.

1. Verify that flows of water redirected from construction areas or generated by construction activity do not enter or cross tree-or plant protection zones.
2. Inspect, repair, and maintain erosion-and sedimentation-control measures during construction until permanent vegetation has been established.
3. Clean, repair, and restore adjoining properties and roads affected by erosion and sedimentation from Project site during the course of the Project.
4. Remove erosion and sedimentation controls and restore and stabilize areas disturbed during removal.

D. Stormwater Control: Comply with authorities having jurisdiction. Provide barriers in and around excavations and subgrade construction to prevent flooding by runoff of stormwater from heavy rains. Comply with requirements specified in Division 2 Section “Site Clearing.”

E. Tree and Plant Protection: Install temporary fencing located as indicated or outside the drip line of trees to protect vegetation from damage from construction operations. Protect tree root systems from damage, flooding, and erosion.

F. Except for use of permanent fire protection as soon as available, do not change over from use of temporary security and protection facilities to permanent facilities until Substantial Completion, or longer, as requested by the Architect.

G. Temporary Fire Protection: Until fire-protection needs are supplied by permanent facilities, install and maintain temporary fire-protection facilities of the types needed to protect against reasonably predictable and controllable fire losses. Comply with NFPA 10 "Standard for Portable Fire Extinguishers" and NFPA 241 "Standard for Safeguarding Construction, Alterations, and Demolition Operations."

1. Locate fire extinguishers where convenient and effective for their intended purpose, but not less than one extinguisher on each floor at or near each usable stairwell.
2. Store combustible materials in containers in fire-safe locations.
3. Maintain unobstructed access to fire extinguishers, fire hydrants, temporary fire-protection facilities, stairways, and other access routes for fighting fires. Prohibit smoking in hazardous fire-exposure areas.
4. Provide supervision of welding operations, combustion-type temporary heating units, and similar sources of fire ignition.

H. Permanent Fire Protection: At the earliest feasible date in each area of the Project, complete installation of the permanent fire-protection facility, including connected services, and place into operation and use. Instruct key personnel on use of facilities.

I. Enclosure Fencing: Extent of perimeter enclosure fencing shall be at Contractor’s option. If fencing is utilized, furnish and install site enclosure fence in a manner that will prevent people and animals from easily entering site except by entrance gates.

1. Extent of Fence: As determined by Contractor.
2. If Contractor elects to utilize opaque woven fabric as sightproof fencing. Fabric shall be permanently attached at all points and remains secure and taught.

a. Fabric shall not be allowed to have any message or text beyond that of product manufacturer or other text as approved by the Architect and Owner.
b. Contractor and Architects logo shall be incorporated into fence fabric printing.

1) Camera ready art work shall be provided for Architects logo

3. Contractor shall immediately replace any component that is damaged, removed, or lost due to theft, ultraviolet degradation or removal by any means.

J. Barricades, Warning Signs, and Lights: Comply with standards and code requirements for erection of structurally adequate barricades. Paint with appropriate colors, graphics, and warning signs to inform personnel and the public of the hazard being protected against. Where appropriate and needed, provide lighting, including flashing red or amber lights.

K. Temporary Enclosures: Provide temporary enclosures for protection of existing construction to remain and new construction in progress, from exposure, foul weather, other construction operations, and similar activities. Provide temporary weathertight enclosure for building exterior.

3.5 OPERATION, TERMINATION, AND REMOVAL

A. Supervision: Enforce strict discipline in use of temporary facilities. Limit availability of temporary facilities to essential and intended uses to minimize waste and abuse.

B. Maintenance: Maintain facilities in good operating condition until removal. Protect from damage by freezing temperatures and similar elements.

1. Maintain operation of temporary enclosures, heating, cooling, humidity control, ventilation, and similar facilities on a 24-hour basis where required to achieve indicated results and to avoid possibility of damage.
2. Protection: Prevent water-filled piping from freezing. Maintain markers for underground lines. Protect from damage during excavation operations.

C. Termination and Removal: Unless the Architect requests that it be maintained longer, remove each temporary facility when the need has ended, when replaced by authorized use of a permanent facility, or no later than Substantial Completion. Complete or, if necessary, restore permanent construction that may have been delayed because of interference with the temporary facility. Repair damaged Work, clean exposed surfaces, and replace construction that cannot be satisfactorily repaired.

1. Materials and facilities that constitute temporary facilities are the Contractor's property. The Owner reserves the right to take possession of project identification signs.
2. Remove temporary roads and paved areas not intended for or acceptable for integration into permanent construction. Where area is intended for landscape development, remove soil and aggregate fill that do not comply with requirements for fill or subsoil. Remove materials contaminated with road oil, asphalt, and other petrochemical products or compounds, and other substances that might impair growth of plant materials or lawns. Repair or replace street paving, curbs, and sidewalks, at temporary entrances, as required by authorities having jurisdiction.
3. At Substantial Completion, clean and renovate permanent facilities used during the construction period including, but not limited to, the following:

   a. Replace significantly worn parts and parts subject to unusual operating conditions.
   b. Replace lamps burned out or noticeably dimmed by hours of use.

4. Comply with final cleaning requirements specified in Section 01 77 00 “Closeout Procedures.”

END OF SECTION 01 50 00

Section 01 56 50 - Environmental Protection

PART 1 - GENERAL

1.1 RELATED DOCUMENTS

A. Drawings and general provisions of the Contract, including General and Supplementary Conditions and other Division 01 Specification Sections, apply to this Section.

1.2 SUMMARY

A. This Section establishes basic requirements governing environmental protection efforts during the course of Construction.

1.3 DEFINITIONS

A. Definitions used in this Article are not intended to change the meaning of other terms used in the Contract Documents, such as “specialties”, “systems,” “structures,” “finishes,” “accessories,” and similar terms. Such terms are self explanatory and have well recognized meanings in the construction industry.

1. “Environmental Pollution” is defined as the presence of chemical, physical, or biological elements or agents which adversely affect human health or welfare; unfavorably alter ecological balances or importance to human life; affect other species of importance to man; or degrade the utility of the environment for aesthetic or recreational purposes. The control of environmental pollution requires consideration of, but is not limited to, air, water, and land, and involves noise, solid and liquid waste management and management of radioactive and other hazardous materials.

1.4 APPLICABLE REGULATIONS

A. Pollution Control and Abatement: To the fullest extent possible, provide for the abatement and control of any environmental pollution arising from the construction activities of the Contractor and any subcontractors in the performance of this Contract. Comply with all applicable federal, state, and local laws, and regulations concerning environmental pollution control and abatement.

1.5 PROTECTION OF LAND RESOURCES

A. It is intended that the land resources within the Project boundaries and outside of the limits of permanent work performed under this Contract be preserved in their present condition or be restored to a condition after completion of construction that will not appear to be unnatural and not distract from the appearance of the Project.

B. Insofar as possible, the Contractor shall confine construction activities to areas defined by the plans or specifications, to areas to be cleared for other operations, or to approved waste areas.

C. In all instances the restored areas shall be well drained to prevent the accumulation of standing water.

D. Contractor shall not deface, injure, or destroy trees or shrubs, nor remove or cut them without special authority.

1. Restoration of Landscape Damage: Any trees or other landscape feature scarred or damaged by the Contractor's equipment or operations, shall be restored as nearly as possible to its original condition at the Contractor's expense. The Architect/.Engineer will decide what method of restoration shall be used and whether damaged trees shall be treated and healed, or removed and replaced.
2. Post-Construction Cleanup or Obliterations: The Contractor shall remove all signs of temporary construction facilities used in the course of the Project. Any disturbed areas shall be graded and filled as required, and topsoil shall be spread to a depth of approximately four inches over the entire repaired area and the entire area shall be seeded. Restoration to original contours is required unless otherwise directed by the Architect.

1.6 PROTECTION OF WATER RESOURCES

A. The Contractor shall not pollute streams, drainage channels, or drainage structures with fuels, oils, bitumens, calcium chloride, acids, paint residue, or other harmful materials. It is the responsibility of the Contractor to monitor and investigate and comply with all applicable federal, state, parish, and municipal laws concerning pollution of water streams.

B. In no event shall paint residue, cleaning solutions, pollution, or other pollutants be deposited into any catch basin, open ditch, or any structure or subsurface drainage system component.

1. Spillages: Special measures shall be undertaken to prevent chemicals, fuels, oils, grease, waste washings, and paint components from entering surface or ground waters. In the event of any spillages, Contractor shall take immediate containment measures to prevent the spill from entering the drainage system.

1.7 DISPOSAL OF REMOVED MATERIALS

A. All removed materials shall be disposed of off site and shall be in accordance with all applicable federal, state, parish, and municipal laws.

PART 2 - PRODUCTS (Not Applicable)

PART 3 - EXECUTION (Not Applicable)

END OF SECTION 01 56 50

Section 01 60 00 - Product Requirements

PART 1 - GENERAL

1.1 RELATED DOCUMENTS

A. Drawings and general provisions of the Contract, including General and Supplementary Conditions and other Division 01 Specification Sections, apply to this Section.

1.2 SUMMARY

A. This Section includes administrative and procedural requirements governing the Contractor's selection of products for use in the Project; product delivery, storage and handling; manufacturer' standard warranties on products; special warranties; product substitutions; and comparable products..

B. Related Sections: The following Sections contain requirements that relate to this Section:

1. Division 01 Section Closeout Procedures" for submitting warranties for Contract closeout.
2. Divisions 02 thru 49 Sections for specific requirements for warranties on products and installations specified to be warranted.

1.3 DEFINITIONS

A. Definitions used in this Article are not intended to change the meaning of other terms used in the Contract Documents, such as "specialties," "systems," "structure," "finishes," "accessories," and similar terms. Such terms are self-explanatory and have well-recognized meanings in the construction industry.

B. Products: Items purchased for incorporation in the Work, whether purchased for the Project or taken from previously purchased stock. The term "product" includes the terms "material," "equipment," "system," and terms of similar intent.

1. Named Products: Items identified by manufacturer's product name, including make or model number or other designation shown or listed in manufacturer's published product literature, that is current as of date of the Contract Documents.
2. New Products: Items that have not previously been incorporated into another project or facility, except that products consisting of recycled-content materials are allowed, unless explicitly stated otherwise. Products salvaged or recycled from other projects are not considered new products.
3. Comparable Product: Product that is demonstrated and approved through submittal process, or where indicated as a product substitution, to have the indicated qualities related to type, function, dimension, in-service performance, physical properties, appearance, and other characteristics that equal or exceed those of specified product.

C. Materials: Products substantially shaped, cut, worked, mixed, finished, refined or otherwise fabricated, processed, or installed to form a part of the Work.

D. Equipment: Products with operational parts, whether motorized or manually operated, that requires service connections, such as wiring or piping.

E. Substitutions: Changes in products, materials, equipment, and methods of construction from those required by the Contract Documents and proposed by Contractor.

1. Basis-of-Design Product Specification: Where a specific manufacturer's product is named and accompanied by the words "basis of design," including make or model number or other designation, to establish the significant qualities related to type, function, dimension, in-service performance, physical properties, appearance, and other characteristics for purposes of evaluating comparable products of other named manufacturers.

1.4 QUALITY ASSURANCE

A. Source Limitations: To the fullest extent possible, provide products of the same kind from a single source.

B. Compatibility of Options: When the Contractor is given the option of selecting between 2 or more products for use on the Project, the product selected shall be compatible with products previously selected, even if previously selected products were also options.

C. Nameplates: Except for required labels and operating data, do not attach or imprint manufacturer's or producer's nameplates or trademarks on exposed surfaces of products that will be exposed to view in occupied spaces or on the exterior.

1. Labels: Locate required product labels and stamps on concealed surfaces or, where required for observation after installation, on accessible surfaces that are not conspicuous.
2. Equipment Nameplates: Provide a permanent nameplate on each item of service-connected or power-operated equipment. Locate on an easily accessible surface that is inconspicuous in occupied spaces. The nameplate shall contain the following information and other essential operating data:

a. Name of product and manufacturer.
b. Model and serial number.
c. Capacity.
d. Speed.
e. Ratings.

1.5 REUSE OF EXISTING MATERIALS

A. Except as specifically indicated or specified, materials, and equipment removed from work in progress shall not be used in the completed Work.

B. For materials and equipment specifically indicated or specified to be reused in the work:

1. Use special care in removal, handling, storage, and reinstallation, to assure proper function in the completed work.
2. Arrange for transportation, storage, and handling of products which requires off-site storage, restoration, or renovation. Pay all costs for such work.

1.6 PRODUCT DELIVERY, STORAGE, AND HANDLING

A. Deliver, store, and handle products according to the manufacturer's recommendations, using means and methods that will prevent damage, deterioration, and loss, including theft.

B. Delivery and Handling:

1. Schedule delivery to minimize long-term storage at the site and to prevent overcrowding of construction spaces.
2. Coordinate delivery with installation time to assure minimum holding time for items that are flammable, hazardous, easily damaged, or sensitive to deterioration, theft, and other losses.
3. Deliver products to the site in an undamaged condition in the manufacturer's original sealed container or other packaging system, complete with labels and instructions for handling, storing, unpacking, protecting, and installing.
4. Inspect products upon delivery to ensure compliance with the Contract Documents and to ensure that products are undamaged and properly protected.

C. Storage:

1. Store products at the site in a manner that will facilitate inspection and measurement of quantity or counting of units.
2. Store heavy materials away from the Project structure in a manner that will not endanger the supporting construction.
3. Store products subject to damage by the elements above ground, under cover in a weathertight enclosure, with ventilation adequate to prevent condensation. Maintain temperature and humidity within range required by manufacturer's instructions.
4. Store cementitious products and materials on elevated platforms.
5. Store foam plastic from exposure to sunlight, except to extent necessary for period of installation and concealment.
6. Comply with product manufacturer’s written instructions for temperature, humidity, ventilation, and weather-protection requirements for storage0.
7. Protect stored products from damage and liquids from freezing.

1.7 PRODUCT WARRANTIES

A. Warranties specified in other Sections shall be in addition to, and run concurrent with, other warranties required by the Contract Documents. Manufacturer's disclaimers and limitations on product warranties do not relieve Contractor of obligations under requirements of the Contract Documents.

1. Manufacturer's Warranty: Preprinted written warranty published by individual manufacturer for a particular product and specifically endorsed by manufacturer to Owner.
2. Special Warranty: Written warranty required by or incorporated into the Contract Documents, either to extend time limit provided by manufacturer's warranty or to provide more rights for Owner.

B. Special Warranties: Prepare a written document that contains appropriate terms and identification, ready for execution. Submit a draft for approval before final execution.

1. Manufacturer's Standard Form: Modified to include Project-specific information and properly executed.
2. Specified Form: When specified forms are included with the Specifications, prepare a written document using appropriate form properly executed.
3. Refer to Divisions 2 through 16 Sections for specific content requirements and particular requirements for submitting special warranties.

C. Submittal Time: Comply with requirements in Division 01 Section "Closeout Procedures."

PART 2 - PRODUCTS

2.1 PRODUCT SELECTION PROCEDURES

A. General Product Requirements: Provide products that comply with the Contract Documents, that are undamaged and, unless otherwise indicated, new at the time of installation.

1. Provide products complete with accessories, trim, finish, safety guards, and other devices and details needed for a complete installation and the intended use and effect.
2. Standard Products: Where available, provide standard products of types that have been produced and used successfully in similar situations on other projects.
3. Owner reserves the right to limit selection to products with warranties not in conflict with requirements of the Contract Documents.
4. Where products are accompanied by the term "as selected," Architect will make selection.
5. Where products are accompanied by the term "match sample," sample to be matched is

Architect's.

6. Descriptive, performance, and reference standard requirements in the Specifications establish "salient characteristics" of products.
7. Or Equal: Where products are specified by name and accompanied by the term "or equal" or "or approved equal" or "or approved," comply with provisions in Part 2 "Comparable Products" Article to obtain approval for use of an unnamed product. the term "or equal" or "or approved equal," it is only to denote the quality standard of the product desired and in no way shall the Bidder be restricted to the specific brand, make, manufacturer, or specification named. They are used only to set forth and convey to prospective Bidders the general style, type, character, and quality of products desired; prior approved equivalent products shall be acceptable.

B. Product Selection Procedures: The Contract Documents and governing regulations govern product selection. Procedures governing product selection include the following:

1. Semi-proprietary Specification Requirements: Where Specifications name 2 or more products by certain brand, make, or manufacturer provide 1 of the products indicated that complies with requirements.
2. Nonproprietary Specifications: When Specifications list products or manufacturers that are available and may be incorporated in the Work, but do not restrict the Contractor to use of these products only, the Contractor may propose any available product that complies with Contract requirements. Comply with Contract Document provisions concerning "substitutions" to obtain approval for use of an unnamed product.
3. Descriptive Specification Requirements: Where Specifications describe a product or assembly, listing exact characteristics required, with or without use of a brand or trade name, provide a product or assembly that provides the characteristics and otherwise complies with Contract requirements.
4. Performance Specification Requirements: Where Specifications require compliance with performance requirements, provide products that comply with these requirements and are recommended by the manufacturer for the application indicated.

    a. Manufacturer's recommendations may be contained in published product literature or by the manufacturer's certification of performance.

5. Compliance with Standards, Codes, and Regulations: Where Specifications only require compliance with an imposed code, standard, or regulation, select a product that complies with the standards, codes, or regulations specified.

    a. Any reference to standards (such as ASTM, ANSI, ACI, etc.), where the date is not specified, shall mean the latest edition of such standards published prior to the date of the Specifications, in accordance with the abbreviation referred to in the Technical Provisions. Where such a reference is made, the applicable standard is hereby made a part of the Specification Section which refers to it to the same extent as if it was written out in that Specification Section in full.
6. Basis of Design Product: Where Specifications name a product and include a list of manufacturers, provide the specified product or a comparable product by one of the other named manufacturers. Drawings and Specifications indicate sizes, profiles, dimensions, and other characteristics that are based on the product named. Comply with provisions in Part 2 "Comparable Products" Article for consideration of an unnamed product by the other named manufacturers.
7. Visual Matching: Where Specifications require matching an established Sample, select a product that complies with requirements and matches Architect’s sample. Architect's decision will be final on whether a proposed product matches satisfactorily.

8. Visual Selection: Where specified product requirements include the phrase "... as selected from manufacturer's standard colors, patterns, textures ..." or a similar phrase, select a product and manufacturer that complies with other specified requirements.

   a. Standard Range: Where Specifications include the phrase "standard range of colors, patterns, textures" or similar phrase, Architect will select color, pattern, density, or texture from manufacturer's product line that does not include premium items.
   b. Full Range: Where Specifications include the phrase "full range of colors, patterns, textures" or similar phrase, Architect will select color, pattern, density, or texture from manufacturer's product line that includes both standard and premium items.

2.2 ASBESTOS AND LEAD PAINT PROHIBITIONS

A. General: Materials containing asbestos and paint products containing lead based components shall not be permitted for use on this Project.

2.3 PRODUCT SUBSTITUTIONS

A. Substitution Requests: Substitutions are only allowed by approval prior to Bid Date as stipulated in the Instructions To Bidders.
B. Submit a separate request to the Architect for each product, supported with complete data, with drawings and samples as appropriate, including the following items:

   1. Comparison of the qualities of the proposed substitutions with that specified.
   2. Changes required in other elements of the Work because of the substitution.

C. Contractor's Requests: A request for a product substitution shall constitute a representation that Contractor:

   1. Has investigated the proposed product and determined that it is equal to or superior in all respects to that specified.
   2. Will provide the same warranties for the substitution as for the Products specified.
   3. Will coordinate the installation of an accepted substitution into the Work, and make such other changes as may be required to make the Work complete in all respects.
   4. Waives all claims for additional costs, under his responsibility, which may subsequently become apparent.
   5. Has investigated the substitution and the requested substitution has been fully coordinated and is compatible with other portions of the Work.

2.4 COMPARABLE PRODUCTS

A. Conditions: Architect will consider Contractor's request for comparable product when the following conditions are satisfied. If the following conditions are not satisfied, Architect will return requests without action, except to record noncompliance with these requirements:

   1. Evidence that the proposed product does not require extensive revisions to the Contract Documents, that it is consistent with the Contract Documents and will produce the indicated results, and that it is compatible with other portions of the Work.
   2. Detailed comparison of significant qualities of proposed product with those named in the Specifications. Significant qualities include attributes such as performance, weight, size, durability, visual effect, and specific features and requirements indicated.
   3. Evidence that proposed product provides specified warranty.
   4. List of similar installations for completed projects with project names and addresses and names and addresses of architects and owners, if requested.
   5. Samples, if requested.

PART 3 - EXECUTION

3.1 INSTALLATION OF PRODUCTS

A. Comply with manufacturer's instructions and recommendations for installation of products in the applications indicated. Anchor each product securely in place, accurately located and aligned with other Work.

1. Clean exposed surfaces and protect as necessary to ensure freedom from damage and deterioration at time of Substantial Completion.

END OF SECTION 01 60 00

Section 01 73 00 - Execution

PART 1 - GENERAL

1.1 RELATED DOCUMENTS

A. Drawings and general provisions of the Contract, including General and Supplementary Conditions and other Division 01 Specification Sections, apply to this Section.

1.2 SUMMARY

A. General: This Section specifies general procedural requirements governing execution of the Work including , but not limited to, the following:

1. Construction layout.
2. General installation of products.
3. Progress cleaning.
4. Starting and adjusting.
5. Protection of installed construction.
6. Correction of the Work.

B. Related Sections include the following:

1. Division 01 Section "Project Management and Coordination" for procedures for coordinating field engineering with other construction activities.
2. Division 01 Section "Submittal Procedures" for submitting surveys.
3. Division 01 Section "Cutting and Patching" for procedural requirements for cutting and patching necessary for the installation or performance of other components of the Work.

PART 2 - PRODUCTS (Not Applicable)

PART 3 - EXECUTION

3.1 EXAMINATION

A. Existing Conditions: The existence and location of site improvements, utilities, and other construction indicated as existing are not guaranteed. Before beginning work, investigate and verify the existence and location of mechanical and electrical systems and other construction affecting the Work.

1. Before construction, verify the location and points of connection of utility services.

B. Identification: The Owner will identify existing control points and property line corner stakes.

3.2 PREPARATION

A. Field Measurements: Take field measurements as required to fit the Work properly. Recheck measurements before installing each product. Where portions of the Work are indicated to fit to other construction, verify dimensions of other construction by field measurements before fabrication. Coordinate fabrication schedule with construction progress to avoid delaying the Work.

B. Examination and Acceptance of Conditions: Before proceeding with each component of Work, examine substrates, areas, and conditions, with Installer or Applicator present where indicated, for compliance with requirements for installation tolerances and other conditions affecting performance. Record observations.

C. Proceed with installation only after unsatisfactory conditions have been corrected. Proceeding with the Work indicates acceptance of surfaces and conditions.
D. Space Requirements: Verify space requirements and dimensions of items shown diagrammatically on Drawings.
E. Review of Contract Documents and Field Conditions: Immediately on discovery of the need for clarification of the Contract Documents, submit a request for information to Architect. Include a detailed description of problem encountered, together with recommendations for changing the Contract Documents.

3.3 PERFORMANCE

A. Verification: Before proceeding to lay out the Work, verify layout information shown on Drawings, in relation to the property survey and existing benchmarks. If discrepancies are discovered, notify Architect promptly.

3.4 INSTALLATION

A. General: Locate the Work and components of the Work accurately, in correct alignment and elevation, as indicated.
B. Comply with manufacturer's written instructions and recommendations for installing products in applications indicated.
C. Install products at the time and under conditions that will ensure the best possible results. Maintain conditions required for product performance until Substantial Completion.
D. Conduct construction operations so no part of the Work is subjected to damaging operations or loading in excess of that expected during normal conditions of occupancy.
E. Tools and Equipment: Do not use tools or equipment that produce harmful noise levels.
F. Templates: Obtain and distribute to the parties involved templates for work specified to be factory prepared and field installed. Check Shop Drawings of other work to confirm that adequate provisions are made for locating and installing products to comply with indicated requirements.
G. Anchors and Fasteners: Provide anchors and fasteners as required to anchor each component securely in place, accurately located and aligned with other portions of the Work.

1. Mounting Heights: Where mounting heights are not indicated, mount components at heights directed by Architect.
2. Allow for building movement, including thermal expansion and contraction.
3. Coordinate installation of anchorages. Furnish setting drawings, templates, and directions for installing anchorages, including sleeves, concrete inserts, anchor bolts, and items with integral anchors, that are to be embedded in concrete or masonry. Deliver such items to Project site in time for installation.

H. Joints: Make joints of uniform width. Where joint locations in exposed work are not indicated, arrange joints for the best visual effect. Fit exposed connections together to form hairline joints.
I. Hazardous Materials: Use products, cleaners, and installation materials that are not considered hazardous.

3.5 PROGRESS CLEANING

A. General: Clean Project site and work areas daily, including common areas. Coordinate progress cleaning for joint-use areas where more than one installer has worked. Enforce requirements strictly. Dispose of materials lawfully.

1. Comply with requirements in NFPA 241 for removal of combustible waste materials and debris.
2. Do not hold materials more than 7 days during normal weather or 3 days if the temperature is expected to rise above 80 deg F27 deg C.
3. Containerize hazardous and unsanitary waste materials separately from other waste. Mark containers appropriately and dispose of legally, according to regulations.

B. Site: Maintain Project site free of waste materials and debris.
C. Work Areas: Clean areas where work is in progress to the level of cleanliness necessary for proper execution of the Work.

1. Remove liquid spills promptly.
2. Where dust would impair proper execution of the Work, broom-clean or vacuum the entire work area, as appropriate.

D. Installed Work: Keep installed work clean. Clean installed surfaces according to written instructions of manufacturer or fabricator of product installed, using only cleaning materials specifically recommended. If specific cleaning materials are not recommended, use cleaning materials that are not hazardous to health or property and that will not damage exposed surfaces.
E. Concealed Spaces: Remove debris from concealed spaces before enclosing the space.
F. Exposed Surfaces in Finished Areas: Clean exposed surfaces and protect as necessary to ensure freedom from damage and deterioration at time of Substantial Completion.
G. Waste Disposal: Burying or burning waste materials on-site will not be permitted. Washing waste materials down sewers or into waterways will not be permitted.
H. During handling and installation, clean and protect construction in progress and adjoining materials already in place. Apply protective covering where required to ensure protection from damage or deterioration at Substantial Completion.
I. Clean and provide maintenance on completed construction as frequently as necessary through the remainder of the construction period. Adjust and lubricate operable components to ensure operability without damaging effects.
J. Limiting Exposures: Supervise construction operations to assure that no part of the construction, completed or in progress, is subject to harmful, dangerous, damaging, or otherwise deleterious exposure during the construction period.

3.6 PROTECTION OF INSTALLED CONSTRUCTION

A. Provide final protection and maintain conditions that ensure installed Work is without damage or deterioration at time of Substantial Completion.
B. Comply with manufacturer's written instructions for temperature and relative humidity.

3.7 CORRECTION OF THE WORK

A. Repair or remove and replace defective construction. Restore damaged substrates and finishes. Comply with requirements in Division 1 Section "Cutting and Patching."

1. Repairing includes replacing defective parts, refinishing damaged surfaces, touching up with matching materials, and properly adjusting operating equipment.

B. Restore permanent facilities used during construction to their specified condition.
C. Remove and replace damaged surfaces that are exposed to view if surfaces cannot be repaired without visible evidence of repair.
D. Repair components that do not operate properly. Remove and replace operating components that cannot be repaired.

END OF SECTION 01 73 00

Section 01 73 29 - Cutting and Patching

PART 1 - GENERAL

1.1 RELATED DOCUMENTS

A. Drawings and general provisions of Contract, including General and Supplementary Conditions and other Division 01 Specification Sections, apply to this Section.

1.2 SUMMARY

A. This Section specifies administrative and procedural requirements for cutting and patching.
B. Related Sections: The following Sections contain requirements that relate to this Section:

1. Division 01 Section "Project Coordination" for procedures for coordinating cutting and patching with other construction activities.
2. Division 01 Section "Mechanical and Electrical Coordination" for procedures for coordinating mechanical and electrical cutting and patching with other construction activities.
3. Divisions 02 through 49 Sections for specific requirements and limitations applicable to cutting and patching individual parts of the Work.
4. Refer to Division 07 Section “Penetration Firestopping” for patching penetrations in fire-rated construction.

1.3 DEFINITIONS

A. Cutting: Removal of in-place construction necessary to permit installation or performance of other Work.
B. Patching: Fitting and repair work required to restore surfaces to original conditions after installation of other Work.

1.4 QUALITY ASSURANCE

A. Requirements for Structural Work: Shore, brace, and support structural elements during cutting and patching. Do not cut and patch structural elements in a manner that would reduce their load-carrying capacity or load-deflection ratio.
B. Operational and Safety Limitations: Do not cut and patch operating elements or safety related components in a manner that would result in reducing their capacity to perform as intended, or result in increased maintenance, or decreased operational life or safety.
C. Miscellaneous Elements: Do not cut and patch miscellaneous elements or related components in a manner that could change their load-carrying capacity, that results in reducing their capacity to perform as intended, or that results in increased maintenance or decreased operational life or safety
D. Visual Requirements: Do not cut and patch construction exposed on the exterior or in occupied spaces, in a manner that would, in the Architect's opinion, reduce the building's aesthetic qualities, or result in visual evidence of cutting and patching. Remove and replace Work cut and patched in a visually unsatisfactory manner.

1.5 WARRANTY

A. Existing Warranties: Remove, replace, patch, and repair materials and surfaces cut or damaged during cutting and patching operations, by methods and with materials so as not to void existing warranties.

PART 2 - PRODUCTS

2.1 MATERIALS

A. General: Comply with requirement specified in other Sections.

B. In-Place Materials: Use materials for patching that are identical to existing materials. If identical materials are not available or cannot be used where exposed surfaces are involved, use materials that match existing adjacent surfaces to the fullest extent possible with regard to visual effect. Use materials whose installed performance will equal or surpass that of existing materials.

PART 3 - EXECUTION

3.1 INSPECTION

A. Examine surfaces to be cut and patched and conditions under which cutting and patching is to be performed before cutting. If unsafe or unsatisfactory conditions are encountered, take corrective action before proceeding.

1. Before proceeding, meet at the site with parties involved in cutting and patching, including mechanical and electrical trades. Review areas of potential interference and conflict. Coordinate procedures and resolve potential conflicts before proceeding.

3.2 PREPARATION

A. Temporary Support: Provide temporary support of work to be cut.

B. Protection: Protect existing construction during cutting and patching to prevent damage. Provide protection from adverse weather conditions for portions of the Project that might be exposed during cutting and patching operations.

C. Adjoining Areas: Avoid interference with use of adjoining areas or interruption of free passage to adjoining areas.

D. Existing Utility Services and Mechanical/Electrical Systems: Avoid cutting existing pipe, conduit, or ductwork serving the building but scheduled to be removed or relocated until provisions have been made to bypass them.

3.3 PERFORMANCE

A. General: Employ skilled workmen to perform cutting and patching. Proceed with cutting and patching at the earliest feasible time and complete without delay.

1. Cut in-place construction to provide for installation of other components or performance of other construction activities and the subsequent fitting and patching required to restore surfaces to their original condition.

B. Cutting: Cut in-place construction using methods least likely to damage elements to be retained or adjoining construction.

1. In general, where cutting is required use hand or small power tools designed for sawing or grinding, not hammering and chopping. Cut holes and slots neatly to size required with minimum disturbance of adjacent surfaces. Temporarily cover openings when not in use.
2. To avoid marring existing finished surfaces, cut or drill from the exposed or finished side into concealed surfaces.
3. Cut through concrete and masonry using a cutting machine such as a carborundum saw or diamond core drill.
4. By-pass utility services such as pipe or conduit, before cutting, where services are shown or required to be removed, relocated or abandoned. Cut-off pipe or conduit in walls or partitions to be removed. Cap, valve or plug and seal the remaining portion of pipe or conduit to prevent entrance of moisture or other foreign matter after by-passing and cutting.

C. Excavating and Backfilling: Comply with requirements in applicable Division 31 Sections where required by cutting and patching operations.

D. Patching: Patch construction by filling, repairing, refinishing, closing up, and similar operations following performance of other Work. Patch with durable seams that are as invisible as possible. Comply with specified tolerances. Provide materials and comply with installation requirements specified in other Sections.

1. Inspection: Where feasible, inspect and test patched areas to demonstrate integrity of the installation.
2. Exposed Finishes: Restore exposed finishes of patched areas and extend finish restoration into retained adjoining construction in a manner that will eliminate evidence of patching and refinishing.

   a. Clean piping, conduit, and other similar features before applying paint or other finishing materials.
   b. Restore pipe covering to its original condition.

3. Exterior Building Enclosures: Patch components in a manner that restores enclosure to a weathertight condition.

3.4 CLEANING

A. Thoroughly clean areas and spaces where cutting and patching is performed or used as access. Remove completely paint, mortar, oils, putty and items of similar nature.

END OF SECTION 01 73 29

Section 01 77 00 - Closeout Procedures

PART 1 - GENERAL

1.1 RELATED DOCUMENTS

A. Drawings and general provisions of Contract, including General and Supplementary Conditions and other Division 01 Specification Sections, apply to this Section.

1.2 SUMMARY

A. This Section specifies administrative and procedural requirements for project closeout, including but not limited to:

1. Contractor's certifications relative to claimed status.
2. Substantial Completion Procedures
3. Final Completion procedures.
4. Warranties.
5. Final cleaning.
6. Repair of the Work

B. Related Sections include the following:

1. Division 01 Section "Payment Procedures" for requirements for Applications for Payment for Substantial and Final Completion.
2. Division 01 Section "Execution" for progress cleaning of Project site.
3. Division 01 Section "Operation and Maintenance Data" for operation and maintenance manual requirements.
4. Division 01 Section “Project Record Documents” for submitting Record Drawings, Record Specifications, and Record Product Data.
5. Division 01 Section "Demonstration and Training" for requirements for instructing Owner's personnel.
6. Divisions 2 through 49 Sections for specific closeout and special cleaning requirements for the Work in those Sections.

1.3 SUBSTANTIAL COMPLETION

A. Contractor's List of Incomplete Items: Prepare and submit a list of items to be completed and corrected (Contractor's punch list), indicating the value of each item on the list and reasons why the Work is incomplete.

B. Submittals Prior to Substantial Completion: Complete the following a minimum of 10 days prior to requesting inspection for determining date of Substantial Completion. List items below that are incomplete at time of request.

1. Certificates of Release: Obtain and submit releases from authorities having jurisdiction permitting Owner unrestricted use of the Work and access to services and utilities. Include occupancy permits, operating certificates, and similar releases.
2. Submit closeout submittals specified in other Division 01 Sections, including project record documents, operation and maintenance manuals, final completion construction photographic documentation, damage or settlement surveys, property surveys, and similar final record information.
3. Submit closeout submittals specified in individual Sections, including specific warranties, workmanship bonds, maintenance service agreements, final certifications, and similar documents.

4. Submit maintenance material submittals specified in individual Sections, including tools, spare parts, extra materials, and similar items, and deliver to location designated by Architect. Label with manufacturer's name and model number where applicable.
5. Submit test and balance reports.
6. Submit changeover information related to Owner's occupancy, use, operation, and maintenance.

C. Procedures Prior to Substantial Completion: Complete the following a minimum of 10 days prior to requesting inspection for determining date of Substantial Completion. List items below that are incomplete at time of request.

1. Schedule and coordinate required reviews and inspections by authorities having jurisdiction, including but not limited to, State Fire Marshal and other State agencies.
2. Advise Owner of pending insurance changeover requirements.
3. Make final changeover of permanent locks and deliver keys to Owner. Advise Owner's personnel of changeover in security provisions.
4. Complete startup and testing of systems and equipment.
5. Perform preventive maintenance on equipment used prior to Substantial Completion.
6. Instruct Owner's personnel in operation, adjustment, and maintenance of products, equipment, and systems. Submit demonstration and training video recordings specified in Section 01 79 00 "Demonstration and Training."
7. Advise Owner of changeover in heat and other utilities.
8. Participate with Owner in conducting inspection and walkthrough with local emergency responders.
9. Terminate and remove temporary facilities from Project site, along with mockups, construction tools, and similar elements.
10. Complete final cleaning requirements, including touchup painting.
11. Touch up and otherwise repair and restore marred exposed finishes to eliminate visual defects.

D. Review Procedures: Submit a written request for review to determine Substantial Completion, complete with associated copy of Contractor's Certification of Substantial Completion (copy enclosed herein) a minimum of 10 days prior to the date the work will be completed and ready for review. Upon receipt of the request, the Architect will either proceed with review or advise the Contractor of unfilled requirements. The Architect will prepare the Certificate of Substantial Completion following review, or advise the Contractor in writing of construction that must be completed or corrected before the certificate will be issued.

1. Should Architect and/or his Consultants be required to perform any re-reviews due to failure of the Work to comply with claims of status of completion made by the Contractor after the above re-review, the Owner shall compensate the Architect for such additional services in accordance with provisions found in Section SC - Supplementary Conditions.

   a. If the Architect does not find the work acceptable under the Contract Documents for Substantial Completion, the Architect shall make one additional inspection; if the work is still not acceptable, the Architect, and each of the Architect's principal consultants, shall be paid $175.00/hour for their time at the project site, for each additional inspection, to be withheld from the unpaid funds remaining in the Contract sum.
   b. Owner will deduct the amount of such compensation from the final payment to the Contractor.

2. Results of the completed review will form the basis of requirements for final acceptance.

1.4 FINAL ACCEPTANCE

A. Submittals Prior to Final Completion: Before requesting final inspection for determining final completion, complete the following:

1. Submit a final Application for Payment according to Section 01 29 00 "Payment Procedures."
2. Certified List of Incomplete Items: Submit certified copy of Architect's Substantial Completion inspection list of items to be completed or corrected (punch list), endorsed and dated by Architect. Certified copy of the list shall state that each item has been completed or otherwise resolved for acceptance.
3. Certificate of Insurance: Submit evidence of final, continuing insurance coverage complying with insurance requirements.
4. Submit consent of surety to final payment.
5. Submit a final liquidated damages settlement statement.
6. Submit pest-control final inspection report.

B. Review Procedure: On receipt of a written request for review for Final Acceptance, complete with associated copy of Contractor's Certification of Completion for Final Acceptance (copy enclosed herein), the Architect will either proceed with review or advise the Contractor of unfilled requirements. The Architect will re-review the Work upon receipt of notice that the Work, including listed items from Substantial Completion review, has been completed, except items whose completion has been delayed because of circumstances acceptable to the Architect.

1. Upon completion of review, the Architect will approve a Certificate of Final Payment, or advice the Contractor of Work that is incomplete or of obligations that have not been fulfilled but are required for final acceptance.
2. In the event that the Architect does not find the work acceptable under the Contract Documents, the Architect shall make one additional review.

a. Should Architect and/or his Consultants be required to perform any re-review due to failure of the Work to comply with claims of status of completion made by the Contractor after the above re -review, the Owner shall compensate the Architect for such additional services in accordance with provisions found in Section SC - Supplementary Conditions.

1) If the Architect does not find the work acceptable under the Contract Documents for Final Completion, the Architect shall make one additional inspection; if the work is still not acceptable, the Architect, and each of the Architect's principal consultants, shall be paid $175.00/hour for their time at the project site, for each additional inspection, to be withheld from the unpaid funds remaining in the Contract sum.

1) Owner will deduct the amount of such compensation from the final payment to the Contractor.

1.5 WARRANTIES

A. Submittal Time: Submit written warranties on request of Architect for designated portions of the Work where commencement of warranties other than date of Substantial Completion is indicated.

B. Organize warranty documents into an orderly sequence based on the table of contents of the Project Manual.

1. Bind warranties and bonds in heavy-duty, 3-ring, vinyl-covered, loose-leaf binders, thickness as necessary to accommodate contents, and sized to receive 8-1/2-by-11-inch215-by-280-mm paper.

2. Provide heavy paper dividers with plastic-covered tabs for each separate warranty. Mark tab to identify the product or installation. Provide a typed description of the product or installation, including the name of the product and the name, address, and telephone number of Installer.
3. Identify each binder on the front and spine with the typed or printed title "WARRANTIES," Project name, and name of Contractor.
4. Provide additional copies of each warranty to include in operation and maintenance manuals.

PART 2 - PRODUCTS

2.1 MATERIALS

A. Cleaning Agents: Use cleaning materials and agents recommended by manufacturer or fabricator of the surface to be cleaned. Do not use cleaning agents that are potentially hazardous to health or property or that might damage finished surfaces.

PART 3 - EXECUTION

3.1 FINAL CLEANING

A. General: Execute cleaning, during progress of the Work, and at completion of the Work, as required by Conditions of the Contract. For cleaning of specific products or work, refer to the Specification Section for that Work.

B. Cleaning: Employ experienced workers or professional cleaners for final cleaning. Clean each surface or unit to condition expected in an average commercial building cleaning and maintenance program. Comply with manufacturer's written instructions.

1. Complete the following cleaning operations before requesting inspection for certification of Substantial Completion for entire Project or for a portion of Project:

a. Clean Project site, yard, and grounds, in areas disturbed by construction activities, including landscape development areas, of rubbish, waste material, litter, and other foreign substances.
b. Sweep paved areas broom clean. Remove petrochemical spills, stains, and other foreign deposits.
c. Rake grounds that are neither planted nor paved to a smooth, even-textured surface.
d. Remove tools, construction equipment, machinery, and surplus material from Project site.
e. Clean exposed exterior and interior hard-surfaced finishes to a dirt-free condition, free of stains, films, and similar foreign substances. Avoid disturbing natural weathering of exterior surfaces. Restore reflective surfaces to their original condition.
f. Remove debris and surface dust from limited access spaces, including roofs, plenums, shafts, trenches, equipment vaults, manholes, attics, and similar spaces.
g. Sweep concrete floors broom clean in unoccupied spaces.
h. Vacuum carpet and similar soft surfaces, removing debris and excess nap; shampoo if visible soil or stains remain.
i. Clean transparent materials, including mirrors and glass in doors and windows. Replace chipped or broken glass and other damaged transparent materials. Polish mirrors and glass, taking care not to scratch surfaces.
j. Remove labels that are not permanent.

k. Wipe surfaces of mechanical and electrical equipment, elevator equipment, and similar equipment. Remove excess lubrication, paint and mortar droppings, and other foreign substances.
l. Clean plumbing fixtures to a sanitary condition, free of stains, including stains resulting from water exposure.
m. Replace disposable air filters and clean permanent air filters. Clean exposed surfaces of diffusers, registers, and grills.
n. Clean ducts, blowers, and coils if units were operated without filters during construction.
o. Clean light fixtures, lamps, globes, and reflectors to function with full efficiency.
p. Leave Project clean and ready for occupancy.

C. Comply with safety standards for cleaning. Do not burn waste materials. Do not bury debris or excess materials on Owner's property. Do not discharge volatile, harmful, or dangerous materials into drainage systems. Remove waste materials from Project site and dispose of lawfully.
D. Construction Waste Disposal: Comply with waste disposal requirements in Division 01 Section "Construction Waste Management and Disposal."

3.2 REPAIR OF THE WORK

A. Complete repair and restoration operations before requesting inspection for determination of Substantial Completion.
B. Repair or remove and replace defective construction. Repairing includes replacing defective parts, refinishing damaged surfaces, touching up with matching materials, and properly adjusting operating equipment. Where damaged or worn items cannot be repaired or restored, provide replacements. Remove and replace operating components that cannot be repaired. Restore damaged construction and permanent facilities used during construction to specified condition.

1. Remove and replace chipped, scratched, and broken glass, reflective surfaces, and other damaged transparent materials.
2. Touch up and otherwise repair and restore marred or exposed finishes and surfaces. Replace finishes and surfaces that already show evidence of repair or restoration.

a. Do not paint over "UL" and other required labels and identification, including mechanical and electrical nameplates. Remove paint applied to required labels and identification.

3. Replace parts subject to operating conditions during construction that may impede operation or reduce longevity.
4. Replace burned-out bulbs, bulbs noticeably dimmed by hours of use, and defective and noisy starters in fluorescent and mercury vapor fixtures to comply with requirements for new fixtures.

PART 4 - CONTRACTOR CERTIFICATION FORMS

CONTRACTOR'S CERTIFICATION OF SUBSTANTIAL COMPLETION

BEFORE ME, the undersigned authority, on this day personally appeared _____, known to me to be a credible person and officer of _____, (hereunder called Contractor) and who, being duly sworn, upon his oath declares and acknowledges as follows:

1. I am the duly authorized agent for the said Contractor which has authorized me to make this affidavit, to enter into the agreements and to certify the status of completion claims herein set forth, on its behalf and as its acts and deeds, and all of the facts and recitations herein are true and correct.

2. Pursuant to an agreement dated _____ between _____ and THE UNIVERSITY OF LOUISIANA AT LAFAYETTE, (the Owner). The Contractor has supplied materials and performed labor in connection with the construction of improvements upon certain real property, located on BOUCHER STREET ON THE CAMPUS OF THE UNIVERSITY OF LOUISIANA - LAFAYETTE IN LAFAYETTE, LOUISIANA in LAFAYETTE Parish.

Said improvements are more particularly described as UNIVERSITY OF LOUISIANA AT LAFAYETTE – HEBRARD BOULEVARD RENOVATIONS (the "Improvements").

3. The Contractor has indicated that the Project has reached the stage of SUBSTANTIAL COMPLETION, as more fully described in the General Conditions of the Contract. The Contractor further certifies that by the execution of this Affidavit, he hereby requests the Architect to review the attached list of items to be Completed and/or Corrected and to compare the attached list to actual conditions present at the Project site.

4. The Contractor does further warrant that by claiming the Project has reached the stage of Substantial Completion that the review by the Architect is only to verify the status of the attached list of items to be Completed or Corrected and to determine whether a Certificate of Substantial Completion can be issued.

5. The Contractor does further understand that in the event the Architect's review of the Project conditions present does not substantiate the claims made by the Contractor, the Architect will prepare a separate List of Items to be Completed or Corrected and this list will be distributed to the Contractor. The results of this list will form the basis for issuance of the Certificate for Substantial Completion.

6. The Contractor fully understands and acknowledges that by submission of this Affidavit he is not indicating that the Project is suitable for Final Acceptance.

7. The Contractor also acknowledges that if the Architect is required to return to the Project site to verify the status of claims for Substantial Completion, the Architect shall be compensated for Additional Services in accordance with the requirements as enumerated in the Project Specifications, Section 01 77 00.

8. Attached hereto is a _____ page List of Items to be Completed or Corrected, dated _____, 20___, which is attached hereto and made a part hereof, and represents the Contractors claim that these are the remaining items to be completed and does not restrict the issuance of the Certificate of Substantial Completion or limit the List of Items to be Completed or Corrected to be prepared by the Architect and/or his Consultants.

EXECUTED THIS _____ DAY OF _____ OF 20___.

BY:_____

SUBSCRIBED AND SWORN TO BEFORE ME BY THE SAID

_____

this _____day of _____, 20___

to certify which witness my hand and seal of office.

_____
NOTARY PUBLIC IN AND FOR

_____

CONTRACTOR'S CERTIFICATION OF COMPLETION FOR FINAL ACCEPTANCE

BEFORE ME, the undersigned authority, on this day personally appeared _____, known to me to be a credible person and officer of _____, (hereunder called Contractor) and who, being duly sworn, upon his oath declares and acknowledges as follows:

1. I am the duly authorized agent for the said Contractor which has authorized me to make this affidavit, to enter into the agreements and to certify the status of completion claims herein set forth, on its behalf and as its acts and deeds, and all of the facts and recitations herein are true and correct.

2. Pursuant to an agreement dated _____ between _____ and THE UNIVERSITY OF LOUISIANA AT LAFAYETTE, (the Owner). The Contractor has supplied materials and performed labor in connection with the construction of improvements upon certain real property, located on BOUCHER STREET ON THE CAMPUS OF THE UNIVERSITY OF LOUISIANA - LAFAYETTE IN LAFAYETTE, LOUISIANA in LAFAYETTE Parish.

Said improvements are more particularly described as UNIVERSITY OF LOUISIANA AT LAFAYETTE – HEBRARD BOULEVARD RENOVATIONS (the "Improvements").

3. The contractor has indicated that the Project has reached the stage of FINAL COMPLETION, as more fully described in the General Conditions of the Contract. The Contractor further certifies that by the execution of this Affidavit, he has completely addressed all items identified as the List of Items to Be Completed or Corrected that was previously attached to the Certificate of Substantial Completion dated _____, 20___. The Contractor fully understands and acknowledges that by submission of this Affidavit he is indicating that the Project is suitable for Final Acceptance.

4. The Contractor does further warrant that by claiming the Project has reached the stage of Final Completion that the review by the Architect is only to verify the status of such claim and to determine whether a Certificate of FINAL COMPLETION can be issued.

5. The Contractor does further understand that in the event the Architect's review of the Project conditions present does not substantiate the claims made by the Contractor, the Architect will prepare a separate List of Items to be Completed or Corrected and this list will be distributed to the Contractor. The results of this list will form the basis for issuance of the Certificate for Final Completion.

6. The Contractor also acknowledges that the Architect is limited to one additional reinspection. If the Architect is required to return to the Project site to verify the status of claims for Substantial Completion, the Architect shall be compensated for Additional Services in accordance with the requirements as enumerated in the Project Specifications, Section 01 77 00.

EXECUTED THIS _____ DAY OF _____ OF 20___.

BY:_____

SUBSCRIBED AND SWORN TO BEFORE ME BY THE SAID

_____

this _____day of _____, 20___

to certify which witness my hand and seal of office.

_____
NOTARY PUBLIC IN AND FOR

_____

END OF SECTION 01 77 00

Section 01 78 23 - Operation and Maintenance Data

PART ONE - GENERAL

1.1 RELATED DOCUMENTS

A. Drawings and general provisions of the Contract, including General and Supplementary Conditions and other Division 01 Specification Sections, apply to this Section.

1.2 SUMMARY

A. This Section includes administrative and procedural requirements for preparing operation and maintenance manuals, including the following:

1. Operation and maintenance documentation directory.
2. Operation manuals for systems, subsystems, and equipment.
3. Maintenance manuals for the care and maintenance of products, materials, finishes, systems and equipment.

B. Related Sections include the following:

1. Division 01 Section "Closeout Procedures" for submitting operation and maintenance manuals.
2. Division 01 Section “General Commissioning Requirements” for verification and compilation of data into operation and maintenance manuals.
3. Divisions 02 through 49 Sections for specific operation and maintenance manual requirements for the Work in those Sections.

1.3 SUBMITTALS

A. Manual Content: Operations and Maintenance Manual content is specified in individual Specification sections to be reviewed at the time of Section Submittals. Submit reviewed manual content formatted and organized as required by this Section.

1. Architect and Commissioning Authority will comment on whether content of operations and maintenance submittals are acceptable.
2. Where applicable, clarify and update reviewed manual content to correspond to revisions and field conditions.

B. Initial Submittal: Submit 2 draft copies of each manual at least 15 days before requesting inspection for Substantial Completion. Include a complete operation and maintenance directory. Architect will return one copy of draft and mark whether general scope and content of manual are acceptable.

C. Final Submittal: Submit one copy of each manual in final form at least 15 days before final inspection. Architect will return copy with comments within 15 days after final inspection.

1. Correct or modify each manual to comply with Architect's comments.

D. Format: Upon acceptance of final submittals by Architect, submit operations and maintenance manuals in the following format:

1. PDF electronic file. Assemble each manual into a composite electronically indexed file. Submit on digital media acceptable to Architect.
2. Two paper copies. Include a complete operations and maintenance directory. Enclose title pages and directories in clear plastic sleeves.

1.4 COORDINATION

A. General: Where operation and maintenance documentation includes information on installations by more than one factory-authorized service representative, assemble and coordinate information furnished by representatives and prepare manuals.

PART 2 - PRODUCTS

2.1 OPERATION AND MAINTENANCE DOCUMENTATION DIRECTORY

A. Organization: Include a section in the directory for each of the following:

1. List of documents.
2. List of systems.
3. List of equipment.
4. Table of contents.

B. List of Equipment: List equipment for each system, organized alphabetically by system. For pieces of equipment not part of system, list alphabetically in separate list.

C. Tables of Contents: Include a table of contents for each emergency, operation, and maintenance manual.

2.2 REQUIREMENTS FOR MANUALS, GENERAL

A. Organization: Unless otherwise indicated, organize each manual into a separate section for each system and subsystem, and a separate section for each piece of equipment not part of a system. Each manual shall contain the following materials, in the order listed:

1. Title page.
2. Table of contents.
3. Manual contents.

B. Title Page: Enclose title page in transparent plastic sleeve. Include the following information:

1. Subject matter included in manual.
2. Name and address of Project.
3. Name and address of Owner.
4. Date of submittal.
5. Name, address, and telephone number of Contractor.
6. Name and address of Architect.
7. Cross-reference to related systems in other operation and maintenance manuals.

C. Table of Contents: List each product included in manual, identified by product name, indexed to the content of the volume, and cross-referenced to Specification Section number in Project Manual.

1. If operation or maintenance documentation requires more than one volume to accommodate data, include comprehensive table of contents for all volumes in each volume of the set.

D. Manual Contents: Organize into sets of manageable size. Arrange contents alphabetically by system, subsystem, and equipment. If possible, assemble instructions for subsystems, equipment, and components of one system into a single binder.

1. Binders: Heavy-duty, 3-ring, vinyl-covered, loose-leaf binders, in thickness necessary to accommodate contents, sized to hold 8-1/2-by-11-inch paper; with clear plastic sleeve on spine to hold label describing contents and with pockets inside covers to hold folded oversize sheets.

   a. If two or more binders are necessary to accommodate data of a system, organize data in each binder into groupings by subsystem and related components. Cross-reference other binders if necessary to provide essential information for proper operation or maintenance of equipment or system.
   b. Identify each binder on front and spine, with printed title "OPERATION AND MAINTENANCE MANUAL," Project title or name, and subject matter of contents. Indicate volume number for multiple-volume sets.

2. Dividers: Heavy-paper dividers with plastic-covered tabs for each section. Mark each tab to indicate contents. Include typed list of products and major components of equipment included in the section on each divider, cross-referenced to Specification Section number and title of Project Manual.
3. Protective Plastic Sleeves: Transparent plastic sleeves designed to enclose diagnostic software diskettes for computerized electronic equipment.
4. Supplementary Text: Prepared on 8-1/2-by-11-inch white bond paper.
5. Drawings: Attach reinforced, punched binder tabs on drawings and bind with text.

   a. If oversize drawings are necessary, fold drawings to same size as text pages and use as foldouts.
   b. If drawings are too large to be used as foldouts, fold and place drawings in labeled envelopes and bind envelopes in rear of manual. At appropriate locations in manual, insert typewritten pages indicating drawing titles, descriptions of contents, and drawing locations.

2.3 OPERATION MANUALS

A. Content: In addition to requirements in this Section, include operation data required in individual Specification Sections and the following information:

1. System, subsystem, and equipment descriptions.
2. Performance and design criteria if Contractor is delegated design responsibility.
3. Operating standards.
4. Operating procedures.
5. Operating logs.
6. Wiring diagrams.
7. Control diagrams.
8. Piped system diagrams.
9. Precautions against improper use.
10. License requirements including inspection and renewal dates.

B. Descriptions: Include the following:

1. Product name and model number.
2. Manufacturer's name.
3. Equipment identification with serial number of each component.
4. Equipment function.
5. Operating characteristics.
6. Limiting conditions.
7. Performance curves.
8. Engineering data and tests.
9. Complete nomenclature and number of replacement parts.

C. Operating Procedures: Include the following, as applicable:

1. Startup procedures.
2. Equipment or system break-in procedures.
3. Routine and normal operating instructions.
4. Regulation and control procedures.
5. Instructions on stopping.
6. Normal shutdown instructions.
7. Seasonal and weekend operating instructions.
8. Required sequences for electric or electronic systems.
9. Special operating instructions and procedures.

D. Systems and Equipment Controls: Describe the sequence of operation, and diagram controls as installed.

E. Piped Systems: Diagram piping as installed, and identify color-coding where required for identification.

2.4 PRODUCT MAINTENANCE MANUAL

A. Content: Organize manual into a separate section for each product, material, and finish. Include source information, product information, maintenance procedures, repair materials and sources, and warranties and bonds, as described below.

B. Source Information: List each product included in manual, identified by product name and arranged to match manual's table of contents. For each product, list name, address, and telephone number of Installer or supplier and maintenance service agent, and cross-reference Specification Section number and title in Project Manual.

C. Product Information: Include the following, as applicable:

1. Product name and model number.
2. Manufacturer's name.
3. Color, pattern, and texture.
4. Material and chemical composition.
5. Reordering information for specially manufactured products.

D. Maintenance Procedures: Include manufacturer's written recommendations and the following:

1. Inspection procedures.
2. Types of cleaning agents to be used and methods of cleaning.
3. List of cleaning agents and methods of cleaning detrimental to product.
4. Schedule for routine cleaning and maintenance.
5. Repair instructions.

E. Repair Materials and Sources: Include lists of materials and local sources of materials and related services.

F. Warranties and Bonds: Include copies of warranties and bonds and lists of circumstances and conditions that would affect validity of warranties or bonds.

1. Include procedures to follow and required notifications for warranty claims.

PART 3 - EXECUTION

3.1 MANUAL PREPARATION

A. Operation and Maintenance Documentation Directory: Prepare a separate manual that provides an organized reference to emergency, operation, and maintenance manuals.

B. Product Maintenance Manual: Assemble a complete set of maintenance data indicating care and maintenance of each product, material, and finish incorporated into the Work.

C. Operation and Maintenance Manuals: Assemble a complete set of operation and maintenance data indicating operation and maintenance of each system, subsystem, and piece of equipment not part of a system.

1. Engage a factory-authorized service representative to assemble and prepare information for each system, subsystem, and piece of equipment not part of a system.
2. Prepare a separate manual for each system and subsystem, in the form of an instructional manual for use by Owner's operating personnel.

D. Manufacturers' Data: Where manuals contain manufacturers' standard printed data, include only sheets pertinent to product or component installed. Mark each sheet to identify each product or component incorporated into the Work. If data include more than one item in a tabular format, identify each item using appropriate references from the Contract Documents. Identify data applicable to the Work and delete references to information not applicable.

1. Prepare supplementary text if manufacturers' standard printed data are not available and where the information is necessary for proper operation and maintenance of equipment or systems.

E. Drawings: Prepare drawings supplementing manufacturers' printed data to illustrate the relationship of component parts of equipment and systems and to illustrate control sequence and flow diagrams. Coordinate these drawings with information contained in Record Drawings to ensure correct illustration of completed installation.

1. Do not use original Project Record Documents as part of operation and maintenance manuals.
2. Comply with requirements of newly prepared Record Drawings in Division 1 Section "Project Record Documents."

F. Comply with Division 01 Section "Closeout Procedures" for schedule for submitting operation and maintenance documentation.

END OF SECTION 01 78 23

Section 01 78 39 - Project Record Documents

PART 1 - GENERAL

1 .1 RELATED DOCUMENTS

A. Drawings and general provisions of the Contract, including General and Supplementary Conditions and Division 01 Specification Sections, apply to this Section.

1 .2 SUMMARY

A. This Section includes administrative and procedural requirements for Project Record Documents, including the following:

1. Record Drawings.
2. Record Specifications.
3. Record Product Data.

B. Related Sections include the following:

1. Division 01 Section "Closeout Procedures" for general closeout procedures.
2. Divisions 02 through 49 Sections for specific requirements for Project Record Documents of the Work in those Sections.

1 .3 SUBMITTALS

A. Record Drawings: Comply with the following:

1. Number of Copies: Submit one set of marked-up Record Prints.

B. Record Specifications: Submit one copy of Project's Specifications, including addenda and contract modifications.

C. Record Product Data: Submit one copy of each Product Data submittal.

1. Where Record Product Data is required as part of operation and maintenance manuals, submit marked-up Product Data as an insert in manual instead of submittal as Record Product Data.

PART 2 - PRODUCTS

2.1 RECORD DRAWINGS

A. Record Prints: Maintain one set of blue- or black-line white prints of the Contract Drawings and Shop Drawings.

1. Preparation: Mark Record Prints to show the actual installation where installation varies from that shown originally. Require individual or entity who obtained record data, whether individual or entity is Installer, subcontractor, or similar entity, to prepare the marked-up Record Prints.
2. Mark the Contract Drawings or Shop Drawings, whichever is most capable of showing actual physical conditions, completely and accurately. If Shop Drawings are marked, show cross-reference on the Contract Drawings.
3. Note Construction Change Directive numbers, alternate numbers, Change Order numbers, and similar identification, where applicable.

B. Record Documents: Immediately before inspection for Certificate of Substantial Completion, review marked-up Record Prints with Architect. When authorized, prepare a full set of corrected documents of the Contract Drawings and Shop Drawings.

2.2 RECORD SPECIFICATIONS

A. Preparation: Mark Specifications to indicate the actual product installation where installation varies from that indicated in Specifications, addenda, and contract modifications.

2.3 RECORD PRODUCT DATA

A. Preparation: Mark Product Data to indicate the actual product installation where installation varies substantially from that indicated in Product Data submittal.

PART 3 - EXECUTION

3.1 RECORDING AND MAINTENANCE

A. Recording: Maintain one copy of each submittal during the construction period for Project Record Document purposes. Post changes and modifications to Project Record Documents as they occur; do not wait until the end of Project.

B. Maintenance of Record Documents and Samples: Store Record Documents and Samples in the field office apart from the Contract Documents used for construction. Do not use Project Record Documents for construction purposes. Maintain Record Documents in good order and in a clean, dry, legible condition, protected from deterioration and loss. Provide access to Project Record Documents for Architect's reference during normal working hours.

END OF SECTION 01 78 39

Section 02 41 00 - Selective Structure Demolition

PART 1 - GENERAL

1.1 RELATED DOCUMENTS

A. Drawings and general provisions of the Contract, including General and Supplementary Conditions and other Division 01 Specification Sections, apply to this Section.

1.2 SUMMARY

A. Section Includes:

1. Demolition and removal of selected site elements and landscaping components.
2. Disconnecting, capping or sealing, abandoning in place, and/or removing utilities.

B. Related Requirements:

1. Division 01 Section "Summary" for restrictions on the use of the premises and Owner-occupancy requirements.
2. Division 01 Sections "Cutting and Patching" and “Execution" for cutting and patching procedures.
3. Division 01 Section “Photographic Documentation” for pre-construction photos taken before selective structure demolition operations commence.
4. Division 31 Section “Site Clearing” for site clearing and removal of landscaping elements as well as above- and below-grade improvements.

C. Related Keynote References: In addition to the numerical keynotes on the Drawings which reference this specific Project Manual Section 02 41 00, this Specification Section shall also be applicable to and contain General, Products, and Execution requirements for the following additional keynote groups indicated on the Drawings.

1. Keynotes indicated as 02 81 00 references.

1.3 DEFINITIONS

A. Remove: Detach items from existing construction and legally dispose of them off-site unless indicated to be removed and salvaged or removed and reinstalled.
B. Remove and Salvage: Carefully detach from existing construction, in a manner to prevent damage, and deliver to Owner ready for reuse.
C. Remove and Reinstall: Detach items from existing construction, prepare for reuse, and reinstall where indicated.
D. Existing to Remain: Existing items of construction that are not to be permanently removed and that are not otherwise indicated to be removed, removed and salvaged, or removed and reinstalled.

1.4 MATERIALS OWNERSHIP

A. It is the intent of the Owner to remove all materials of salvageable value prior to commencement of work operations.
B. Unless otherwise indicated, any waste as a result of demolition operations shall become property of Contractor and shall be removed from the site.
C. Historic items, relics, antiques, and similar objects including, but not limited to, cornerstones and their contents, commemorative plaques and tablets, and other items of interest or value to Owner that may be uncovered during demolition remain the property of Owner.

1. Carefully salvage in a manner to prevent damage and promptly return to Owner.

1.5 PRE-DEMOLITION MEETINGS

A. Pre-demolition Conference: Conduct conference at Project site.

1. Inspect and discuss condition of construction to be selectively demolished.
2. Review structural load limitations of existing structure.
3. Review and finalize selective demolition schedule and verify availability of materials, demolition personnel, equipment, and facilities needed to make progress and avoid delays.
4. Review requirements of work performed by other trades that rely on substrates exposed by selective demolition operations.
5. Review areas where existing construction is to remain and requires protection.

1.6 SUBMITTALS

A. Qualification Data: For refrigerant recovery technician.
B. Proposed Protection Measures: Submit report, including drawings as necessary, that indicate the measures proposed for protecting individuals and property, for dust control and for noise control. Indicate proposed locations and construction of barriers.
C. Schedule of Selective Demolition Activities: Indicate the following:

1. Detailed sequence of selective demolition and removal work, with starting and ending dates for each activity. Ensure Owner's on-site operations are uninterrupted.
2. Interruption of Utility Services. Indicate how long utility services will be interrupted as well as if it will be necessary to interrupt utility services to any adjacent areas or buildings.

a. Coordination for shutoff, capping, and continuation of utility services.

D. Inventory: Submit a list of items to be removed and salvaged and deliver to Owner prior to start of demolition.
E. Predemolition Photographs or Video: Submit before Work begins.

1.7 CLOSEOUT SUBMITTALS

A. Record Drawings: Identifying and accurately showing locations of capped utilities and other subsurface structural, electrical and mechanical conditions.

1.8 QUALITY ASSURANCE AND PERFORMANCE REQUIREMENTS

A. Regulatory Requirements: Comply with governing EPA notification regulations before beginning selective demolition operations. Comply with hauling and disposal regulations of authorities having jurisdiction.
B. Standards: Comply with ANSI/ASSE A10.6 and NFPA 241.

1.9 PROJECT CONDITIONS

A. Owner will occupy portions of the building immediately adjacent to selective demolition areas. Conduct selective demolition so Owner’ operations will not be disrupted.
B. Conditions existing at time of inspection for bidding purpose will be maintained by Owner as far as practical.
C. Notify Architect of discrepancies between existing conditions and Drawings before proceeding with selective demolition.

D. Hazardous Materials: It is not expected that hazardous materials will be encountered in the Work.

1. If suspected hazardous materials are encountered, do not disturb; immediately notify Architect and Owner. Hazardous materials will be removed by Owner under a separate contract.

E. Storage or sale of removed items or materials on-site is not permitted.
F. Utility Service: Maintain existing utilities indicated to remain in service and protect them against damage during selective demolition operations.
G. Maintain fire-protection facilities in service during selective demolition operations.

PART 2 - PRODUCTS (Not Used)

PART 3 - EXECUTION

3.1 EXAMINATION

A. Verify that utilities have been disconnected and capped before starting selective demolition operations.
B. Contractor may review record documents of existing construction provided by Owner. Owner does not guarantee that existing conditions are same as those indicated in record documents.
C. Survey existing conditions and correlate with requirements indicated to determine extent of selective demolition required.

1. When unanticipated mechanical, electrical, or structural elements that conflict with intended function or design are encountered, investigate and measure the nature and extent of conflict. Promptly submit a written report to Architect.
2. Inventory and record the condition of items to be removed and salvaged. Provide photographs or video of conditions that might be misconstrued as damage caused by salvage operations.
3. Before selective demolition or removal of existing building elements that will be reproduced or duplicated in final Work, make permanent record of measurements, materials, and construction details required to make exact reproduction.

3.2 UTILITY SERVICES AND MECHANICAL/ELECTRICAL SYSTEMS

A. Existing Services/Systems to Remain: Maintain services/systems indicated to remain and protect them against damage.

1. Comply with requirements for existing services/systems interruptions specified in Division 01 Section "Summary."

B. Existing Services/Systems to Be Removed, Relocated, or Abandoned: Locate, identify, disconnect, and seal or cap off indicated utility services and mechanical/electrical systems serving areas to be selectively demolished.

1. Arrange to shut off indicated utilities with utility companies and Owner.
2. If services/systems are required to be removed, relocated, or abandoned, provide temporary services/systems that bypass area of selective demolition and that maintain continuity of services/systems to other buildings serviced by any components of this building.

C. Disconnect, demolish, and remove plumbing lines and other components indicated to be removed.

1. Piping to Be Removed: Remove portion of piping indicated to be removed and cap or plug remaining piping with same or compatible piping material.
2. Piping to Be Abandoned in Place: Drain piping and cap or plug piping with same or compatible piping material.
3. Equipment to Be Removed: Disconnect and cap services and remove equipment.
4. Equipment to Be Removed and Salvaged: Disconnect and cap services and remove equipment and deliver to Owner.

D. Cut off pipe or conduit a minimum of 24 inches below grade. Cap, valve, or plug and seal remaining portion of pipe or conduit after bypassing according to requirements of authorities having jurisdiction.

3.3 PREPARATION

A. Site Access and Temporary Controls: Conduct selective demolition and debris-removal operations to ensure minimum interference with roads, streets, walks, walkways, and other adjacent occupied and used facilities.

1. Comply with requirements for access and protection specified in Division 01 Section "Temporary Facilities and Controls."

B. Temporary Facilities: Provide temporary barricades and other protection required to prevent injury to people and damage to adjacent buildings and facilities to remain.

1. Provide protection to ensure safe passage of people around selective demolition area.

C. Temporary Shoring: Provide and maintain shoring, bracing, and structural supports as required to preserve stability and prevent movement, settlement, or collapse of construction and finishes to remain, and to prevent unexpected or uncontrolled movement or collapse of construction being demolished.

1. Strengthen or add new supports when required during progress of selective demolition.

D. Temporary Protection:

1. Protect adjacent buildings and facilities from damage due to demolition activities and operations.
2. Protect existing site improvements, appurtenances, and landscaping to remain.
3. Provide temporary barricades to ensure safe passage of people around building demolition area and to and from adjacent buildings. It is not intended that student and pedestrian traffic will traverse project site or areas within construction boundaries established by perimeter fencing.

E. Remove temporary barriers and protections where hazards no longer exist. Where open excavations or other hazardous conditions remain, leave temporary barriers and protections in place.

3.4 SELECTIVE DEMOLITION, GENERAL

A. General: Demolish and remove existing construction only to the extent required by new construction and as indicated. Use methods required to complete the Work within limitations of governing regulations and as follows:

1. Neatly cut openings and holes plumb, square, and true to dimensions required. Use cutting methods least likely to damage construction to remain or adjoining construction. Use hand tools or small power tools designed for sawing or grinding, not hammering and chopping, to minimize disturbance of adjacent surfaces. Temporarily cover openings to remain.
2. Cut or drill from the exposed or finished side into concealed surfaces to avoid marring existing finished surfaces.
3. Remove decayed, vermin-infested, or otherwise dangerous or unsuitable materials and promptly dispose of off-site.
4. Locate selective demolition equipment and remove debris and materials so as not to impose excessive loads on supporting walls, floors, or framing.
5. Dispose of demolished items and materials promptly.

B. Site Access and Temporary Controls: Conduct building demolition and debris-removal operations to ensure minimum interference with roads, streets, walks, walkways, and other adjacent occupied and used facilities.

1. Do not close or obstruct streets, walks, walkways, or other adjacent occupied or used facilities without permission from Owner and authorities having jurisdiction. Provide alternate routes around closed or obstructed traffic ways if required by authorities having jurisdiction.
2. Use water mist and other suitable methods to limit spread of dust and dirt. Comply with governing environmental-protection regulations. Do not use water when it may damage adjacent construction or create hazardous or objectionable conditions, such as ice, flooding, and pollution.

C. Use of explosives is not permitted.

D. Existing Items to Remain: Protect construction indicated to remain against damage and soiling during selective demolition. When permitted by Architect, items may be removed to a suitable, protected storage location during selective demolition and cleaned and reinstalled in their original locations after selective demolition operations are complete.

3.5 SELECTIVE DEMOLITION PROCEDURES FOR SPECIFIC MATERIALS

A. Concrete: Demolish in small sections. Using power-driven saw, cut concrete to a depth of at least 3/4 inch at junctures with construction to remain. Dislodge concrete from reinforcement at perimeter of areas being demolished, cut reinforcement, and then remove remainder of concrete. Neatly trim openings to dimensions indicated.

3.6 DISPOSAL OF DEMOLISHED MATERIALS

A. General: Except for items or materials indicated to be reused, salvaged, reinstalled, or otherwise indicated to remain Owner's property, remove demolished materials from Project site and legally dispose of them in an EPA-approved landfill.

1. Do not allow demolished materials to accumulate on-site.
2. Remove and transport debris in a manner that will prevent spillage on adjacent surfaces and areas.
3. Remove debris from elevated portions of building by chute, hoist, or other device that will convey debris to grade level in a controlled descent.

B. Burning: Do not burn demolished materials.
C. Disposal: Transport demolished materials off Owner's property and legally dispose of them.

3.7 CLEANING

A. Clean adjacent structures and improvements of dust, dirt, and debris caused by selective demolition operations. Return adjacent areas to condition existing before selective demolition operations began.

END OF SECTION 02 41 00

Section 03 30 00 – Cast-In-Place Concrete

PART 1 - GENERAL

1.1 RELATED DOCUMENTS

A. Drawings and general provisions of the Contract, including General and Supplementary Conditions, apply to this Section.

1.2 SUMMARY

A. This Section specifies cast-in place concrete, including formwork, reinforcement, concrete materials, mixture design, placement procedures, and finishes, for the following:

1. Footings and foundations.

B. Related Sections include the following:

1. Division 32 Sections for civil work for rigid pavement and incidental concrete construction related to civil components.

1.3 DEFINITIONS

A. Cementitious Materials: Portland cement. None of the following are allowed in any concrete in this project: blended hydraulic cement, fly ash and other pozzolans, ground granulated blast-furnace slag, and silica fume; subject to compliance with requirements.

1.4 SUBMITTALS

A. Product Data: For each type of product indicated.
B. Design Mixtures: Submit a design mixture for each concrete mixture, proportioned on the basis of field experience or trial mixtures, or both, as required by ACI 318-08, chapter 5. Submit alternate design mixtures when characteristics of materials, Project conditions, weather, test results, or other circumstances warrant adjustments.
C. Field quality-control test and inspection reports.

1.5 QUALITY ASSURANCE

A. Manufacturer Qualifications: A firm experienced in manufacturing ready-mixed concrete products and that complies with ASTM C 94/C 94M requirements for production facilities and equipment.
B. Materials and installed work may require testing and retesting, as directed by Architect, at anytime during progress of work. Allow free access to material stockpiles and facilities. Tests, including retesting of rejected materials for installed work, shall be done at Contractor's expense.

PART 2 - PRODUCTS

2.1 CONCRETE MATERIALS

A. Cementitious Material: Use the following cementitious materials, of the same type, brand, and source, throughout Project:

1. Portland Cement: ASTM C 150, Type I/II unless otherwise acceptable to Architect.

B. Normal-Weight Aggregates: ASTM C 33, coarse aggregate or better, graded. Provide aggregates from a single source with documented service record data of satisfactory service in similar applications and service conditions using similar aggregates and cementitious materials.

1. Maximum Coarse-Aggregate Size: 1 inch nominal.
2. Fine Aggregate: Free of materials with deleterious reactivity to alkali in cement.

C. Lightweight Aggregate: ASTM C 330, 3/4-inch nominal maximum aggregate size.
D. Water: ASTM C 94/C 94M and potable.

2.2 ADMIXTURES

A. Air-Entraining Admixture: ASTM C 260 – Do not use in slabs scheduled to receive dry shake floor hardener.
B. Chemical Admixtures: Provide admixtures certified by manufacturer to be compatible with other admixtures and that will not contribute water-soluble chloride ions exceeding those permitted in hardened concrete. Do not use calcium chloride or admixtures containing calcium chloride.

1. Water-Reducing Admixture: ASTM C 494/C 494M, Type A.
2. Retarding Admixture: ASTM C 494/C 494M, Type B.
3. Water-Reducing and Retarding Admixture: ASTM C 494/C 494M, Type D.
4. High-Range, Water-Reducing Admixture: ASTM C 494/C 494M, Type F.
   High-Range, Water-Reducing and Retarding Admixture: ASTM C 494/C 494M, Type G.
5. Plasticizing and Retarding Admixture: ASTM C 1017/C 1017M, Type II.

2.3 CONCRETE MIXTURES, GENERAL

A. Prepare design mixtures for each type and strength of concrete, proportioned on the basis of laboratory trial mixture or field test data, or both, according to ACI 301.

1. Use a qualified independent testing agency for preparing and reporting proposed mixture designs based on laboratory trial mixtures.

B. Limit water-soluble, chloride-ion content in hardened concrete to 0.1 percent by weight of cement.
C. The design mixtures for all exterior concrete shall provide a minimum of 4.5 percent entrained air.

D. Admixtures: Use admixtures according to manufacturer's written instructions.

1. Use water-reducing, high-range water-reducing or plasticizing admixture in concrete, as required, for placement and workability.
2. Use water-reducing and retarding admixture when required by high temperatures, low humidity, or other adverse placement conditions.
3. Use water-reducing admixture in pumped concrete, concrete for heavy-use industrial slabs and parking structure slabs, concrete required to be watertight, and concrete with a water-cementitious materials ratio below 0.50.
4. Use corrosion-inhibiting admixture in concrete mixtures where indicated.
5. If more than one admixture is used in a concrete mix, assure that only compatible admixtures are used.

2.4 CONCRETE MIXTURES FOR POST AND PANEL SIGNS:

A. Footings and Foundations: Proportion normal-weight concrete mixture as follows:

1. Minimum Compressive Strength: 3500 psi at 28 days
2. Maximum Water-Cement Ratio: .50.
3. Slump Limit: 5 inches plus or minus 1 inch.

2.5 CONCRETE MIXING

A. Ready-Mixed Concrete: Measure, batch, mix, and deliver concrete according to ASTM C 94/C 94M, and furnish batch ticket information. The time concrete is unloaded shall be recorded on each batch ticket.

1. When air temperature is between 85 and 90 deg F, reduce mixing and delivery time from 1-1/2 hours to 75 minutes; when air temperature is above 90 deg F, reduce mixing and delivery time to 60 minutes.

PART 3 - EXECUTION

3.1 FORMWORK

A. Design, erect, shore, brace, and maintain formwork, according to ACI 301, to support vertical, lateral, static, and dynamic loads, and construction loads that might be applied, until structure can support such loads.
B. Construct formwork so concrete members and structures are of size, shape, alignment, elevation, and position indicated, within tolerance limits of ACI 117.
C. Construct forms tight enough to prevent loss of concrete mortar.
D. Fabricate forms for easy removal without hammering or prying against concrete surfaces. Provide crush or wrecking plates where stripping may damage cast concrete surfaces. Provide top forms for inclined surfaces steeper than 1.5 horizontal to 1 vertical.

1. Install keyways, reglets, recesses, and the like, for easy removal.
2. Do not use rust-stained steel form-facing material.

E. Set edge forms, bulkheads, and intermediate screed strips for slabs to achieve required elevations and slopes in finished concrete surfaces. Provide and secure units to support screed strips; use strike-off templates or compacting-type screeds.
F. Chamfer exterior corners and edges of permanently exposed concrete, unless otherwise indicated.

G. Retighten forms and bracing before placing concrete, as required, to prevent mortar leaks and maintain proper alignment.

H. Coat contact surfaces of forms with form-release agent, according to manufacturer's written instructions, before placing reinforcement.

3.2 CONCRETE PLACEMENT

A. Before placing concrete, verify that installation of formwork, reinforcement, and embedded items is complete and that required inspections have been performed.

1. All embedded items shall be set prior to placement of concrete.

B. Do not add water to concrete during delivery, at Project site, or during placement unless approved by Architect.

C. Do not add water to concrete after adding high-range water-reducing admixtures to mixture.

D. Deposit concrete continuously in one layer or in horizontal layers of such thickness that no new concrete will be placed on concrete that has hardened enough to cause seams or planes of weakness. If a section cannot be placed continuously, provide construction joints as indicated. Deposit concrete to avoid segregation.

1. Deposit concrete in horizontal layers of depth to not exceed formwork design pressures and in a manner to avoid inclined construction joints.
2. Consolidate placed concrete with mechanical vibrating equipment according to ACI 301.
3. Do not use vibrators to transport concrete inside forms. Insert and withdraw vibrators vertically at uniformly spaced locations to rapidly penetrate placed layer and at least 6 inches into preceding layer. Do not insert vibrators into lower layers of concrete that have begun to lose plasticity. At each insertion, limit duration of vibration to time necessary to consolidate concrete and complete embedment of reinforcement and other embedded items without causing mixture constituents to segregate.

E. Cold-Weather Placement: Comply with ACI 306.1 and as follows. Protect concrete work from physical damage or reduced strength that could be caused by frost, freezing actions, or low temperatures.

1. When average high and low temperature is expected to fall below 40 deg F for three successive days, maintain delivered concrete mixture temperature within the temperature range required by ACI 301.
2. Do not place concrete when temperature is 36 deg F or below or if temperature is expected to reach 36 deg F (or below) within 12 hours of the anticipated time for completing a concrete pour.
3. Do not use frozen materials or materials containing ice or snow. Do not place concrete on frozen subgrade or on subgrade containing frozen materials.
4. Do not use calcium chloride, salt, or other materials containing antifreeze agents or chemical accelerators unless otherwise specified and approved in mixture designs.

F. Hot-Weather Placement: Comply with ACI 301 and as follows:

1. Maintain concrete temperature below 90 deg F at time of placement. Chilled mixing water or chopped ice may be used to control temperature, provided water equivalent of ice is calculated to total amount of mixing water. Using liquid nitrogen to cool concrete is Contractor's option.
2. Fog-spray forms, steel reinforcement, and subgrade just before placing concrete. Keep subgrade uniformly moist without standing water, soft spots, or dry areas.

3.3 FINISHING FORMED SURFACES

A. Rubbed Finish: Consult with Project Architect to determine the type of rubbed finish prior to pouring of concrete. Apply the following to smooth-formed finished as-cast concrete where indicated:

1. Smooth-Rubbed Finish: Not later than one day after form removal, moisten concrete surfaces and rub with carborundum brick or another abrasive until producing a uniform color and texture. Do not apply cement grout other than that created by the rubbing process.

B. Related Unformed Surfaces: At tops of walls, horizontal offsets, and similar unformed surfaces adjacent to formed surfaces, strike off smooth and finish with a texture matching adjacent formed surfaces. Continue final surface treatment of formed surfaces uniformly across adjacent unformed surfaces, unless otherwise indicated.

3.4 CONCRETE PROTECTING AND CURING

A. General: Protect freshly placed concrete from premature drying and excessive cold or hot temperatures. Comply with ACI 306.1 for cold-weather protection and ACI 301 for hot-weather protection during curing.

3.5 CONCRETE SURFACE REPAIRS

A. Defective Concrete: Repair and patch defective areas when approved by Architect. Remove and replace concrete that cannot be repaired and patched to Architect's approval.

B. Patching Mortar: Mix dry-pack patching mortar, consisting of one part portland cement to two and one-half parts fine aggregate passing a No. 16 sieve, using only enough water for handling and placing.

END OF SECTION 03 30 00

Section 05 50 00 – Metal Fabrications

PART 1 - GENERAL

1.1 RELATED DOCUMENTS

A. Drawings and general provisions of the Contract, including General and Supplementary Conditions and other Division 01 Specification Sections, apply to this Section.

1.2 SUMMARY

A. This Section includes the following metal fabrications:

1. Retractable bollard sets and sleeves.
2. Miscellaneous metal accessories.

B. Products furnished, but not installed, under this Section:

1. Anchor bolts, steel pipe sleeves, slotted-channel inserts, and wedge-type inserts indicated to be cast into concrete.
2. Weld plates and angles for casting into concrete for applications where they are not specified in other Sections.

C. Related Requirements: Division 03 Sections for concrete foundations for retractable bollards.

1.3 PERFORMANCE REQUIREMENTS

A. Thermal Movements: Allow for thermal movements from ambient and surface temperature changes acting on exterior metal fabrications by preventing buckling, opening of joints, overstressing of components, failure of connections, and other detrimental effects.

1. Temperature Change: 120 deg F, ambient; 180 deg F, material surfaces.

1.4 SUBMITTALS

A. Shop drawings detailing fabrication and erection of each metal fabrication indicated. Include plans, elevations, sections, and details of metal fabrications and their connections. Show anchorage and accessory items. Provide templates for anchors and bolts specified for installation under other Sections.
B. Samples representative of materials and finished products as may be requested by Architect.
C. Welder certificates signed by Contractor certifying that welders comply with requirements specified under the "Quality Assurance" Article.
D. Qualification data for firms and persons specified in the "Quality Assurance" Article to demonstrate their capabilities and experience. Include a list of completed projects with project name, addresses, names of architects and owners, and other information specified.
E. Samples: Submit manufacturer’s standard finishes for final selection.
F. Setting Drawings: Show embedded items and cutouts required for work specified in other Sections.
G. Maintenance Data: Submit manufacturer’s field touch-up., cleaning, and maintenance instructions.
H. Warranty Documentation: Submit sample of manufacturer’s warranty.

1.5 QUALITY ASSURANCE

A. Fabricator Qualifications: Five years successful experience producing metal fabrications similar to those indicated for this Project with a record of successful in-service performance, and with sufficient production capacity to produce required units without delaying the Work.

B. Welding Standards: Qualify procedures and personnel according to the following:

1. AWS D1.1 "Structural Welding Code--Steel,"
2. AWS D1.2 "Structural Welding Code—Aluminum."
3. AWS D1.6 "Structural Welding Code—Stainless Steel."
4. Certify that each welder has satisfactorily passed AWS qualification tests for welding processes involved and, if pertinent, has undergone recertification.

1.6 COORDINATION

A. Coordinate installation of sleeves, anchorages, and weld plates and angles for casting into concrete.

B. Furnish setting drawings, templates, and directions for installing anchorages, including sleeves, concrete inserts, anchor bolts and items with integral anchors that are to be embedded into concrete.

C. Deliver such items to Project site in time for installation.

D. Protect bollards and accessories during delivery, storage, and handling.

1.7 PROJECT CONDITIONS

A. Field Measurements: Check actual locations of construction to which metal fabrications must fit by accurate field measurements before fabrication. Show recorded measurements on final shop drawings. Coordinate fabrication schedule with construction progress to avoid delaying the Work.

1. Where field measurements cannot be made without delaying the Work, guarantee dimensions and proceed with fabricating products without field measurements. Coordinate construction to ensure that actual dimensions correspond to guaranteed dimensions. Allow for trimming and fitting.

PART 2 - PRODUCTS

2.1 METALS

A. Metal Surfaces: For metal fabrications exposed to view in the completed Work, provide materials selected for their surface flatness, smoothness, and freedom from surface blemishes. Do not use materials with exposed pitting, seam marks, roller marks, rolled trade names, or roughness.

B. Steel Plates, Shapes, and Bars: ASTM A36/A36M.

C. Stainless Steel Sheet, Strip, and Plate: ASTM A 2540 or ASTM A666, Type 304.

D. Stainless Steel Bars and Shapes: ASTM A276, Type 304.

E. Rolled Stainless Steel Floor Plate: ASTM A793.

2.2 FASTENERS

A. Select fasteners for the type, grade, and class required.

B. General: Unless otherwise indicated, provide Type 304 stainless-steel fasteners for exterior use.

1. Provide stainless-steel fasteners for fastening aluminum and stainless steel.

C. Stainless Steel Bolts and Nuts: Regular hexagon-head annealed stainless-steel bolts, ASTM F593; with hex nuts, ASTM F594; and, where indicated, flat washers; Alloy Group 1 (A1).

D. Anchors, General: Anchors with capability to sustain, without failure, a load equal to 4 times the load imposed when installed in conditions indicated on Drawings.

1. Post-Installed Anchors: Torque controlled expansion anchors or chemical anchors.

a. Material: Alloy Group 1 stainless steel bolts, ASTM F593, and nuts, ASTM F594.

2.3 RETRACTABLE BOLLARD SET

A. Basis of Design: The retractable bollard set specified is intended to establish the design intent and required standard of quality. It is not intended to preclude the use of other acceptable manufacturers.

1. Products specified are due to unique visual or performance requirements as determined by the Architect and the Owner. Due to this and/or other reasons best known to the Architect, there may be proposed alternatives that the Architect will not approve. In these matters, the decision of the Architect will be final.

B. Retractable Bollard Set Manufacturer: Reliance Foundry Company, Ltd., 6450 148th Street, Unit 27, Surrey, BC, Canada V3S 7G7, 1-877-789-3245.; info@reliance-foundry.com.

1. Material: Stainless Steel:

a. Pipe: ASTM A312, Grade TP 316.
b. Plate: ASTM A959, Grade TP 316.

2. Bollard:

a. Model: Reliance Foundry: R-8471
b. Height: 35-1/2 inches.
c. Diameter: 4-1/2 inches.
d. Weight: 25 pounds.
e. Design: Retractable cylinder with flat top.
f. Lock: Receiver with key.
g. Finish: Stainless Steel – Brushed
h. Reflective Stripe: Red:

3. Installation Type:

a. Cast in sleeve in concrete
b. Locking: In raised position
c. Footing: 4000 psi minimum concrete or mortar

2.4 MISCELLANEOUS MATERIALS

A. Bituminous Paint: Cold-Applied asphalt emulsion complying with ASTM D1187.
B. Nonshrink, Nonmetallic Grout: Factory-packaged, nonstaining, noncorrosive, nongaseous grout complying with ASTM C 1107. Provide grout specifically recommended by manufacturer for interior and exterior applications.

1. Subject to compliance with requirements, provide one of the following:

a. Euco N-S Grout; Euclid Chemical Co.
b. Masterflow 928 and 713; Master Builders Technologies, Inc.
c. Sealtight 588 Grout; W. R. Meadows, Inc.

C. Concrete: Comply with requirements in Section 03 30 00 ”Cast-In-Place Concrete” for normal weight, air-entrained, concrete with a minimum 28-day compressive strength of 4000 psi.

2.5 FABRICATION, GENERAL

A. Shop Assembly: Preassemble items in the shop to greatest extent possible. Disassemble units only as necessary for shipping and handling limitations. Use connections that maintain structural value of joined pieces. Clearly mark units for reassembly and coordinated installation.

B. Form metal fabrications from materials of size, thickness, and shapes indicated but not less than that needed to comply with performance requirements indicated. Work to dimensions indicated or accepted on shop drawings, using proven details of fabrication and support. Use type of materials indicated or specified for various components of each metal fabrication.

C. Cut, drill, and punch metals cleanly and accurately. Remove burrs and ease edges to a radius of approximately 1/32 inch unless otherwise indicated. Remove sharp or rough areas on exposed surfaces.

D. Form exposed work true to line and level with accurate angles and surfaces and straight sharp edges.

E. Form bent-metal corners to smallest radius possible without causing grain separation or otherwise impairing work.

F. Remove sharp or rough areas on exposed traffic surfaces.

G. Weld corners and seams continuously to comply with the following:

1. Use materials and methods that minimize distortion and develop strength and corrosion resistance of base metals.
2. Obtain fusion without undercut or overlap.
3. Remove welding flux immediately.
4. At exposed connections, finish exposed welds and surfaces smooth and blended so that no roughness shows after finishing, and contour of welded surface matches those of adjacent surfaces.

H. Form exposed connections with hairline joints, flush and smooth, using concealed fasteners wherever possible. Use exposed fasteners of type indicated or, if not indicated, Phillips flat-head (countersunk) screws or bolts. Locate joints where least conspicuous.

I. Fabricate seams and other connections that are exposed to weather in a manner to exclude water. Provide weep holes where water may accumulate.

J. Locate joints where least conspicuous. Provide for anchorage of type indicated; coordinate with supporting structure. Fabricate and space anchoring devices to secure metal fabrications rigidly in place and to support indicated loads.

K. Shop Assembly: Preassemble items in shop to greatest extent possible to minimize field splicing and assembly. Disassemble units only as necessary for shipping and handling limitations. Use connections that maintain structural value of joined pieces. Clearly mark units for reassembly and coordinated installation.

2.6 MISCELLANEOUS FRAMING AND SUPPORTS

A. Provide framing and supports for applications indicated that are not a part of framework as required to complete the Work.

B. Fabricate units to sizes, shapes, and profiles indicated and required to receive other adjacent construction retained by framing and supports. Fabricate from structural shapes, plates, and bars of welded construction using mitered joints for field connection. Cut, drill, and tap units to receive hardware, hangers, and similar items.

2.7 FINISHES, GENERAL

A. Finish metal fabrications after assembly.

B. Finish exposed surfaces to remove tool and die marks and stretch lines, and to blend into surrounding surface.

PART 3 - EXECUTION

3.1 PREPARATION

A. Coordinate and furnish anchorages, setting drawings, diagrams, templates, instructions, and directions for installing anchorages, including concrete inserts, sleeves, anchor bolts, and miscellaneous items having integral anchors that are to be embedded in concrete or masonry construction. Coordinate delivery of such items to Project site.

B. Examine paving or other substrates for compliance with manufacturer's requirements for placement and locations of embedded items, conditions of substrate, and other conditions affecting installation of bollards.

C. Set sleeves in concrete with tops flush with finish surface elevations. Protect sleeves from water and concrete entry.

3.2 INSTALLATION, GENERAL

A. Install metal fabrications according to manufacturer's installation instructions and setting diagrams unless more stringent requirements are indicated.

B. Do not install damaged, cracked, chipped, deformed, or marred bollards. Field touch up minor imperfections in accordance with manufacturers; instructions. Replace bollards that cannot be field repaired.

C. Cutting, Fitting, and Placement: Perform cutting, drilling, and fitting required for installing miscellaneous metal fabrications. Set metal fabrication accurately in location, alignment, and elevation; with edges and surfaces level, plumb, true, and free of rack; and measured from established lines and levels.

D. Provide temporary bracing or anchors in formwork for items that are to be built into concrete masonry or similar construction.

E. Fit exposed connections accurately together to form hairline joints. Weld connections that are not to be left as exposed joints but cannot be shop-welded because of shipping size limitations. Do not weld, cut, or abrade the surfaces of exterior units that have been hot-dip galvanized after fabrication and are intended for bolted or screwed field connections.

F. Field Welding: Comply with the following requirements:

1. Use materials and methods that minimize distortion and develop strength and corrosion resistance of base metals.
2. Obtain fusion without undercut or overlap.
3. Remove welding flux immediately.
4. At exposed connections, finish exposed welds and surfaces smooth and blended so that no roughness shows after finishing, and contour of welded surface matches those adjacent.

G. Fastening to In-Place Construction: Provide anchorage devices and fasteners where necessary for securing miscellaneous metal fabrications to in-place construction. Include threaded fasteners for concrete and masonry inserts, toggle bolts, through-bolts, lag bolts, wood screws, and other connectors as required.

3.3 INSTALLATION OF METAL BOLLARDS

A. Anchor internal sleeves for removable bollards in concrete by inserting in pipe sleeves preset into concrete. Fill annular space around internal sleeves solidly with shrinkage-resistant grout; mixed and placed to comply with grout manufacturer's written instructions. Slope grout up approximately 1/8 inch toward internal sleeve.

B. Anchor internal sleeves for removable bollards in place with concrete footings. Center and align sleeves in holes 3 inches above bottom of excavation. Place concrete and vibrate or tamp for consolidation. Support and brace sleeves in position until concrete has cured.

C. Place removable bollards over internal sleeves and secure with 3/4-inch machine bolts and nuts. After tightening nuts, drill holes in bolts for inserting padlocks. Owner furnishes padlocks.

3.4 INSTALLING MISCELLANEOUS FRAMING AND SUPPORTS

A. Install framing and supports to comply with requirements of items to be supported, including manufacturers' written instructions and requirements indicated on Shop Drawings.

3.5 ADJUSTING AND CLEANING

A. Protect bollards against damage.
B. Immediately prior to Substantial Completion, clean bollards in accordance with manufacturer's instructions to remove dust, dirt, adhesives, and other foreign materials.
C. Touch up damaged finishes according to manufacturer's instructions.
D. Touchup Painting: Immediately after erection, clean field welds, bolted connections, and abraded areas. Paint uncoated and abraded areas with the same material as used for shop painting to comply with SSPC-PA 1 for touching up shop-painted surfaces.

END OF SECTION 05 50 00

Section 07 92 00 - Joint Sealants

PART 1 - GENERAL

1.1 RELATED DOCUMENTS

A. Drawings and general provisions of the Contract, including General and Supplementary Conditions and other Division 01 Specification Sections, apply to this Section.

1.2 SUMMARY

A. Section Includes:

1. Polyurethane sealants.
2. Silicone joint sealants.

B. Related Sections:

1. Division 32 Section “Concrete Paving Joint Sealants” for concrete control and expansion joint fillers.

C. Related Keynote References: In addition to the numerical keynotes on the Drawings which reference this specific Project Manual Section 07 92 00, this Specification Section shall also be applicable to and contain General, Products, and Execution requirements for the following additional keynote groups indicated on the Drawings.

1. Keynotes indicated as 07 91 00 references.

1.3 SUBMITTALS

A. Product Data: For each joint-sealant product indicated.
B. Samples for Initial Selection: Manufacturer's color charts consisting of strips of cured sealants showing the full range of colors available for each product exposed to view.
C. Samples for Verification: For each kind and color of joint sealant required, provide Samples with joint sealants in 1/2-inch- wide joints formed between two 6-inch- long strips of material matching the appearance of exposed surfaces adjacent to joint sealants.
D. Qualification Data: For qualified Installer.
E. Product Certificates: For each kind of joint sealant and accessory, from manufacturer.
F. Product Test Reports: Based on evaluation of comprehensive tests performed by a qualified testing agency, indicating that sealants comply with requirements.
G. Warranties: Sample of special warranties.

1.4 QUALITY ASSURANCE

A. Installer Qualifications: Manufacturer's authorized representative who is trained and approved for installation of units required for this Project.
B. Source Limitations: Obtain each kind of joint sealant from single source from single manufacturer.
C. Preinstallation Conference: Conduct conference at Project site.

1.5 PROJECT CONDITIONS

A. Do not proceed with installation of joint sealants under the following conditions:

1. When ambient and substrate temperature conditions are outside limits permitted by joint-sealant manufacturer.
2. When joint substrates are wet.
3. Where joint widths are less than those allowed by joint-sealant manufacturer for applications indicated.
4. Where contaminants capable of interfering with adhesion have not yet been removed from joint substrates.

1.6 WARRANTY

A. Manufacturer's Warranty: Manufacturer's standard form in which joint-sealant manufacturer agrees to furnish joint sealants to repair or replace those that do not comply with performance and other requirements specified in this Section within specified warranty period.

1. Warranty Period: Five years.

B. Warranty excludes deterioration or failure of joint sealants from the following:

1. Movement of the structure caused by structural settlement or errors attributable to design or construction resulting in stresses on the sealant exceeding sealant manufacturer's written specifications for sealant elongation and compression.
2. Disintegration of joint substrates from natural causes exceeding design specifications.
3. Mechanical damage caused by individuals, tools, or other outside agents.
4. Changes in sealant appearance caused by accumulation of dirt or other atmospheric contaminants.

PART 2 - PRODUCTS

2.1 MATERIALS, GENERAL

A. Compatibility: Provide joint sealants, backings, and other related materials that are compatible with one another and with joint substrates under conditions of service and application, as demonstrated by joint-sealant manufacturer, based on testing and field experience.

B. Liquid-Applied Joint Sealants: Comply with ASTM C 920 and other requirements indicated for each liquid-applied joint sealant specified, including those referencing ASTM C 920 classifications for type, grade, class, and uses related to exposure and joint substrates.

C. Stain-Test-Response Characteristics: Where sealants are specified to be nonstaining to porous substrates, provide products that have undergone testing according to ASTM C 1248 and have not stained porous joint substrates indicated for Project.

D. Colors of Exposed Joint Sealants: As selected by Architect from manufacturer's full range.

2.2 URETHANE JOINT SEALANTS

A. Sealant for Working Joints and Exposed Vertical Exterior Locations.

1. Multicomponent, Nonsag, Urethane Joint Sealant: ASTM C 920, Type M, Grade NS, Class 25, for Use NT:

2. Products: Subject to compliance with requirements, provide one of the following:

a. BASF Building Systems; Sonolastic NP 2.
b. Bostik, Inc.; Chem-Calk 500.
c. Pecora Corporation; Dynatred.
d. Sika Corporation, Construction Products Division; Sikaflex - 2c EZ Mix.
e. Tremco Incorporated; Vulkem 227.

3. Custom colors as selected by Architect.

B. Sealant for Site Paving Expansion and Control Joints.

1. Immersible, Single-Component, Pourable, Traffic-Grade, Urethane Joint Sealant: ASTM C 920, Type S, Grade P, Class 25, for Uses T and I.
2. Products: Subject to compliance with requirements, provide one of the following:

a. Sika Corporation, Construction Products Division; Sikaflex - 1CSL.
b. Tremco Incorporated; Vulkem 45.

2.3 SILICONE JOINT SEALANTS

A. Single-Component, Nonsag, Neutral-Curing Silicone Joint Sealant: ASTM C 920, Type S, Grade NS, Class 100/50, for Use NT.

1. Application: Exterior non-traffic joints.
2. Products: Subject to compliance with requirements, provide one of the following:

a. Dow Corning Corporation; 790.
b. GE Advanced Materials - Silicones; SilPruf LM SCS2700.
c. Pecora Corporation; 301 NS.
d. Tremco Incorporated; Spectrem 1.

B. Single-Component, Nonsag, Traffic-Grade, Neutral-Curing Silicone Joint Sealant: ASTM C 920, Type S, Grade NS, Class 100/50, for Use T.

1. Products: Subject to compliance with requirements, provide one of the following:

a. Dow Corning Corporation; 790.
b. Pecora Corporation; 301 NS.
c. Tremco Incorporated; Spectrem 800.

2.4 PREFORMED JOINT SEALANTS

A. Preformed Foam Joint Sealant: Manufacturer's standard preformed, precompressed, open-cell foam sealant manufactured from urethane foam with minimum density of 10 lb/cu. ft. and impregnated with a nondrying, water-repellent agent. Factory produce in precompressed sizes in roll or stick form to fit joint widths indicated; coated on one side with a pressure-sensitive adhesive and covered with protective wrapping.

1. Products: Subject to compliance with requirements, provide one of the following:

a. Dayton Superior Specialty Chemicals; Polytite Standard.
b. EMSEAL Joint Systems, Ltd.; Emseal 25V.
c. Willseal USA, LLC; Willseal 150.

2.5 JOINT SEALANT BACKING

A. Provide sealant backings of material that are nonstaining; are compatible with joint substrates, sealants, primers, and other joint fillers; and are approved for applications indicated by sealant manufacturer based on field experience and laboratory testing.

B. Cylindrical Sealant Backings: ASTM C 1330, Type C (closed-cell material with a surface skin), and of size and density to control sealant depth and otherwise contribute to producing optimum sealant performance.

C. Bond-Breaker Tape: Polyethylene tape or other plastic tape recommended by sealant manufacturer for preventing sealant from adhering to rigid, inflexible joint-filler materials or joint surfaces at back of joint. Provide self-adhesive tape where applicable.

2.6 MISCELLANEOUS MATERIALS

A. Primer: Material recommended by joint-sealant manufacturer where required for adhesion of sealant to joint substrates indicated, as determined from preconstruction joint-sealant-substrate tests and field tests.

B. Cleaners for Nonporous Surfaces: Chemical cleaners acceptable to manufacturers of sealants and sealant backing materials, free of oily residues or other substances capable of staining or harming joint substrates and adjacent nonporous surfaces in any way, and formulated to promote optimum adhesion of sealants to joint substrates.

C. Masking Tape: Nonstaining, nonabsorbent material compatible with joint sealants and surfaces adjacent to joints.

PART 3 - EXECUTION

3.1 EXAMINATION

A. Examine joints indicated to receive joint sealants, with Installer present, for compliance with requirements for joint configuration, installation tolerances, and other conditions affecting joint-sealant performance.

B. Proceed with installation only after unsatisfactory conditions have been corrected.

3.2 PREPARATION

A. Surface Cleaning of Joints: Clean out joints immediately before installing joint sealants to comply with joint-sealant manufacturer's written instructions and the following requirements:

1. Remove all foreign material from joint substrates that could interfere with adhesion of joint sealant, including dust, paints (except for permanent, protective coatings tested and approved for sealant adhesion and compatibility by sealant manufacturer), old joint sealants, oil, grease, waterproofing, water repellents, water, surface dirt, and frost.
2. Clean porous joint substrate surfaces by brushing, grinding, mechanical abrading, or a combination of these methods to produce a clean, sound substrate capable of developing optimum bond with joint sealants. Remove loose particles remaining after cleaning operations above by vacuuming or blowing out joints with oil-free compressed air. Porous joint substrates include the following:

   a. Concrete.

3. Remove laitance and form-release agents from concrete.

B. Joint Priming: Prime joint substrates where recommended by joint-sealant manufacturer or as indicated by preconstruction joint-sealant-substrate tests or prior experience. Apply primer to comply with joint-sealant manufacturer's written instructions. Confine primers to areas of joint-sealant bond; do not allow spillage or migration onto adjoining surfaces.

C. Masking Tape: Use masking tape where required to prevent contact of sealant or primer with adjoining surfaces that otherwise would be permanently stained or damaged by such contact or by cleaning methods required to remove sealant smears. Remove tape immediately after tooling without disturbing joint seal.

3.3 INSTALLATION OF JOINT SEALANTS

A. Comply with joint-sealant manufacturer's written installation instructions for products and applications indicated, unless more stringent requirements apply.

B. Sealant Installation Standard: Comply with recommendations in ASTM C 1193 for use of joint sealants as applicable to materials, applications, and conditions indicated.

C. Install sealant backings of kind indicated to support sealants during application and at position required to produce cross-sectional shapes and depths of installed sealants relative to joint widths that allow optimum sealant movement capability.

1. Do not leave gaps between ends of sealant backings.
2. Do not stretch, twist, puncture, or tear sealant backings.
3. Remove absorbent sealant backings that have become wet before sealant application and replace them with dry materials.

D. Install bond-breaker tape behind sealants where sealant backings are not used between sealants and backs of joints.

E. Install sealants using proven techniques that comply with the following and at the same time backings are installed:

1. Place sealants so they directly contact and fully wet joint substrates.
2. Completely fill recesses in each joint configuration.
3. Produce uniform, cross-sectional shapes and depths relative to joint widths that allow optimum sealant movement capability.

F. Tooling of Nonsag Sealants: Immediately after sealant application and before skinning or curing begins, tool sealants according to requirements specified in subparagraphs below to form smooth, uniform beads of configuration indicated; to eliminate air pockets; and to ensure contact and adhesion of sealant with sides of joint.

1. Remove excess sealant from surfaces adjacent to joints.
2. Use tooling agents that are approved in writing by sealant manufacturer and that do not discolor sealants or adjacent surfaces.
3. Provide concave joint profile per Figure 8A in ASTM C 1193, unless otherwise indicated.

G. Installation of Preformed Foam Sealants: Install each length of sealant immediately after removing protective wrapping. Do not pull or stretch material. Produce seal continuity at ends, turns, and intersections of joints. For applications at low ambient temperatures, apply heat to sealant in compliance with sealant manufacturer's written instructions.

3.4 CLEANING

A. Clean off excess sealant or sealant smears adjacent to joints as the Work progresses by methods and with cleaning materials approved in writing by manufacturers of joint sealants and of products in which joints occur.

3.5 PROTECTION

A. Protect joint sealants during and after curing period from contact with contaminating substances and from damage resulting from construction operations or other causes so sealants are without deterioration or damage at time of Substantial Completion. If, despite such protection, damage or deterioration occurs, cut out and remove damaged or deteriorated joint sealants immediately so installations with repaired areas are indistinguishable from original work.

END OF SECTION 07 92 00

Section 10 14 26 - Post and Panel Mounted Signs

PART 1 - GENERAL

1.1 RELATED DOCUMENTS

A. Drawings and general provisions of the Contract, including General and Supplementary Conditions and Division 1 Specification Sections, apply to this Section.

1.2 SUMMARY

A. This Section includes the following:

1. Post Mounted Traffic and Directional Signage (single faced).

B. Related Keynote References: In addition to the numerical keynotes on the Drawings which reference this specific Project Manual Section 10 14 26, this Specification Section shall also be applicable to and contain General, Products, and Execution requirements for the following additional keynote groups indicated on the Drawings.

1. Keynotes indicated as 10 14 00 references.

1.3 PERFORMANCE REQUIREMENTS

A. Structural Performance: Provide post and panel and pylon signs capable of withstanding the effects of gravity loads and the following loads and stresses within limits and under conditions indicated:

1. Wind Loads: Minimum of 139 Miles per hour wind speed.

B. Thermal Movements: Provide post and panel signs that allow for thermal movements resulting from the following maximum change (range) in ambient and surface temperatures by preventing buckling, opening of joints, over stressing of components, failure of connections, and other detrimental effects. Base engineering calculations on surface temperatures of materials due to both solar heat gain and nighttime-sky heat loss.

1. Temperature Change (Range): 120 deg F, ambient; 180 deg F material surfaces.

1.4 SUBMITTALS

A. General: Submit the following in accordance with Conditions of the Contract and Division 1 Specification Sections.

B. Product Data: Include manufacturer's construction details relative to materials, dimensions of individual components, profiles, and finishes for each type of sign required. Provide manufacturer's recommendations for maintenance and cleaning requirements for exterior sign surfaces.

C. Shop Drawings: Include plans, elevations, and not less than 3/4- inch scale sections of typical members and other components. Show anchors, reinforcement, accessories, layout, and installation details.

1. Provide message list, including not less than half-size details of wording and lettering layout. Include full-size details of special graphics.

D. Samples: For each sign component provide samples showing finishes, colors, and surface texture.

E. For initial selection of color, pattern, and texture:

1. Aluminum: Samples of each finish type and color, on 6- inch- long sections of extrusions and not less than 4-inch squares of sheet or plate, showing the full range of colors available.

1.5 QUALITY ASSURANCE

A. Installer Qualifications: Engage an experienced installer who is an authorized representative of the sign manufacturer and who has completed installation of post and panel signs similar in material, design, and extent to that indicated for this Project and with a record of successful in-service performance.

B. Source Limitations: Obtain post and panel signs through one source from a single manufacturer.

C. Product Options: Drawings indicate size, profiles, and dimensional requirements of post and panel signs.

D. Do not modify intended aesthetic effects, as judged solely by the Architect, except with Architect's approval and only to the extent needed to comply with performance requirements. Where modifications are proposed, submit comprehensive explanatory data to Architect for review.

1.6 COORDINATION

A. Coordinate installation of anchorages for post and panel/pylon signage. Furnish setting drawings, templates, and directions for installing anchorages and other items that are to be embedded in concrete.

1.7 DELIVERY AND HANDLING

A. Delivery: Provide protective covering or crating as recommended by the manufacturer to protect sign components and surfaces against damage during transportation and delivery.

1. Coordinate delivery time so signs can be installed within 24 hours of receipt at Project site.

B. Handle signs carefully to prevent breakage, surface abrasion, denting, soiling, and other defects. Comply with the manufacturer's written handling instructions for unloading components subject to damage.

C. Inspect sign components for damage on delivery.

D. Do not install damaged sign components.

E. Repair minor damage to signs, provided the finished repair is equal in all respects to the original work and is approved by Architect; otherwise, remove and replace damaged sign components.

1.8 WARRANTY

A. General Warranty: The special warranty specified in this Article shall not deprive the Owner of other rights the Owner may have under other provisions of the Contract Documents and shall be in addition to, and run concurrent with, other warranties made by the Contractor under requirements of the Contract Documents.

1. Warranty Period: 5 years.

PART 2 - PRODUCTS

2.1 MATERIALS

A. Aluminum Extrusions: Provide alloy and temper recommended by the aluminum producer or finisher for the type of use and finish indicated and with not less than the strength and durability properties specified in ASTM B 221 for 6063-T5.

B. Graphic Content and Style: Provide sign copy to comply with the requirements indicated for sizes, styles, spacing, content, positions, material finishes, and color of letters.

1. Surface Applied Die-Cut Vinyl Copy: Provide die-cut characters from reflective vinyl film with pressure-sensitive adhesive backing. Apply copy to the exposed face of the sign panel.

a. Copy: Directional and information signs as indicated on Drawings.

C. Fasteners: Use concealed fasteners fabricated from metals that are not corrosive to the sign material and mounting surface.

D. Concrete: Provide concrete for post holes consisting of Portland cement complying with ASTM C 150, aggregates complying with ASTM C 33, and clean water. Mix the materials to obtain concrete with a minimum 28-day compressive strength of 2500 psi. Use at least 4 sacks of cement per cubic yard, 1-inch maximum size aggregate, maximum 3-inch slump, and 2 to 4 percent entrained air.

2.2 COMPONENTS

A. Aluminum Posts: Manufacturer’s standard 0.0125-inch-thick, extruded-aluminum tubing. Include post caps, fillers, and related accessories required for complete fabrication.

1. Post Size: As indicated on Drawing
2. Post Shape: Square.
3. Finish: Baked Enamel.

a. Color: As selected by Architect from manufacturer’s standard color selections, 12 minimum.

4. Post Mounting Method: Provide sign posts of lengths required for permanent installation by the direct-burial mounting method.

B. Panel Signage: Provide smooth, even, level sign panel surfaces constructed to remain flat under installed conditions within a tolerance of plus or minus 1/16 inch measured diagonally from corner to corner.

1. Unframed Single Sheet Panels: Provide unframed single-sheet sign panels with edges mechanically and smoothly finished to conform with the following requirements:

a. Panel Material: 0.080gage aluminum sheet.
b. Finish: Manufacturer's standard semigloss finish with ultraviolet inhibitors.

C. Graphic Content and Style: Provide sign copy to comply with the requirements indicated for sizes, styles, spacing, content, positions, material finishes, and color of letters for each signh type indicated on Drawings.

D. Surface Applied Die-Cut Vinyl Copy: Provide die-cut characters from reflective vinyl film with pressure-sensitive adhesive backing. Apply copy to the exposed face of the sign panel.

2.3 FABRICATION

A. General: Comply with requirements indicated for materials, thicknesses, finishes, colors, designs, shapes, sizes, and details of construction.

1. Allow for thermal movement resulting from a maximum ambient temperature change (range) of 100 deg F (55.5 deg C). Design, fabricate, and install post and panel sign assemblies to prevent buckling, opening up of joints, and over stressing welds and fasteners.
2. Welded Connections: Comply with AWS for recommended practices in shop welding. Provide welds behind finished surfaces without distortion or discoloration of the exposed side. Clean exposed welded surfaces of welding flux and dress on all exposed and contact surfaces.
3. Mill joints to a tight, hairline fit. Form joints exposed to the weather to exclude water penetration.
4. Conceal fasteners where possible; otherwise locate fasteners where they will be inconspicuous.

B. Posts: Fabricate posts to lengths required for mounting method indicated.

1. Direct Burial: For permanent sign installation, provide posts 36 inches longer than height of sign indicated to permit direct embedment in concrete foundations.

2.4 FINISHES

A. Colors and Textures: For exposed sign material that requires selection of materials with integral or applied colors, textures, or other characteristics related to appearance, provide color matches as selected by the Architect from the manufacturer's standards.

B. Metal Finishes: Comply with NAAMM "Metal Finishes Manual" for finish designations and application recommendations.

C. Baked Enamel Finish: AA-C12C42R1x (Chemical Finish: Cleaned with inhibited chemicals; Chemical Finish: conversion coating, acid chromate-fluoride-phosphate pretreatment; Organic Coating: as specified below). Apply in compliance with paint manufacturer's specifications for cleaning, conversion coating, and painting.

1. Color: As selected by the Architect from within standard industry colors, including metallics, and color density range.

PART 3 - EXECUTION

3.1 PREPARATION

A. Furnish templates, anchor bolts, internal reinforcement, and other items required to be set in concrete post foundations at proper time for setting.

3.2 INSTALLATION

A. General: Locate sign units and accessories where indicated, using mounting methods of the type described and in compliance with the manufacturer's instructions.

1. Install signs level, plumb, and at the height indicated, with sign surfaces free from distortion or other defects in appearance.

a. Exterior Post-Mounted Signage: Mount signage on posts at a height as required to comply with City of Lafayette traffic regulations..

B. Excavation: In firm undisturbed or compacted soil, drill or hand excavate (by post hole digger) for each post a minimum diameter not less than 4 times the largest post cross section.

1. Excavate hole to a depth of approximately 3 inches lower than the required post bottom, with bottom of posts set not less than 36 inches below finished grade surfaces.

C. Setting Posts: Center and align posts in holes 3 inches above bottom of excavation.

1. Protect portion of posts above ground from concrete splatter. Place concrete around posts and vibrate or tamp for consolidation. Check each post for vertical and top alignment and hold ion position until concrete has achieved its initial set.

D. Install signs level, plumb, and at the height indicated, with sign surfaces free from distortion or other defects in appearance.

3.3 CLEANING AND PROTECTION

A. At completion of the installation, clean soiled sign surfaces in accordance with the manufacturer's instructions. Protect units from damage until acceptance by the Owner.

END OF SECTION 10 14 26

Section 31 10 00 - Site Clearing

PART 1 - GENERAL

1.1 RELATED DOCUMENTS

A. Drawings and general provisions of Contract, including General and Supplementary Conditions and Division 01 Specification Sections, apply to this section.

1.2 SUMMARY

A. This Section includes the following:

1. Protecting existing trees and shrubs to remain.
2. Removing existing trees and shrubs.
3. Clearing and grubbing
4. Stripping and stockpiling topsoil.
5. Removing above- and below-grade improvements.
6. Disconnecting, capping or sealing, and abandoning site utilities in place.
7. Temporary erosion and sedimentation control measures.

B. Related Sections include the following:

1. Division 01 Section “Temporary Facilities and Controls” for temporary utilities, temporary construction and support facilities, temporary security and protection facilities, and temporary erosion and sedimentation control procedures.
2. Division 01 Section “Execution” for verifying utility locations and for recording field measurements.
3. Division 31 Section “Earth Moving” for soil materials, excavating, backfilling, and site grading.

1.3 DEFINITIONS

A. Topsoil: Natural or cultivated surface-soil layer containing organic matter and sand, silt, and clay particles; friable, pervious, and black or a darker shade of brown, gray, or red than underlying subsoil; reasonably free of subsoil, clay lumps, gravel, and other objects more than 2 inches in diameter; and free of subsoil and weeds, roots, toxic materials, or other non-soil materials.

B. Tree Protection Zone: Area surrounding individual trees or groups of trees to be protected during construction and defined by the drip line of individual trees or the perimeter drip line of groups of trees, unless otherwise indicated.

1. Drip line of trees shall be considered at edge of paved areas until pavement is removed. Once pavement is removed drip line shall be considered at perimeter of tree canopy.

1.4 MATERIAL OWNERSHIP

A. Except for stripped topsoil or other materials indicated to remain Owner’s property, cleared materials shall become Contractor’s property and shall be removed from the Project site.

1.5 INFORMATIONAL SUBMITTALS

A. Existing Conditions: Documentation of existing trees and plantings, adjoining construction, and site improvements that establishes preconstruction conditions that might be misconstrued as damage caused by site clearing.

1. Use sufficiently detailed photographs or videotape.
2. Include plans and notations to indicate specific wounds and damaged conditions of each tree or other plant designated to remain.

1.6 PROJECT CONDITIONS

A. Traffic: Conduct site clearing operations to ensure minimum interference with roads, streets, walks, and other adjacent occupied or used facilities.

1. Do not close or obstruct streets, walks or other occupied or used facilities without permission from authorities having jurisdiction.
2. Provide alternate routes around closed or obstructed traffic ways if required by authorities having jurisdiction.

B. Protection of Existing Improvements: Provide protections necessary to prevent damage to existing improvements indicated to remain in place.

1. Protect improvements on adjoining properties and on Owner's property.
2. Restore damaged improvements to their original condition, as acceptable to property owner.

C. Salvable Improvements: Carefully remove items indicated to be salvaged, and store on Owner's premises where indicated or directed.

D. Notify utility locator service as well as Owner’s personnel for location of utilities within area where Project is located before site clearing.

E. Do not commence site clearing operations until temporary erosion and sedimentation control measures are in place.

F. The following practices are prohibited within protection zones:

1. Storage of construction materials, debris, or excavated materials.
2. Parking of vehicles or equipment.
3. Foot traffic.
4. Erection of sheds or structures.
5. Impoundment of water.
6. Excavation or other digging unless otherwise indicated.
7. Attachment of signs to or wrapping materials around trees or plants unless otherwise indicated.

G. Do not direct vehicle or equipment exhaust towards protection zones.

H. Prohibit heat sources, flames, ignition sources, or smoking within or near tree protection zones.

1.7 EXISTING SERVICES

A. General: Indicated locations are approximate; determine exact locations before commencing Work.

1. Arrange and pay for disconnecting, removing, capping, and unplugging utility services. Notify affected utility companies in advance and obtain approval before starting this Work.
2. Place markers to indicate location of disconnected services. Identify service lines and capping locations on Project Record Documents.

PART 2 - PRODUCTS

2.2 SOIL MATERIALS

A. Satisfactory Soil Materials: Requirements for satisfactory soil materials are specified in Division 31 Section "Earth Moving."

1. Obtain approved borrow soil materials off-site when satisfactory soil materials are not available on-site.

PART 3 - EXECUTION

3.1 PREPARATION

A. Protect and maintain benchmarks and survey control points from disturbance during construction.
B. Locate and clearly flag trees and vegetation to remain or to be relocated.
C. Protect existing site improvements to remain from damage during construction.

1. Restore damaged improvements to their original condition, as acceptable to Owner.

3.2 TEMPORARY EROSION AND SEDIMENTATION CONTROL

A. Provide temporary erosion and sedimentation control measures to prevent soil erosion and discharge of soil-bearing water runoff or airborne dust to adjacent properties and walkways, according to requirements of authorities having jurisdiction.
B. Verify that flows of water redirected from construction areas or generated by construction activity does not enter or cross protection zones.
C. Inspect, repair, and maintain erosion and sedimentation control measures during construction until permanent vegetation has been established.
D. Remove erosion and sedimentation controls and restore and stabilize areas disturbed during removal.

3.3 TREE PROTECTION

A. Erect and maintain temporary fencing around tree protection zones before starting site clearing. Remove fence when construction is complete.

1. Do not store construction materials, debris, or excavated material within fenced area.
2. Do not permit vehicles, equipment, or foot traffic within fenced area.
3. Maintain fenced area free of weeds and trash.

B. Do not excavate within tree protection zones, unless otherwise indicated.
C. Where excavation for new construction is required within tree protection zones, hand clear and excavate to minimize damage to root systems. Use narrow-tine spading forks, comb soil to expose roots, and cleanly cut roots as close to excavation as possible.

1. Cover exposed roots with burlap and water regularly.
2. Temporarily support and protect roots from damage until they are permanently redirected and covered with soil.
3. Coat cut faces of roots more than 1-1/2 inches in diameter with an emulsified asphalt or other approved coating formulated for use on damaged plant tissues.
4. Backfill with soil as soon as possible.

D. Repair or replace trees and vegetation indicated to remain that are damaged by construction operations, in a manner approved by Architect.

5. Employ an arborist, licensed in jurisdiction where Project is located, to submit details of proposed repairs and to repair damage to trees and shrubs.

3.2 UTILITIES

A. Locate, identify, disconnect, and seal or cap off utilities indicated to be removed.

1. Arrange with utility companies to shut off indicated utilities.

B. Existing Utilities: Do not interrupt utilities serving facilities occupied by Owner or others unless permitted under the following conditions and then only after arranging to provide temporary utility services according to requirements indicated:

2. Notify Architect not less than two days in advance of proposed utility interruptions.
3. Do not proceed with utility interruptions without Architect's written permission.

C. Excavate for and remove underground utilities indicated to be removed.

3.3 CLEARING AND GRUBBING

A. Remove obstructions, trees, shrubs, grass, and other vegetation to permit installation of new construction.

1. Do not remove trees, shrubs, and other vegetation indicated to remain or to be relocated.
2. Cut minor roots and branches of trees indicated to remain in a clean and careful manner where such roots and branches obstruct installation of new construction.
3. Grind stumps and remove roots, obstructions, and debris extending to a depth of 18 inches below exposed subgrade.
4. Use only hand methods for grubbing within tree protection zone.
5. Chip removed tree branches and dispose of off-site.

B. Fill depressions caused by clearing and grubbing operations with satisfactory soil material unless further excavation or earthwork is indicated.

1. Place fill material in horizontal layers not exceeding a loose depth of 8 inches, and compact each layer to a density equal to adjacent original ground.

3.2 TOPSOIL STRIPPING

A. Remove sod and grass before stripping topsoil.
B. Strip topsoil to whatever depths are encountered in a manner to prevent intermingling with underlying subsoil or other waste materials.

1. Remove subsoil and nonsoil materials from topsoil, including trash, debris, weeds, roots, and other waste materials.

C. Stockpile topsoil materials away from edge of excavations without intermixing with subsoil. Grade and shape stockpiles to drain surface water. Cover to prevent windblown dust.

1. Limit height of topsoil stockpiles to 72 inches.
2. Do not stockpile topsoil within tree protection zones.
3. Dispose of excess topsoil as specified for waste material disposal.
4. Stockpile surplus topsoil to allow for respreading deeper topsoil.

3.2 SITE IMPROVEMENTS

A. Remove existing above- and below-grade improvements as indicated and as necessary to facilitate new construction.

B. Remove slabs, paving, curbs, gutters, and aggregate base as indicated.

1. Unless existing full-depth joints coincide with line of demolition, neatly saw-cut length of existing pavement to remain before removing existing pavement. Saw-cut faces vertically.
2. Paint cut ends of steel reinforcement in concrete to remain to prevent corrosion.

3.3 DISPOSAL

A. Disposal: Remove surplus soil material, unsuitable topsoil, obstructions, demolished materials, and waste materials including trash and debris, and legally dispose of them off Owner's property.

B. Separate recyclable materials produced during site clearing from other nonrecyclable materials. Store or stockpile without intermixing with other materials and transport them to recycling facilities. Do not interfere with other Project work.

END OF SECTION 31 10 00

Section 31 15 00 – Earthwork for Civil Sections

Drawings and general provisions of the Contract, including General and Supplementary Conditions and Division 1 Specification Sections, apply to this Section.

EARTHWORK SPECIFICATIONS

Earthwork Technical Specifications shall be as per the 2012 Edition of the LCG Department of Public Works "Standard Specifications for Roads, Drainage, Bridges, and Other Infrastructure Improvements", Revised August 11, 2015 or latest version. The Technical Specifications are not attached to this set, but shall be considered inclusive of the Construction Documents. The main sections for this project for earthwork shall include but not limited to Part II "Earthwork" and related sections including; Clearing and Grubbing, Removing and Relocating Structures and Obstructions, Excavation and Embankment and Temporary Erosion Control. A copy can be viewed at the office of Ronkartz-Oestriecher, APEC at 1919B Dulles Drive, Lafayette, LA 70506 or can be obtained from Lafayette Consolidated Government Department of Public Works at 1515 E University Avenue, Lafayette Louisiana 70502. A .pdf version of the "Standard Specifications for Roads, Drainage, Bridges, and Other Infrastructure Improvements" can be provided upon request. All soil removal, fill material and compaction recommendations shall be per the geotechnical report for this specific project.

Pay items listed it the "Standard Specifications for Roads, Drainage, Bridges, and Other Infrastructure Improvements" shall NOT be valid for this project. Compensation shall be made as per the Bid Form included in this document. If any contradictions between the two arise, the Bid Form in this document shall govern. If an item of work is called for in the Plans and is not specifically itemized in the Bid Form, that work shall be considered incidental to the cost of the project. No additional payment will be made.

END OF SECTION 31 00 00

Section 31 21 00 - Base and Subbase Materials for Pedestrian Pavement Areas

PART 1 - GENERAL

1.1 RELATED DOCUMENTS

A. Drawings and general provisions of the Contract, including General and Supplementary Conditions and Division 1 Specification Sections, apply to this Section.

1.2 SUMMARY

A. This Section includes the following:

1. Subbase and base course for pedestrian pavements.
2. Drainage fabric.

B. Provide all materials and equipment required for site clearing, excavation and backfill and site grading specifically required or implied by Contract Documents.

C. Examine and investigate the Walk of Honor site prior to bid to become fully informed of conditions and problems to be encountered during the Work. No allowance will be made for conditions encountered during construction which were identifiable in nature prior to starting the Work.

D. Final Grading, together with placement and preparation of topsoil for lawns and planting, is specified in Division 2 Section, "Landscape Work".

E. Related Keynote References: In addition to the numerical keynotes on the Drawings which reference this specific Project Manual Section 31 21 00, this Specification Section shall also be applicable to and contain General, Products, and Execution requirements for the following additional keynote groups indicated on the Drawings.

1. Keynotes indicated as 31 23 00 references.

1.3 DEFINITIONS

A. Excavation: Consists of removal of material encountered to subgrade elevations indicated and subsequent disposal of materials removed.

1.4 QUALITY CONTROL:

A. The Owner shall hire an established testing laboratory to test the proposed fill, certify its compliance with these specifications and to obtain the optimum moisture content and indicated Proctor Density. The certification of material compliance shall be received by the Architect prior to the hauling of fill.

B. All compaction tests shall be done with a Nuclear Density/Moisture Meter.

C. Reports for compaction tests required under this specification shall include a sketch of the slab plan and paving areas and the location of each test point. Each test point shall be numbered for reference in the report. The locations of these test points shall be approved by the Architect before earthwork begins. If test points are indicated and labeled on the Drawings, no supplemental sketch is required. All reported densities shall be clearly referenced to a test point and to the height of the fill above the prepared subgrade. Reports which do not clearly provide this information shall be rejected.

D. Each layer of fill shall be certified as complying with the composition and compaction requirements of these specifications prior to the placement of the succeeding layer. If the average compaction is less than specified or if any one test is 3% below specification the layer shall be rejected.

E. If it becomes necessary to change source of material, or if original borrow pit material changes, certification of the new material shall be identical to the first.

F. Codes and Standards: Perform excavation work in compliance with applicable requirements of governing authorities having jurisdiction.

1.5 DEFECTIVE WORK AND RETESTING

A. When quality control tests performed by the testing laboratory show that materials fail to meet the specified requirements, the Contractor shall correct and/or remove and replace all defective work and shall coordinate retesting with the testing laboratory. All costs associated with reinspection and retesting of defective work shall be the sole responsibility of the Contractor and shall be withheld from the first subsequent pay request.

1.6 PROJECT CONDITIONS AND PROVISIONS

A. Provide all materials and equipment required for site clearing, excavation and backfill and site grading specifically required or implied by Contract Documents.

B. Examine and investigate the building site prior to bid to become fully informed of conditions and problems to be encountered during the Work. No allowance will be made for conditions encountered during construction which were identifiable in nature prior to starting the Work.

C. Site Information: Data on indicated subsurface conditions are not intended as representations or warranties of accuracy or continuity between soil borings. It is expressly understood that Owner or the Architect/Engineer will not be responsible for interpretations or conclusions drawn from the report by Contractor. Data is made available only for convenience of Contractor. A copy of the Geotechnical Report is included within the Project Manual under “Section SID - Soil Investigation Data.”

1. Additional test borings and other exploratory operations may be made by Contractor at no cost to Owner.

D. Existing Utilities: Locate existing underground utilities in areas of excavation work. If utilities are indicated to remain in place, provide adequate means of support and protection during earthwork operations.

1. Should uncharted, or incorrectly charted, piping or other utilities be encountered during excavation, consult utility owner immediately for directions. Cooperate with Owner and utility companies in keeping respective services and facilities in operation. Repair damaged utilities to satisfaction of utility owner.

E. Do not interrupt existing utilities serving facilities occupied by Owner or others, during occupied hours, except when permitted in writing by Architect and then only after acceptable temporary utility services have been provided.

1. Provide minimum of 48-hour notice to Owner, and receive written notice to proceed before interrupting any utility.

F. Demolish and completely remove from site existing underground utilities indicated to be removed. Coordinate with utility companies for shutoff of services if lines are active.

G. Use of Explosives: Use of explosives is not permitted and shall not be brought onto site.

H. Protection of Persons and Property: Barricade open excavations occurring as part of this work and post with warning lights.

1. Operate warning lights as recommended by authorities having jurisdiction

I. Protect structures, utilities, sidewalks, pavements, and other facilities from damage caused by settlement, lateral movement, undermining, washout, and other hazards created by earthwork operations.

J. Environmental Requirements: Do not install mixed materials in excess of 10 mph or when temperature is below 40 degrees F.

PART 2 - PRODUCTS

2.1 SOIL MATERIALS

A. FILL BENEATH PEDESTRIAN PAVEMENT AREAS

1. Aggregate Base: Contractor shall utilize crushed limestone conforming to requirements for untreated aggregate type surface course Louisiana Department of Transportation and Development's (DOTD) Louisiana Standard Specifications for Roads and Bridges (LSSRB) 2006 Edition, Section 1003.03b. The material shall consist of 100% crushed limestone aggregate and shall show not more than 45% loss when tested in accordance with AASHTO designation T 96; shall show not more than 15% loss when tested in accordance with AASHTO Designation T 104. Compact to at least 98% of the maximum dry density as determined by D698.

2.2 GEOTEXTILE DRAINAGE FABRIC

A. Geotextile Drainage Fabric: Nonwoven (for sand containment between paver units and concrete base) Woven (under aggregate base), biaxial geotextile, specifically manufactured as a drainage geotextile; made from polyolefins, polyesters, or polyamides.

B. Minimum Geotextile Fabric Properties:

	Property	Test Method	Minimum Average Roll Values
1.	Grab Tensile Strength, lbs.	ASTM D4632	315
2.	Grab Tensile Elongation,%	ASTM D4632	15
3.	Mullen Burst Strength	ASTM D3786	600
4.	Puncture resistance, lbs.	ASTM D4833	120
5.	Trapezoid tear strength, lbs.	ASTM D4533	120
	UV resistance after 500 hrs.	ASTM D4355	70 % strength resistance

PART 3 - EXECUTION

3.1 SUBGRADE PREPARATION BENEATH PAVING

A. General: In the area where fill is to be placed remove all surface vegetation and loose topsoil and all organic materials such as grass, roots, tree stumps, etc. If necessary, disc the subgrade and allow to dry (or add water) as required to obtain optimum moisture content in the top 6 inch layer.

B. After completing the above preparation, proof roll the entire area which receives fill with a loaded dump truck to detect any soft spots or holes. These soft spots or stump holes shall be mucked out and backfilled with fill beneath earth supported slabs and foundations as specified above. Soft spots and holes which have been refilled shall be compacted to 90% of Modified Proctor Density before any new fill is placed.

C. No fill shall be placed until the subgrade has been certified as complying with these specifications.

3.2 EXCAVATION

A. Excavation includes excavation to subgrade elevations indicated, regardless of character of materials and obstructions encountered.

B. Unauthorized excavation consists of removal of materials beyond indicated subgrade elevations or dimensions without specific direction of Architect/Engineer. Unauthorized excavation, as well as remedial work directed by Architect, shall be at Contractor's expense.

C. Under footings, foundation bases, or retaining walls, fill excavations by extending indicated bottom elevation of footing or base to excavation bottom, without altering required top elevation. Lean concrete fill may be used to bring elevations to proper position, when acceptable to Architect/Engineer.

D. Elsewhere, backfill and compact unauthorized excavations as specified for authorized excavations of same classification, unless otherwise directed by Architect/Engineer.

E. Additional Excavation: When excavation has reached required subgrade elevations, notify Architect/Engineer who will make an inspection of conditions.

1. If unsuitable bearing materials are encountered at required subgrade elevations, carry excavations deeper and replace excavated material as directed by Architect/Engineer.

F. Removal of unsuitable material and its replacement as directed will be paid on basis of contract conditions relative to changes in work.

G. Should excavations be oversized because of machine digging tolerances or because of error, such additional volume shall be filled with concrete poured monolithically with the structural section.

H. Stability of Excavations: Slope sides of excavations to comply with local codes and ordinances having jurisdiction. Shore and brace where sloping is not possible because of space restrictions or stability of material excavated.

1. Maintain sides and slopes of excavations in safe condition until completion of backfilling.

I. Dewatering: Prevent surface water and subsurface water from flowing into excavations and from flooding project site and surrounding area.

1. Do not allow water to accumulate in excavations. Remove water to prevent softening of foundation bottoms, undercutting footings, and soil changes detrimental to stability of subgrades and foundations. Provide and maintain pumps, well points, sumps, suction and discharge lines, and other dewatering system components necessary to convey water away from excavations.
2. Establish and maintain temporary drainage ditches and other diversions outside excavation limits to convey rain water and water removed from excavation to collecting or run-off areas. Do not use trench excavations as temporary drainage ditches.

J. Material Storage: Satisfactory excavated materials may be stockpiled where directed, until required for backfill or fill. Place, grade, and shape stockpiles for proper drainage.

1. Locate and retain soil materials away from edge of excavations. Do not store within drip line of trees indicated to remain.
2. Dispose all excess soil material and waste materials from site.

K. Excavation for Pavements: Cut surface under pavements to comply with cross-sections, elevations and grades as shown.

L. Cold Weather Protection: Protect excavation bottoms against freezing when atmospheric temperature is less than 35 degrees F. (1 degree C).

3.3 COMPACTION

A. General: Compaction during construction shall be controlled by providing minimum percentage of density specified for each area classification indicated below.

B. Percentage of Maximum Density Requirements: Compact soil to not less than the indicated percentages of maximum density for soils which exhibit a well-defined moisture density relationship (cohesive soils) determined in accordance with indicated requirements.

1. Structures, Building Slabs, Pavements: Compact top 12" of subgrade and each layer of backfill or fill material.

C. Moisture Control: Where subgrade or layer of soil material must be moisture conditioned before compaction, uniformly apply water to surface of subgrade, or layer of soil material, to prevent free water appearing on surface during or subsequent to compaction operations.

1. Remove and replace, or scarify and air dry, soil material that is too wet to permit compaction to specified density.
2. Soil material that has been removed because it is too wet to permit compaction may be stockpiled or spread and allowed to dry. Assist drying by discing, harrowing or pulverizing until moisture content is reduced to a satisfactory value.

3.4 BACKFILL AND FILL

A. General: Place acceptable soil material in layers to required subgrade elevations, for each area classification listed below.

1. Under pavements, use subbase and base material.

B. Backfill excavations as promptly as work permits, but not until completion of the following:

1. Acceptance of construction below finish grade including, where applicable, dampproofing, waterproofing, and perimeter insulation.
2. Inspection, testing, approval, and recording locations of underground utilities.
3. Removal of concrete formwork.
4. Removal of shoring and bracing, and backfilling of voids with satisfactory materials. Cut off temporary sheet piling driven below bottom of structures and remove in manner to prevent settlement of the structure or utilities, or leave in place if required.
5. Removal of trash and debris.
6. Permanent or temporary horizontal bracing is in place on horizontally supported walls.

C. Ground Surface Preparation: Remove vegetation, debris, unsatisfactory soil materials, obstructions, and deleterious materials from ground surface to a minimum of 6" depth prior to placement of fills. Plow, strip, or break-up sloped surfaces steeper than 1 vertical to 4 horizontal so that fill material will bond with existing surface.

1. When existing ground surface has a density less than that specified under "Compaction" for particular area classification, break up ground surface, pulverize, moisture-condition to optimum moisture content, and compact to required depth and percentage of maximum density.

D. Placement and Compaction: Place backfill and fill materials in layers not more than 8" in loose depth for material compacted by heavy compaction equipment, and not more than 4" in loose depth for material compacted by hand-operated tampers.

1. Before compaction, moisten or aerate each layer as necessary to provide optimum moisture content. Compact each layer to required percentage of maximum dry density or relative dry density for each area classification. Do not place backfill or fill material on surfaces that are muddy, frozen, or contain frost or ice.

2. Place backfill and fill materials evenly adjacent to structures, piping or conduit to required elevations. Take care to prevent wedging action of backfill against structures or displacement of piping or conduit by carrying material uniformly around structure, piping or conduit to approximately same elevation in each lift.

3.5 PAVEMENT AGGREGATE BASE COURSE

A. General: Place base material, in layers of specified thickness, over subgrade surface and geotextile fabric to support pavement. Compact to specified density.

1. Refer to other Division 32 sections for paving specifications.

B. Grade Control: During construction, maintain lines and grades including crown and cross-slope of base course.

C. Shoulders: Place shoulders along edges of base course to prevent lateral movement. Construct shoulders of acceptable soil materials, placed in such quantity to compact to thickness of each base course layer. Compact and roll at least a 12-inch width of shoulder simultaneously with the compaction and rolling of each layer of base course.

D. Compact aggregate base course (where applicable) to indicated density.

3.6 GRADING

A. General: Uniformly grade areas within limits of grading under this section, including adjacent transition areas. Smooth finished surface within specified tolerances, compact with uniform levels or slopes between points where elevations are indicated, or between such points and existing grades.

B. Grading Outside Building Lines: Grade areas adjacent to building lines to drain away from structures and to prevent ponding.

C. Finish surfaces free from irregular surface changes, and as follows:

1. Pavements: Shape surface of areas under pavement to line, grade and cross-section, with finish surface not more than ½" above or below required subgrade elevation.

D. Grading Surface of Fill Under Building Slabs: Grade smooth and even, free of voids, compacted as specified, and to required elevation. Provide final grades within a tolerance of ½" when tested with a 10' straightedge.

E. Compaction: After grading, compact subgrade surfaces to the depth and indicated percentage of maximum or relative density for each area classification.

3.7 FIELD QUALITY CONTROL

A. Quality Control Testing During Construction: Allow testing service to inspect and approve subgrades and fill layers before further construction work is performed.

1. Perform field density tests in accordance with ASTM standards.
2. Verification and approval of each footing subgrade may be based on a visual comparison of each subgrade with related tested strata, when acceptable to Architect/Engineer.

B. Paved Areas and Building Slab Subgrade: Make at least three tests.

3.8 MAINTENANCE

A. Protection of Graded Areas: Protect newly graded areas from traffic and erosion. Keep free of trash and debris.

1. Repair and re-establish grades in settled, eroded, and rutted areas to specified tolerances.

B. Reconditioning Compacted Areas: Where completed compacted areas are disturbed by subsequent construction operations or adverse weather, scarify surface, re-shape, and compact to required density prior to further construction.

C. Settling: Where settling is measurable or observable at excavated areas during general project warranty period, remove surface (pavement, lawn or other finish), add backfill material, compact, and replace surface treatment. Restore appearance, quality, and condition of surface or finish to match adjacent work, and eliminate evidence of restoration to greatest extent possible.

3.9 DISPOSAL OF EXCESS AND WASTE MATERIALS

A. Removal to Designated Areas on Owner's Property: Transport acceptable excess excavated material to designated soil storage areas on Owner's property. Stockpile soil or spread as directed by Architect/Engineer.

B. Transport waste material, including unacceptable excavated material, trash and debris away from Owner's property and legally dispose of as required.

END OF SECTION 31 21 00

Section 32 14 00 – Unit Paving

PART 1 - GENERAL

1.1 RELATED DOCUMENTS

A. Drawings and general provisions of the Contract apply to this Section.

1.2 SUMMARY

A. Section Includes:

1. Brick pavers set in mortar setting beds.
2. Precast concrete truncated dome paver units.set in mortar setting beds.
3. Geotextile fabric underlayment.

B. Related Sections:

1. Division 32 Section for concrete substrate for unit pavers at vehicular areas.

1.3 PROVISIONS

A. General: It is the intention of this Contract that all other masonry paver units, inclusive of all truncated and multi-colored border shall be furnished and installed as part of the requirements of this Contract.

1.4 PRECONSTRUCION TESTING

A. Preconstruction Adhesion and Compatibility Testing: Submit to latex-additive manufacturer, for testing as indicated below, samples of paving materials that will contact or affect mortar and grout that contain latex additives.

1. Use manufacturer's standard test methods to determine whether mortar and grout materials will obtain optimum adhesion with, and will be non-staining to, installed pavers and other materials constituting paver installation.

1.5 ACTION SUBMITTALS

A. Product Data: For materials other than water and aggregates.
B. Product Data: For the following:

1. Pavers.
2. Truncated warning dome pavers
3. Mortar and grout materials.

C. Adhesion and Compatibility Test Reports: From latex-additive manufacturer for mortar and grout containing latex additives.

D. Sieve Analyses: For aggregate setting-bed materials, according to ASTM C 136.
E. Samples for Initial Selection: For the following:

1. Each type of unit paver indicated.
2. Joint materials involving color selection.

F. Samples for Verification:

1. Full-size units of each type of unit paver indicated.
2. Joint materials used to grout between granite school logo and surrounding unit pavers.

1.6 QUALITY ASSURANCE

A. Source Limitations: Obtain each type of unit paver, joint material, and setting material from single source with resources to provide materials and products of consistent quality in appearance and physical properties.
B. Mockups: Build mockups to verify selections made under Sample submittals and to demonstrate aesthetic effects and set quality standards for materials and execution.

1. Mock-up area to be used to determine joint sizes, lines, color(s) and texture of the job. Mock-up area to be the standard from which the work will be judged.
2. Approved mockups may become part of the completed Work if undisturbed at time of Substantial Completion.

C. Qualifications of Manufacturer: Company specializing in manufacture of precast concrete paving units with a minimum of 10 continuous years of documented experience.
D. Qualifications of Subcontractor: Subcontractor shall submit evidence of skill and not less than 5 years of experience in this product type.
E. Precast concrete paving units shall have a compressive strength of 4,000 PSI minimum
F. Pre-installation Conference: Conduct conference at Project site.

1.7 DELIVERY, STORAGE, AND HANDLING

A. Store pavers on elevated platforms in a dry location. If units are not stored in an enclosed location, cover tops and sides of stacks with waterproof sheeting, securely tied.
B. Store cementitious materials on elevated platforms, under cover, and in a dry location. Do not use cementitious materials that have become damp.
C. Store aggregates where grading and other required characteristics can be maintained and contamination avoided.
D. Store liquids in tightly closed containers protected from freezing.

1.8 PROJECT CONDITIONS

A. Cold-Weather Protection: Do not use frozen materials or materials mixed or coated with ice or frost. Do not build on frozen subgrade or setting beds. Remove and replace unit paver work damaged by frost or freezing.
B. Weather Limitations for Mortar and Grout:

1. Cold-Weather Requirements: Comply with cold-weather construction requirements contained in ACI 530.1/ASCE 6/TMS 602.
2. Hot-Weather Requirements: Comply with hot-weather construction requirements contained in ACI 530.1/ASCE 6/TMS 602. Provide artificial shade and windbreaks and use cooled materials as required.

PART 2 - PRODUCTS

2.1 BRICK PAVERS

A. Brick Pavers: Light-traffic paving brick; ASTM C 902, Class SX, Type I, Application PX. Provide brick without frogs or cores in surfaces exposed to view in the completed Work.

1. Basis of Design Manufacturer: Subject to compliance with requirements, provide the following University standard product:

   a. Pine Hall Brick Company, Inc.
      P.O. Box 836
      634 Lindsay Bridge Road
      Madison, North Carolina 27025

2. Thickness: 2-1/4 inches.
3. Face Size: 4 by 8 inches.
4. Colors

   a. Engraved and Non-Engraved Brick Pavers designated as Color #1: Pathway Red.
   b. Border Pavers and Non-Engraved Units designated as Color #2: Cocoa.

B. Efflorescence: Brick shall be rated "not effloresced" when tested according to ASTM C 67.

2.2 CONCRETE TRUNCATED DOME PAVERS

A. Precast concrete paving units shall be precast concrete paver units consisting of portland cement, aggregate, and color admixtures.

1. Portland Cement: ASTM C 150, Type III, high early strength.

   a. Compressive Strength: 4000 psi.

2. Aggregate: ASTM C 33.
3. Color Admixture: By Davis Colors, or equal, as required to achieve color as selected.
4. Portland Cement Mortar that meets or exceeds ANSI A118.4 requirements when mixed with water or a latex admixture, and is designed for installation of large format tile.
5. Grout that meets or exceeds ANSI A118.7 when mixed with water or a latex admixture.

B. Basis of Design Manufacturer: Subject to compliance with requirements, provide the following product. Comparable products of alternative manufacturers may also be acceptable.:

1. Stepstone, Inc.
   a. 17025 South Main Street
   b. Gardena, CA 90248
   c. (310) 327-7474
   d. (800) 572-9029
   e. FAX (310) 217-1424
   f. www.stepstoneinc.com

C. Precast concrete paving unit style:

1. Truncated dome pavers with radius top edges to reduce chipping.
2. Pavers shall have drafted sides.

D. Size: 12” x 12”x 4”

E. Colors and Finishes:

1. Colors: Davis colors (or approved equivalent), integral color admixture. Integral color shall be throughout product. Color shall not be added as a surface cast mix.

a. Note that two colros may be slected for use on this project.

2. Finish: Walking surfaces of precast concrete paving units shall have minimum coefficient of friction of 0.60, wet and dry.

a. Light Sandblasted.

F. Factory Application of Sealer: Factory applies one coat of penetrating sealer to all surfaces of paving units. Sealer shall be non-staining, penetrating material, suitable for exterior or interior use, type which does not discolor or darken the surface.

G. Water Absorption: Not more than 6.0 % average, not more than 7.0 % for any individual unit for standard colors.

H. Truncated Dome Pavers will contain on average 5% entrained air, with no individual piece under 4%.

I. Resistance to Freeze-Thaw: Truncated Dome Pavers will resist 300 freeze thaw cycles in accordance with ASTM C666 Standard Test Method for Resistance of Concrete to Rapid Freezing and Thawing.

J. Fabrication: Truncated Dome Pavers shall be hand-made, wet-cast of cement conforming to ASTM C 150, Type III, aggregates conforming to ASTM C 33, and pigments for integrally colored concrete conforming to ASTM C979.

2.3 CURBS AND EDGE RESTRAINTS

A. Job-Built Edge Restraints: Concrete paving base and curb and edge restraints as detailed in the Drawings and described in Section 32 13 00 “Concrete Paving”.

2.4 ACCESSORIES

A. Compressible Foam Filler: Preformed strips complying with ASTM D 1056, Grade 2A1.

2.5 AGGREGATE SETTING-BED MATERIALS

A. Sand for Leveling Course: Sound, sharp, washed, natural sand or crushed stone complying with gradation requirements in ASTM C 33 for fine aggregate.

B. Sand for Joints: Polymeric joint sand, consisting of manufacturer’s sharp, washed, natural graded sand (ASTM – C144) and specially formulated polymeric epoxy binders specially formulated for the filling of narrow joints when installing pavers.

1. Manufacturers: Subject to compliance with requirements, provide products by one of the following:

a. Techniseal
b. Pavestone

2. Provide manufacturer’s standard pre-packaged products suitable for conditions present at Project site.

C. Water: Potable

D. Separation Geotextile: Non-woven geotextile fabric, manufactured for separation applications; made from polyolefins or polyesters., with elongation less than 50 percent; complying with AASHTO M 288 and the following, measured per test methods referenced:

1. Survivability: Class 2, AASHTO M 288.

E. Herbicide: Commercial chemical for weed control, registered with the EPA. Provide in granular, liquid, or wettable powder form.

2.6 MORTAR SETTING-BED MATERIALS

A. Portland Cement: ASTM C 150, Type I or Type II.
B. Hydrated Lime: ASTM C 207, Type S.
C. Sand: ASTM C 144.
D. Latex Additive: Manufacturer's standard water emulsion, serving as replacement for part or all of gauging water, of type specifically recommended by latex-additive manufacturer for use with field-mixed Portland cement and aggregate mortar bed, and not containing a retarder.
E. Thinset Mortar: Latex-modified Portland cement mortar complying with ANSI A118.4.

1. Manufacturers: Subject to compliance with requirements, provide products by one of the following:

a. Bostik, Inc.
b. C-Cure.
c. Laticrete International, Inc.
d. MAPEI Corporation.
e. Southern Grouts & Mortars, Inc.
f. Summitville Tiles, Inc.

2. Provide prepackaged, dry-mortar mix combined with acrylic resin or styrene-butadiene-rubber liquid-latex additive at Project site.

F. Water: Potable.

2.7 GROUT MATERIALS

A. Polymer-Modified Tile Grout: ANSI A118.7, sanded.

1. Manufacturers: Subject to compliance with requirements, provide products by one of the following:

a. Bostik, Inc.
b. C-Cure.
c. Laticrete International, Inc.
d. MAPEI Corporation.
e. ProSpec.
f. Southern Grouts & Mortars, Inc.
g. Summitville Tiles, Inc.
h. TEC, Specialty Construction Brands, Inc.

2. Polymer Type: Ethylene-vinyl acetate or acrylic additive in dry, redispersible form; prepackaged with other dry ingredients.
3. Polymer Type: Acrylic resin or styrene-butadiene rubber in liquid-latex form for addition to prepackaged dry-grout mix.

B. Grout Colors: As selected by Architect from manufacturer's full range.
C. Water: Potable.

2.8 MORTAR AND GROUT MIXES

A. General: Comply with referenced standards and with manufacturers' written instructions for mix proportions, mixing equipment, mixer speeds, mixing containers, mixing times, and other procedures needed to produce setting-bed and joint materials of uniform quality and with optimum performance characteristics. Discard mortars and grout if they have reached their initial set before being used.
B. Mortar-Bed Bond Coat: Mix neat cement and latex additive to a creamy consistency.
C. Thinset Mortar Bond Coat: Proportion and mix thinset mortar ingredients according to manufacturer's written instructions.

PART 3 - EXECUTION

3.1 EXAMINATION

A. Examine areas indicated to receive paving, with Installer present, for compliance with requirements for installation tolerances and other conditions affecting performance.
B. Verify all dimensions of in-place and subsequent construction
C. Proceed with installation only after unsatisfactory conditions have been corrected.
D. Installation of precast concrete pavers and associated construction constitutes acceptance of the adjacent and underlying construction.

3.2 PREPARATION

A. Remove substances from concrete substrates that could impair bond, including curing and sealing compounds, form oil, and laitance.
B. Sweep concrete substrates to remove dirt, dust, debris, and loose particles.

3.3 INSTALLATION, GENERAL

A. Do not use unit pavers with chips, cracks, voids, discolorations, or other defects that might be visible or cause staining in finished work.
B. Mix pavers from several pallets or cubes, as they are placed, to produce uniform blend of colors and textures.
C. Cut unit pavers with motor-driven masonry saw equipment to provide clean, sharp, unchipped edges. Cut units to provide pattern indicated and to fit adjoining work neatly. Use full units without cutting where possible. Hammer cutting is not acceptable.
D. Handle protective-coated brick pavers to prevent coated surfaces from contacting backs or edges of other units. If, despite these precautions, coating does contact bonding surfaces of brick, remove coating from bonding surfaces before setting brick.
E. Joint Pattern: Stacked and running bond, soldier course, basket weave, and herringbone patterns as indicated on Drawings at respective locations.
F. Tolerances: Do not exceed[1/16-inch unit-to-unit offset from flush (lippage) nor 1/8 inch in 24 inches and 1/4 inch in 10 feet from level, or indicated slope, for finished surface of paving.
G. Expansion and Control Joints: Provide cork joint filler at locations and of widths indicated. Install joint filler before setting pavers. Make top of joint filler flush with top of pavers.
H. Provide edge restraints as indicated. Install edge restraints before placing unit pavers.

    1. Install job-built concrete edge restraints to comply with requirements in Section 321300 "Concrete Paving"

3.4 AGGREGATE SETTING-BED APPLICATIONS

A. Place separation geotextile over concrete base, overlapping ends and edges at least 12 inches..
B. Place leveling course and screed to a thickness of 1 to 1-1/2 inches, taking care that moisture content remains constant and density is loose and uniform until paver are set and compacted.
C. Treat leveling course with herbicide to inhibit growth of grass and weeds.
D. Set pavers with a minimum joint width of 1/16 inch and a maximum of 1/8 inch, being careful not to disturb leveling base. If pavers have spacer bars, place pavers hand tight against spacer bar. Use string line to keep straight lines. Do not allow gaps greater than 3/8 inch between concrete edge restraints and full sized paver units.
E. Vibrate pavers into leveling course with a low-amplitude vibrator capable of 3500- to 5000- lbf compaction force at 80 to 90 Hz. Use vibrator with neoprene mat on face of plate or other means as needed to prevent cracking and chipping of pavers. Perform at least three passes across paving with vibrator.

    1. Complete compaction operation for a full area of bike parking location leaving no unfinished areas at end of day's work.

F. Spread dry sand and fill joints immediately after vibrating pavers into leveling course. Vibrate pavers and add san until joints are completely filled, then remove excess sand. Leave a slight surplus of sand on the surface for joint filling.
G. Do not allow traffic on installed paving until sand has been vibrated into joints.
H. Repeat joint filling process 15 days later.

3.5 MORTAR SETTING-BED APPLICATIONS (Street Intersection)

A. Saturate concrete subbase with clean water several hours before placing setting bed. Remove surface water about one hour before placing setting bed.
B. Apply mortar-bed bond coat over surface of concrete subbase about 15 minutes before placing mortar bed. Limit area of bond coat to avoid its drying out before placing setting bed. Do not exceed 1/16-inch thickness for bond coat.
C. Apply mortar bed over bond coat; spread and screed mortar bed to uniform thickness at subgrade elevations required for accurate setting of pavers to finished grades indicated.
D. Mix and place only that amount of mortar bed that can be covered with pavers before initial set. Before placing pavers, cut back, bevel edge, and remove and discard setting-bed material that has reached initial set.
E. Wet brick pavers before laying if the initial rate of absorption exceeds 30 g/30 sq. in. per minute when tested according to ASTM C 67. Allow units to absorb water so they are damp but not wet at time of laying.
F. Place pavers before initial set of cement occurs. Immediately before placing pavers on mortar bed, apply uniform 1/16-inch- thick bond coat to mortar bed or to back of each paver with a flat trowel.
G. Tamp or beat pavers with a wooden block or rubber mallet to obtain full contact with setting bed and to bring finished surfaces within indicated tolerances. Set each paver in a single operation before initial set of mortar; do not return to areas already set or disturb pavers for purposes of realigning finished surfaces or adjusting joints.
H. Set pavers with a minimum joint width of 1/16 inch and a maximum of 1/8 inch, being careful not to disturb leveling base. If pavers have spacer bars, place pavers hand tight against spacer bar. Use string line to keep straight lines. Do not allow gaps greater than 3/8 inch between concrete edge restraints and full sized paver units.
I. Grouted Joints: Joints between paver units are to be dusted as per units set in sand aggregate setting beds. Grout only between Granite University Logo and surrounding paver units.

J. Grout joints (spacing between granite logo and pavers) as soon as possible after initial set of setting bed.

1. Force grout into joints, taking care not to smear grout on adjoining surfaces.
2. Clean pavers as grouting progresses by dry brushing or rubbing with dry burlap to remove smears before tooling joints.
3. Tool exposed joints slightly concave when thumbprint hard, using a jointer larger than joint thickness unless otherwise indicated.
4. If tooling squeezes grout from joints, remove excess grout and smears by dry brushing or rubbing with dry burlap and tool joints again to produce a uniform appearance.

K. Cure grout by maintaining in a damp condition for seven days unless otherwise recommended by grout or liquid-latex manufacturer.

3.6 INSTALLATION OF CONCRETE TRUNCATED DOME PAVERS - GENERAL

A. Installation shall comply with requirements of applicable building codes and state and local jurisdictions.
B. Install Truncated Dome Pavers in a mortar bed in accordance with the specifications defined in the CTMA Handbook for Concrete Tiles, available at http://www.stepstoneinc.com/docs/ctma_handbook.pdf. Maintain straight pattern lines.
C. 100% paver bonding coverage is recommended, with a minimum acceptable coverage of 95% for exterior installations. Backbuttering is mandatory to obtain a minimum of 95% coverage.
D. Clean any mortar off the face of the pavers immediately. Do not leave a 'cement haze' on the concrete paver's surface.
E. Provide for expansion and control joints as specified per TCA detail EJ-171-current year. Follow expansion and control joint materials manufacturer's instructions.
F. Typical joints between mortar-set Truncated Dome Pavers are from 3/16" to 1/4" wide.
G. Place grout between Truncated Dome Pavers in accordance with the specifications defined in the CTMA Handbook for Concrete Tiles, available at http://www.stepstoneinc.com/docs/ctma_handbook.pdf
H. Follow grout manufacturer's directions for use of grout. Grout shall fill joint completely.
I. Truncated Dome Pavers are concrete and the cementitious material in grout will permanently bond to the pavers. Clean any grout off the face of the pavers immediately. Never leave a 'cement haze' on the concrete paver's surface.

3.7 REPAIRING, POINTING, AND CLEANING

A. Remove and replace unit pavers that are loose, chipped, broken, stained, or otherwise damaged or that do not match adjoining units. Provide new units to match adjoining units and install in same manner as original units, with same joint treatment and with no evidence of replacement.
B. Pointing: During tooling of joints, enlarge voids or holes and completely fill with grout. Point joints at sealant joints to provide a neat, uniform appearance, properly prepared for sealant application.
C. Cleaning: Remove excess grout from exposed paver surfaces; wash and scrub clean.

1. Remove temporary protective coating as recommended by coating manufacturer and as acceptable to paver and grout manufacturers.
2. Do not allow protective coating to enter floor drains. Trap, collect, and remove coating material.

END OF SECTION 32 14 00

Section 32 27 70 – Rigid Pavement for Civil Sections

Drawings and general provisions of the Contract, including General and Supplementary Conditions and Division 1 Specification Sections, apply to this Section.

RIGID PAVEMENT SPECIFICATIONS

Rigid Pavement Technical Specifications shall be as per the 2012 Edition of the LCG Department of Public Works "Standard Specifications for Roads, Drainage, Bridges, and Other Infrastructure Improvements", Revised August, 11, 2015 or latest version. The Technical Specifications are not attached to this set, but shall be considered inclusive of the Construction Documents. The main sections for this project for rigid pavement shall include but not limited to Part VI "Rigid Pavement" , Part IX "Portland Cement Concrete", Part X "Materials" and related sections. A copy can be viewed at the office of Ronkartz-Oestriecher, APEC at 1919B Dulles Drive, Lafayette, LA 70506 or can be obtained from Lafayette Consolidated Government Department of Public Works at 1515 E University Avenue, Lafayette Louisiana 70502. A .pdf version of the "Standard Specifications for Roads, Drainage, Bridges, and Other Infrastructure Improvements" can be provided upon request. All pavement and base recommendations shall be per the geotechnical report for this specific project.

Pay items listed it the "Standard Specifications for Roads, Drainage, Bridges, and Other Infrastructure Improvements" shall NOT be valid for this project. Compensation shall be made as per the Bid Form included in this document. If any contradictions between the two arise, the Bid Form in this document shall govern. If an item of work is called for in the Plans and is not specifically itemized in the Bid Form, that work shall be considered incidental to the cost of the project. No additional payment will be made.

END OF SECTION 32 27 70

Section 32 30 50 – Incidental Construction

Drawings and general provisions of the Contract, including General and Supplementary Conditions and Division 1 Specification Sections, apply to this Section.

INCIDENTAL CONSTRUCTION SPECIFICATIONS

Incidental Construction Technical Specifications shall be as per the 2012 Edition of the LCG Department of Public Works "Standard Specifications for Roads, Drainage, Bridges, and Other Infrastructure Improvements", Revised August 11, 2015 or latest version. The Technical Specifications are not attached to this set, but shall be considered inclusive of the Construction Documents. The main sections for this project for Incidental Construction items such as; fences, walks, drives, curbs and gutters, flowable fill, rip rap, revetments, temporary traffic control, topsoil, erosion control systems, bedding, painted traffic striping, etc. shall include but not limited to Part VII "Incidental Construction", Part X "Materials" and their related sections. A copy can be viewed at the office of Ronkartz-Oestriecher, APEC at 1919B Dulles Drive, Lafayette, LA 70506 or can be obtained from Lafayette Consolidated Government Department of Public Works at 1515 E University Avenue, Lafayette Louisiana 70502. A .pdf version of the "Standard Specifications for Roads, Drainage, Bridges, and Other Infrastructure Improvements" can be provided upon request. Fill and compaction recommendations shall be per the geotechnical report for this specific project.

Pay items listed it the "Standard Specifications for Roads, Drainage, Bridges, and Other Infrastructure Improvements" shall NOT be valid for this project. Compensation shall be made as per the Bid Form included in this document. If any contradictions between the two arise, the Bid Form in this document shall govern. If an item of work is called for in the Plans and is not specifically itemized in the Bid Form, that work shall be considered incidental to the cost of the project. No additional payment will be made.

END OF SECTION 32 30 50

Section 33 00 00 – Water and Sewer

Drawings and general provisions of the Contract, including General and Supplementary Conditions and Division 1 Specification Sections, apply to this Section.

WATER AND SEWER SPECIFICATIONS

Water and Sewer Technical Specifications shall be as per the latest Lafayette Utilities Systems Standard Specifications, which can also be found in the 2012 Edition of the LCG Department of Public Works "Standard Specifications for Roads, Drainage, Bridges, and Other Infrastructure Improvements", Revised August 11, 2015 or latest version. The Technical Specifications are not attached to this set, but shall be considered inclusive of the Construction Documents. The main sections for this project for water and sewer shall include but not limited to Section 741-A "Water Distribution System", 741-B "Fire Hydrants, Services and Valves", Section 742-A "Wastewater Collection System" and Section 742-B "Wastewater Force Mains" and their related sections. A copy can be viewed at the office of Ronkartz-Oestriecher, APEC at 1919B Dulles Drive, Lafayette, LA 70506 or can be obtained from Lafayette Consolidated Government Department of Public Works at 1515 E University Avenue, Lafayette Louisiana 70502. A .pdf version of the "Standard Specifications for Roads, Drainage, Bridges, and Other Infrastructure Improvements" can be provided upon request.

Pay items listed it the "Standard Specifications for Roads, Drainage, Bridges, and Other Infrastructure Improvements" shall NOT be valid for this project. Compensation shall be made as per the Bid Form included in this document. If any contradictions between the two arise, the Bid Form in this document shall govern. If an item of work is called for in the Plans and is not specifically itemized in the Bid Form, that work shall be considered incidental to the cost of the project. No additional payment will be made.

END OF SECTION 33 00 00

Section 33 27 20 – Culverts and Storm Drains

Drawings and general provisions of the Contract, including General and Supplementary Conditions and Division 1 Specification Sections, apply to this Section.

CULVERTS AND STORM DRAINS SPECIFICATIONS

Culvert and Storm Drains Technical Specifications shall be as per the 2012 Edition of the LCG Department of Public Works "Standard Specifications for Roads, Drainage, Bridges, and Other Infrastructure Improvements", Revised August 11, 2015 or latest version. The Technical Specifications are not attached to this set, but shall be considered inclusive of the Construction Documents. <u>The main sections for this project for culverts and storm drains shall include but not limited to Part VII "Incidental Construction", Section 701 "Culverts and Storm Drains", Section 702 "Manholes, Junction Boxes, Catch Basins and End Treatments", Part X "Materials" and their related sections.</u> A copy can be viewed at the office of Ronkartz-Oestriecher, APEC at 1919B Dulles Drive, Lafayette, LA 70506 or can be obtained from Lafayette Consolidated Government Department of Public Works at 1515 E University Avenue, Lafayette Louisiana 70502. A .pdf version of the "Standard Specifications for Roads, Drainage, Bridges, and Other Infrastructure Improvements" can be provided upon request. All bedding and backfill recommendations shall be per the geotechnical report for this specific project.

Pay items listed it the "Standard Specifications for Roads, Drainage, Bridges, and Other Infrastructure Improvements" shall NOT be valid for this project. Compensation shall be made as per the Bid Form included in this document. If any contradictions between the two arise, the Bid Form in this document shall govern. If an item of work is called for in the Plans and is not specifically itemized in the Bid Form, that work shall be considered incidental to the cost of the project. No additional payment will be made.

END OF SECTION 33 27 20