Attachment J

BRADEN

MODEL HU8A

HYDRAULIC LOW-MOUNT WORM GEAR WINCH

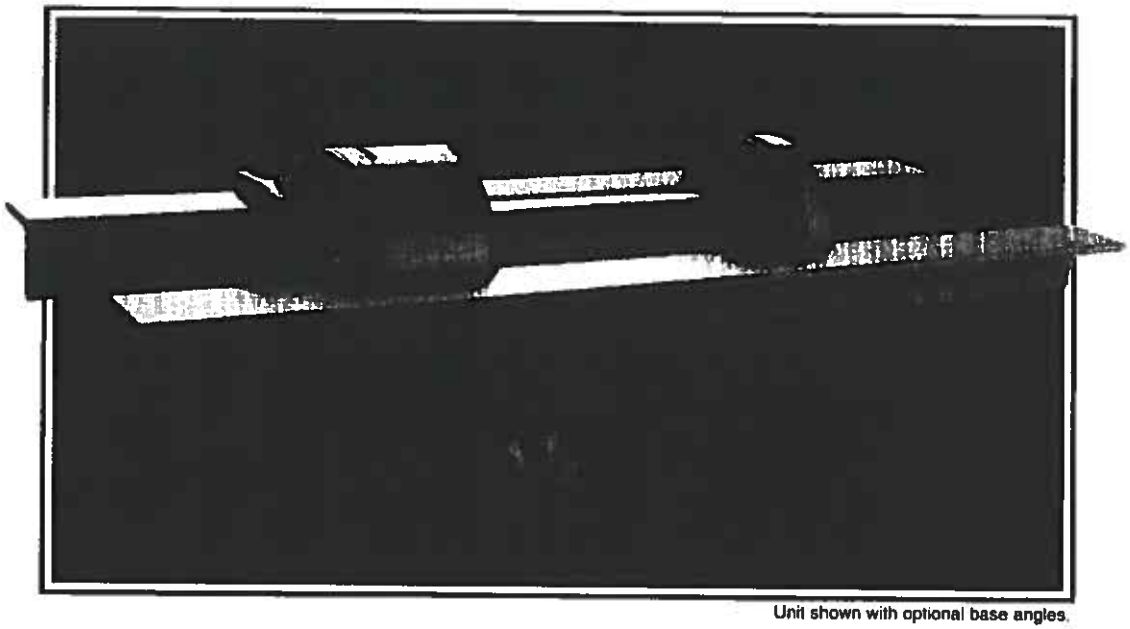

Unit shown with optional base angles.

8,000 LBS FIRST LAYER LINE PULL

- 6 in. or 11 in. Drum Length
- Optional Base Angles
- Available With or Without Hydraulic Motor
- Drum Clutch Operates in Oil Lubricated, Sealed Worm Gear Housing
- Internal Drag Brake Reduces Back Spinning When Drum is Disengaged
- Compact, Heavy Duty Construction
- Self-locking Worm and Gear Set
- Socket and Wedge Type Cable Anchor

BRADEN HU8A DIMENSIONAL INFORMATION

DIMENSIONS SHOWN ARE INCHES (mm)

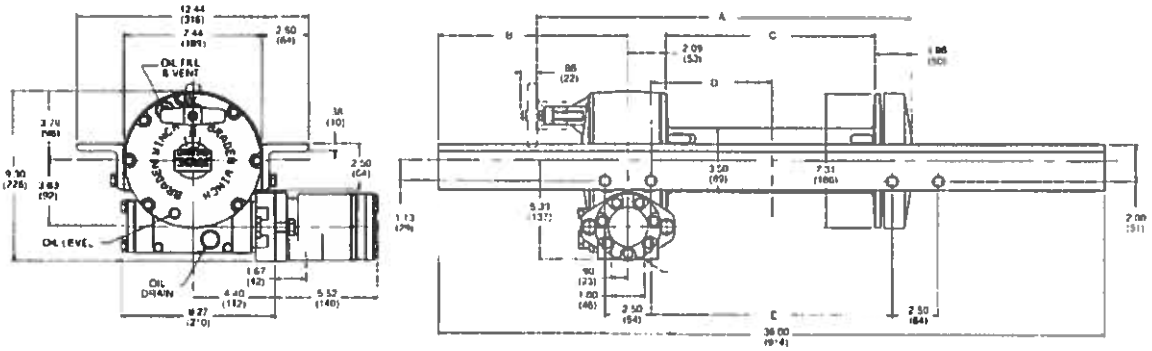

MOTOR PORTS ARE 1/2-14NPTF
SAE 2 BOLT "A" MOUNTING FLANGE
1 IN. KEYED SHAFT

	A	B	C	D	E
6 IN. DRUM	15.31	12.72	6.32	4.0	8.06
	(389)	(323)	(161)	(102)	(205)
11 IN. DRUM	20.31	10.22	11.32	6.5	13.06
	(516)	(260)	(288)	(165)	(332)

ENGINEERING DATA

Rated Working Load (Max. Load, First Layer)	8,000 lbs	35.6 kN
Breaking Strength (First Layer)	16,000 lbs	71.2 kN
Worm Gear Ratio	45:1	
Drum Shaft Diameter	1 1/2 in.	38.1 mm
Maximum input RPM at Rated Load	650	
Starting Input Torque (Static)	1,150 lb-in.	130 Nm
Operating input Torque (Dynamic)	900 lb-in.	102 Nm
Weight (Winch, less motor and base angles)	48 lbs	22 kg
Add for hydraulic motor	15 lbs	6.8 kg
Add for base angles	33 lbs	15 kg
Add for 11 inch drum	5 lbs	2.3 kg
Oil Capacity	0.5 pints	0.24 L
Motor - Char-Lynn H Series	5.9 CU IN.	

WARNING ⚠

The winches described herein are neither designed nor intended for use or application to equipment used in the lifting or moving of persons. Worm gear winch cable anchors (u bolts, set screws, wedges, etc.) are NOT designed to hold rated loads. Winch loads applied directly to the cable anchor may cause the cable to pull free and result in the sudden loss of load control and cause property damage, severe personal injury or death. A minimum of 5 wraps of cable must be left on the drum barrel to achieve rated load. Refer to worm gear winch - installation operation and preventive maintenance manual (PB-162) for additional information.

HU8A PERFORMANCE

LAYER	3/8 in. WIRE ROPE				7/16 in. WIRE ROPE			
	LINE PULL lbs (kN)	LINE SPEED FPM (MPM)	6 in. DRUM CAPACITY* ft (M)	11 in. DRUM CAPACITY* ft (M)	LINE PULL lbs (kN)	LINE SPEED FPM (MPM)	6 in. DRUM CAPACITY* ft (M)	11 in. DRUM CAPACITY* ft (M)
1	8,000 (35.6)	12 (3.6)	15 (4.6)	28 (8.5)	8,000 (35.6)	12 (3.7)	13 (4.0)	24 (7.3)
2	6,700 (29.8)	14 (4.3)	34 (10.4)	60 (18.3)	6,545 (29.1)	15 (4.5)	30 (9.1)	53 (16.2)
3	5,765 (25.6)	17 (5.8)	55 (16.8)	99 (30.2)	5,540 (24.5)	18 (5.3)	49 (14.9)	88 (26.8)
4	5,060 (22.5)	19 (5.8)	79 (24.1)	142 (43.3)	4,800 (21.4)	20 (6.2)	71 (21.6)	128 (39.0)
5	4,510 (20.1)	21 (6.5)	107 (32.6)	191 (58.2)				

Performance above is at 2,000 PSI and 15 GPM

*90% of theoretical

SPECIFICATIONS ARE SUBJECT TO CHANGE WITHOUT NOTICE AND WITHOUT INCURRING OBLIGATION.