Bid Number 50 - 00118051

Two (2) year contract for Labor and Equipment to maintain Dredge Intake Basin at the Eastbank Wastewater Treatment Plant, for the Jefferson Parish Department of Water

BID DUE: November 15, 2016 at 2:00 PM

ATTENTION VENDORS!!!

Please review all pages and respond accordingly, complying with all provisions in the technical specifications and Jefferson Parish Instructions for Bidders and General Terms and Conditions. All bids must be received in the Purchasing Department by the bid due date and time.

Jefferson Parish Purchasing Department
200 Derbigny Street
General Government Building, Suite 4400
Gretna, LA 70053
Buyer Name: Ms. Sidney Duffy, Buyer II
Buyer Email: sduffy@jeffparish.net
Buyer Phone: 504.364.2682

JEFFERSON PARISH

Department of Purchasing

Michael S. Yenni
Parish President

Brenda J. Campos
Director

CHANGES TO JEFFERSON PARISH BIDDING PROCEDURES

Bidders should carefully read and must respond accordingly per the requirements of the bid packages. Bidders should reference the "Additional Requirements" section of the bid instructions and/or the "Important Notice to Bidders" included in the bid package for specific requirements to respond accordingly.

Effective August 1, 2016, please be advised:

- Affidavits (Non-Public Works Affidavit or Public Works Affidavit) – as you are aware, bidders are required to submit affidavits pursuant to LA public bid law and Jefferson Parish Code of Ordinances. Bidders must read each bid package to ensure compliance. Effective August 1st, ***affidavits are required with bid submission***. While copies are acceptable to include with bid submission, original affidavits are required upon contract execution. Original affidavits are encouraged with bid submission.
- Current W9 Forms and vendor applications may be submitted at any time; however, if your company is not registered and/or a current W-9 form is not on file, a current W-9 form must be supplied upon contract execution, should you be awarded a contract and/or issued a purchase order.
- Upon contract execution, successful bidder must continue producing final insurance certificates per standard Jefferson Parish insurance requirements. Proof of insurance is required for bidding purposes. Bidders must read the insurance requirements attachment included in each bid package for specific instructions.

These changes are pursuant Louisiana Public Bid Law more specifically, Act 406 of the 2016 Louisiana Legislative Regular Session. For the purposes of this communication, this change applies to Jefferson Parish Government bid solicitations only. For more information, please call Jefferson Parish Purchasing at 504-364-2678.

General Government Bldg. – 200 Derbigny St – Suite 4400 - Gretna, LA 70053
Office 504.364.2678 – Fax 504.364.2693
Email: Purchasing@jeffparish.net Website: www.jeffparish.net

Maintenance Dredging Contract
Jefferson Parish East Bank Water Treatment Plant Intake Basin

Contractor will furnish all required labor and equipment to perform maintenance dredging of intake basin at Jefferson Parish East Bank Water Treatment Plant on as-needed basis. Contract term will be for two (2) years.

Project site is located approximately 0.68 miles down river from Huey P. Long Bridge, near eastern shoreline of Mississippi River in Jefferson, Louisiana. Additional site location information is provided below.

Section 44, Township 13 South, Range 10 East
Latitude 29 Degrees, 57 Minutes, 12 Seconds
Longitude 90 Degrees, 09 Minutes, 46 Seconds

Reference enclosed Vicinity and Location Maps.

Jefferson Parish Water Department will obtain authorization from U.S. Army Corps of Engineers New Orleans District, Louisiana Department of Natural Resources Coastal Management Division, Louisiana Coastal Protection and Restoration Authority, and East Jefferson Levee District prior to directing contractor to perform dredge work.

Contractor will excavate approximately 16,520 cubic yards (per dredge) of native material (clay, mud, and soil) from approximately 0.6 acres of non-vegetated water bottoms to elevation -10 feet using barge-mounted hydraulic dredge. Contractor will be responsible for any/all damages incurred on Parish Property.

Dredged material will be disposed of in Mississippi River beyond -55 foot contour.

All elevations refer to N.A.V.D. (North American Vertical Datum) 88 Datum.

Reference enclosed Plan View and Hydrological Survey.

NOTE: Continued, unhampered operation of water treatment plant is of paramount importance. Contractor will coordinate all dredging

operations with chief superintendent of water plant to ensure operation of facility is not adversely impacted.

Contractor will complete all work within 30 days of receiving formal notice to proceed from Director of Jefferson Parish Water Department. Liquidated damages of $200 per day will be assessed for each and every calendar day after time specified for completion until work is complete in accordance with contract documents.

Performance bond in amount equaling 50% of contract price will be supplied by contractor at contract signing.

Contractor will possess current Louisiana State Contractor's License in Specialty: **Dredging and/or Heavy Construction**.

A MANDATORY Pre-Bid Conference will be held at 10:00 am on November 14, 2016 in the Jefferson Parish Purchasing Department located at 200 Derbigny Street, Suite 4400, Gretna, LA 70053, All bidders must attend the Mandatory pre-bid conference and will be required to sign in and out as evidence of attendance. In accordance with LSA R.S. 38:2212(I), all prospective bidders shall be present at the beginning of the Mandatory pre-bid conference and shall remain in attendance for the duration of the conference. Any prospective bidder who fails to attend the conference or remain for the duration shall be prohibited from submitting a bid for the project.

Survey is in pdf form, and available upon request.

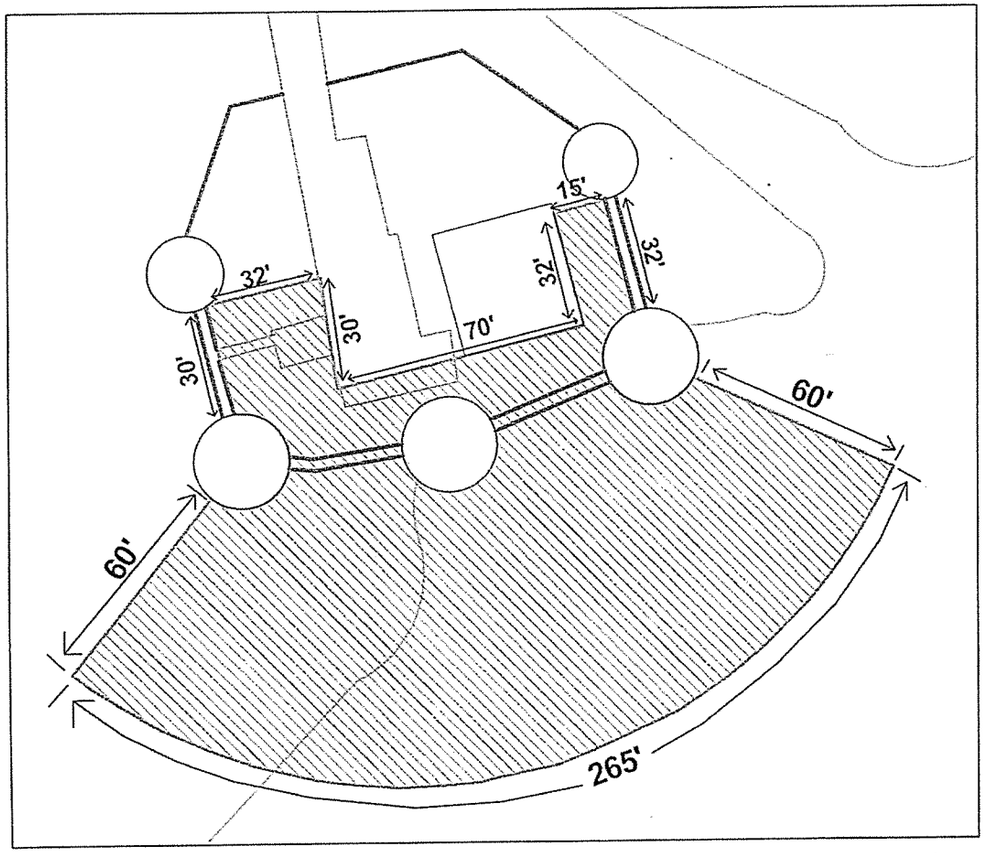

Plan View

Jefferson Parish Department of Water
East Bank Water Intake

Legend

- SHEET PILE WALL
- BUILDING
- CAISSON
- ROADWAY
- DREDGE AREA
- SHORELINE

The information shown on this drawing was prepared for Jefferson Parish using aerial photography and field investigations.
The Parish makes no warranty as to its accuracy. The user assumes all responsibilities for verifying the accuracy of any feature or dimension which may be critical to the intended use of this data.

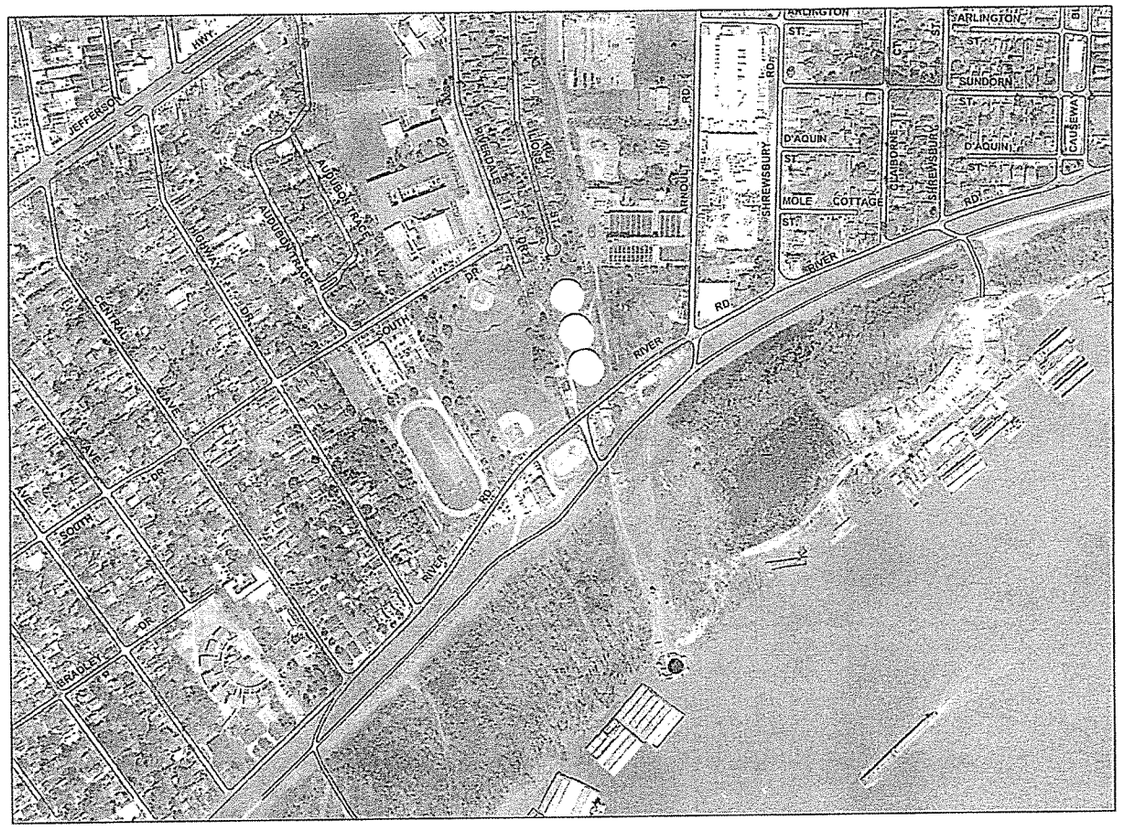

NORTH

Location Map

Legend

East Bank Water Intak

STREETS.CURBS

The information shown on this drawing was prepared for Jefferson Parish using aerial photography and field investigations.
The Parish makes no warranty as to its accuracy. The user assumes all responsibilit for verifying the accuracy of any feature or dimension which may be critical to the intend use of this data.

Jefferson Parish Department of Water

East Bank Water Intake

Lat: 29° 57' 12"

Long: 90° 9' 46"

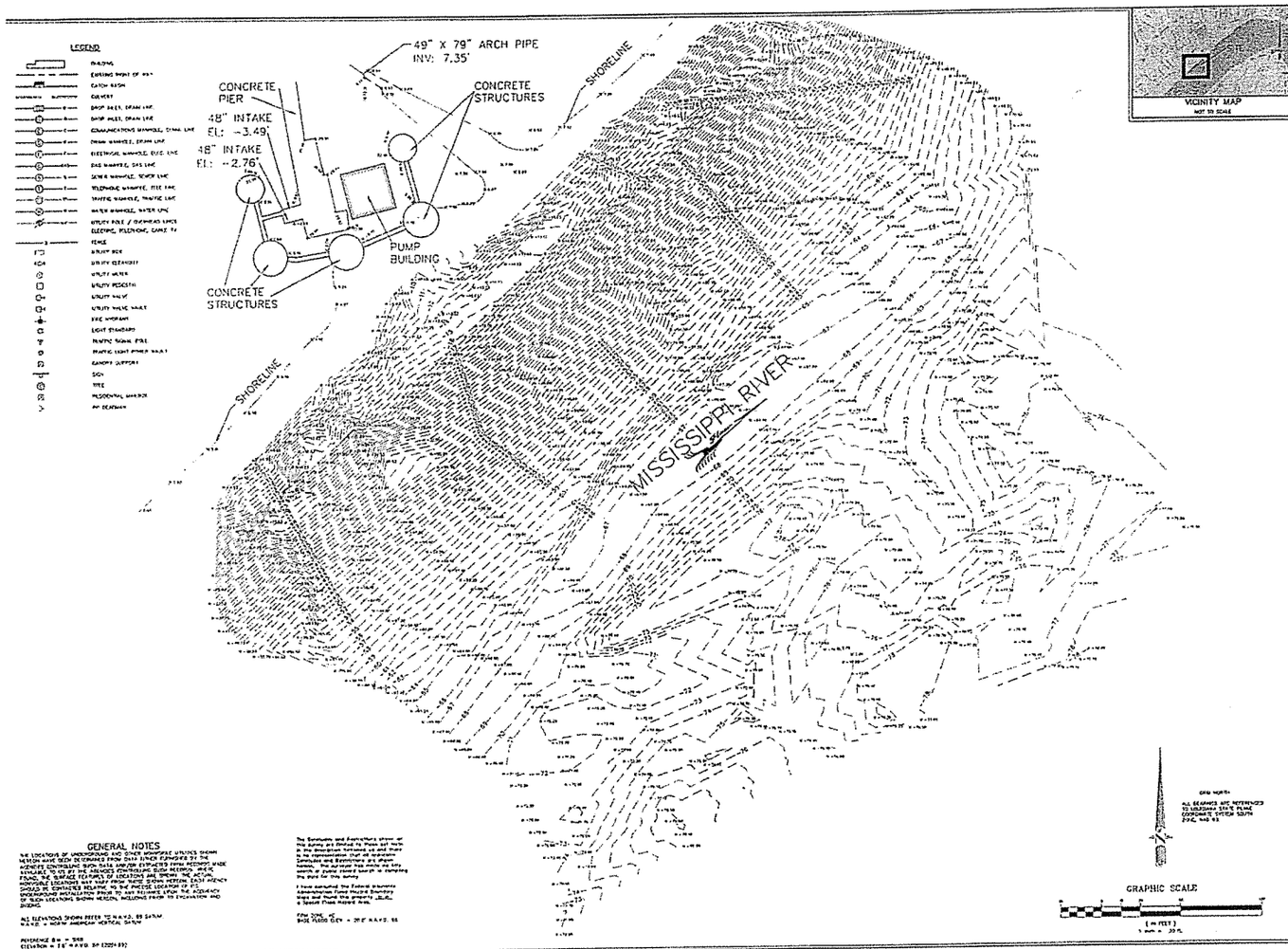

GENERAL NOTES

THE LOCATIONS OF UNDERGROUND AND OTHER INVISIBLE UTILITIES SHOWN HEREON WERE DETERMINED FROM DATA FURNISHED BY THE RESPECTIVE UTILITY OWNERS. SUCH DATA WHICH EXTENDED OVER PERIODS WIDE APART IN TIME, OR IN AREAS CONTAINING SUCH RECORDS, WERE FOUND, THE SURFACE LOCATIONS OF LOCATIONS ARE SHOWN. THE ACTUAL UNDERGROUND LOCATIONS MAY VARY FROM THOSE SHOWN HEREON. EACH AGENCY SHOULD BE CONTACTED REGARDING ANY DETAILED DATA. THE ACTUAL UNDERGROUND INSTALLATION MAY ALSO VARY FROM RECORDS UPON THE ACCURACY OF SUCH LOCATIONS SHOWN HEREON, FOLLOWING PRIOR TO EXCAVATION AND DIGGING.

ALL ELEVATIONS SHOWN REFER TO N.A.V.D. 88 DATUM
N.A.V.D. = NORTH AMERICAN VERTICAL DATUM

REFERENCE B.M. = [illegible]
ELEVATION = [illegible] N.A.V.D. 88 ([illegible])

This Boundary and Topographic survey of this survey are limited to those set forth in the description furnished us and shall be representation that all encumbrances, easements and restrictions affecting the property are shown hereon, nor do any search or public record search or examining the title for this survey.

I have consulted the Federal Emergency Administration Flood Insurance Boundary Maps and found the property [illegible] a Special Flood Hazard Area.

FIRM ZONE: [illegible]
BASE FLOOD ELEV. = [illegible] N.A.V.D. 88

GRID NORTH
ALL BEARINGS ARE REFERENCED TO LOUISIANA STATE PLANE COORDINATE SYSTEM SOUTH ZONE, NAD 83

(IN FEET)
1 inch = 20 ft.

BGM CORPORATION, L.L.C.
Professional Land Surveyors
[illegible]

HYDROLOGICAL SURVEY OF
EAST BANK WATER TREATMENT PLANT
INTAKE BASIN
JEFFERSON PARISH, LOUISIANA

SCALE: 1" = 20'
DATE: SEPTEMBER 17, 2010
DRAWN BY: J.N.S.
CHECKED BY: K.A.B.
PROJECT NO. 7258
DRAWING NO. 7258
SHEET 1 OF 1

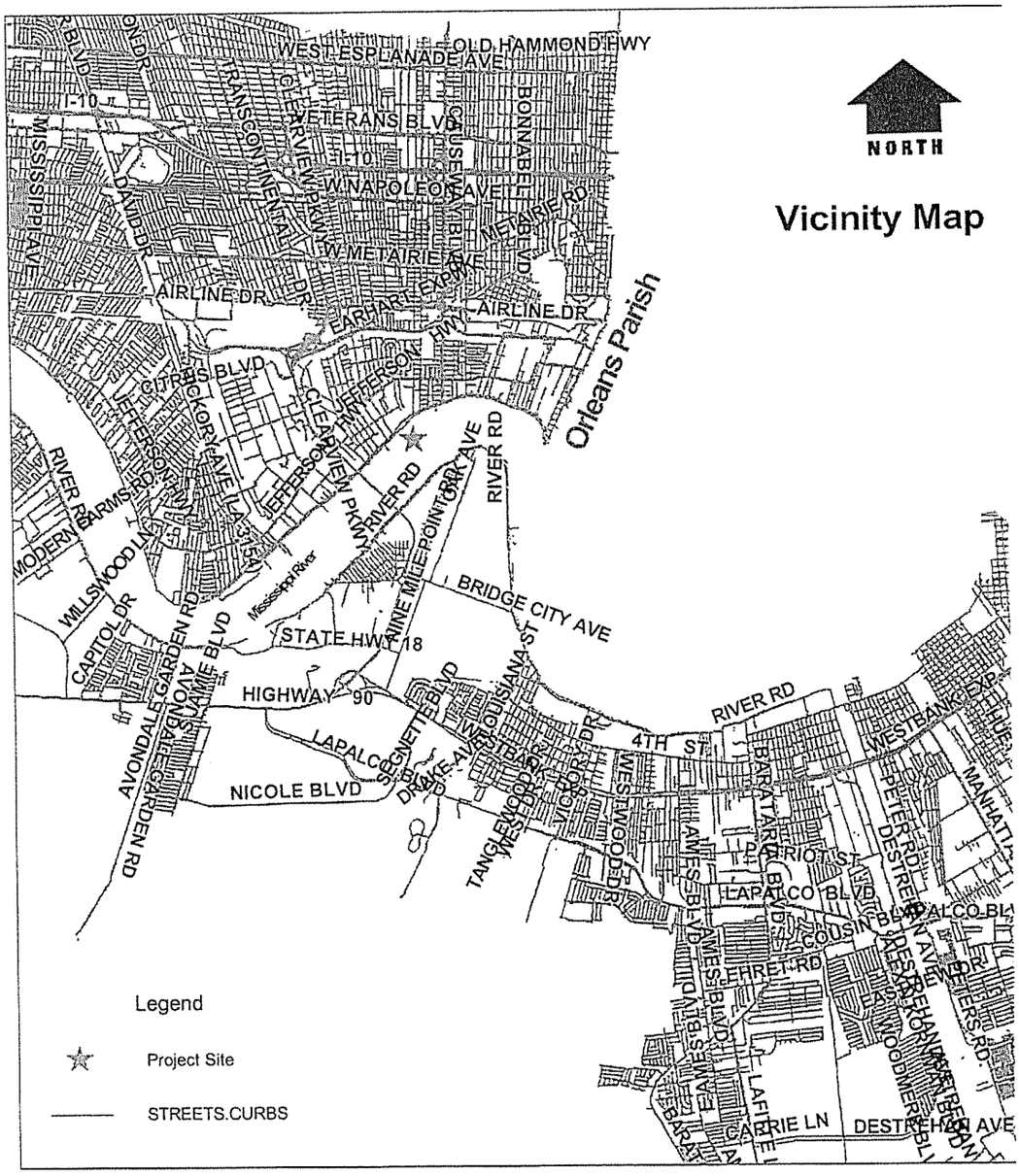
NORTH
Vicinity Map
Orleans Parish
OLD HAMMOND HWY
WEST ESPLANADE AVE
VETERANS BLVD
W NAPOLEON AVE
W METAIRIE AVE
METAIRIE RD
AIRLINE DR
EARHART EXPWY
CITRUS BLVD
JEFFERSON HWY
RIVER RD
BRIDGE CITY AVE
STATE HWY 18
HIGHWAY 90
NICOLE BLVD
LAPALCO BLVD
4TH ST
PATRIOT ST
COUSIN BLVD
EHRET RD
CARRIE LN
DESTREHAN AVE
WESTBANK EXP
Legend
Project Site
STREETS.CURBS

INVITATION TO BID FROM JEFFERSON PARISH - continued

BID NO.: 50-00118051

SEALED BID

ITEM NUMBER	QUANTITY	U/M	DESCRIPTION OF ARTICLES	UNIT PRICE QUOTED	TOTALS
			TWO (2) YEAR CONTRACT FOR LABOR AND EQUIPMENT TO MAINTAIN DREDGE INTAKE BASIN AT THE EAST BANK WASTEWATER TREATMENT PLANT, FOR THE JEFFERSON PARISH DEPARTMENT OF WATER		
1	1.00	JOB	0010 - DREDGING-MOBILIZATION/ DEMOBILIZATION COST PER JOB		
			DREDGING--LABOR AND EQUIPMENT TO MAINTENANCE DREDGE INTAKE BASIN AT EAST BANK WATER TREATMENT PLANT NOTE: THIS CONTRACT WILL BE USED ONLY WHEN NEEDED FOR THE MAINTENANCE DREDGING OF THE INTAKE BASIN AT THE EAST BANK WATER TREATMENT PLANT TO REMOVE SILT ACCUMULATIONS.		
2	2.00	JOB	0020 - DREDGING (COST BASED ON REMOVAL OF APPROXIMATELY 16,520 CUBIC YARDS OF MATERIAL PER DREDGE)		

DATE: 10/18/2016

BID NO.: 50-00118051

INVITATION TO BID
THIS IS NOT AN ORDER

JEFFERSON PARISH

PURCHASING DEPARTMENT
P.O. BOX 9
GRETNA, LA. 70054-0009
504-364-2678

BUYER: SDUFFY@jeffparish.net

BIDS WILL BE RECEIVED IN THE PURCHASING DEPARTMENT, SUITE 4400, JEFFERSON PARISH GENERAL GOVERNMENT BUILDING, 200 DERBIGNY STREET, GRETNA, LA 70053 UNTIL 2:00 PM, 11/15/2016 AND PUBLICLY OPENED THEREAFTER.

LATE BIDS WILL NOT BE ACCEPTED

Unless submitting via online (see Page 3), each bid must be submitted in a sealed envelope bearing on the outside; the name of the Bidder, his address, and the name of the project for which the bid is submitted and the bid number.

NOTE: ONLY BIDS WRITTEN IN INK OR TYPEWRITTEN, AND PROPERLY SIGNED BY A MEMBER OF THE FIRM OR AUTHORIZED REPRESENTATIVE, WILL BE ACCEPTED. PENCIL AND/OR PHOTOSTATIC FIGURES OR SIGNATURES SHALL RESULT IN BID REJECTION.

INSTRUCTIONS FOR BIDDERS AND GENERAL CONDITIONS

THE FOLLOWING INSTRUCTIONS APPLY TO ALL BIDS

All bids submitted are subject to these instructions and general conditions and any special conditions and specifications contained herein, all of which are made part of this bid proposal reference. By submitting a bid, vendor agrees to comply with all provisions of Louisiana Law as well be in compliance with the Jefferson Parish Code of Ordinances, Louisiana Code of Ethics, applicable Jefferson Parish ethical standards and Jefferson Parish Resolution No. 113646 and/or Resolution No. 113647.

All vendors submitting bids should register as a Jefferson Parish vendor if not already yet registered. Registration forms may be downloaded from www.purchasing.jeffparish.net and by clicking on Vendor Information. While Jefferson Parish may have these on file, all bidders should furnish their current W-9 Form and respective Tax Identification Numbers with bid submission; records on file may be invalid or expired. The successful bidder must submit a W-9 Form and respective Tax Identification Number upon contract execution. Failure to do so may result in delay of payment.

All quotations shall be based on F.O.B. Agency warehouse or job site, anywhere within the Parish as designated by the Purchasing Department. This provision does not apply to public works projects

JEFFERSON PARISH requires all products to be new (current) and all work must be performed according to standard practices for the project. Unless otherwise specified, no aftermarket parts will be accepted. Unless otherwise specified, all workmanship and materials must have at least one (1) year guaranty, in writing, from the date of delivery and/or acceptance of the project. Any deviations or alterations from the specifications must be indicated and/or supporting documentation supplied with bid submission.

Bidders should submit all questions in writing and fax them to the Purchasing Department at (504) 364-2693 no later than FIVE (5) working days prior to bid opening. Bid numbers should be mentioned in all requests. Questions may also be emailed to the buyer for this bid at the email address listed above. If submitting online, vendors may send questions via the E-Procurement site no later than Five (5) working days prior to the bid opening.

If this bid requires a pre-bid conference (see Additional Requirements section), bidders are advised that such conference will be held to allow bidders the opportunity to identify any discrepancies in the bid specifications and seek further clarification regarding instructions. The Purchasing Department will issue a written response to bidders' questions in the form of an Addendum. Please note that all official communication will be expressed in the form of an addendum.

All formal Addenda require written acknowledgement on the bid form by the bidder. Failure to acknowledge an Addendum on the bid form shall cause the bid to be rejected. JEFFERSON PARISH reserves the right to award bid to next lowest responsive and responsible bidder in this event.

The purpose and intention of this invitation to bid is to afford all suppliers an equal opportunity to bid on all construction, maintenance, repair, operating supplies and/or equipment listed in this bid proposal. JEFFERSON PARISH WILL ACCEPT ONE BID ONLY FROM EACH VENDOR. Items bid must meet specifications.

JEFFERSON PARISH will accept one price for each item unless otherwise indicated. Two or more prices for one item will result in bid rejection. Bidders are required to complete, sign and return the bid form and/or complete and return the associated line item pricing forms as indicated. Vendors must not alter the bid forms. Doing so will cause the bid to be rejected.

If the bid exceeds $30,000.00 and the company is duly authorized to do business in the state of Louisiana, a corporate resolution must be submitted with the bid or the person signing the bid documents must be listed on the Louisiana Secretary of State's website as an officer of the corporation, unless bidder has otherwise complied with LSA-R.S. 38:2212 (B)(5). If the bid is in excess of $30,000 and bidder is registered out of the state of Louisiana, a corporate resolution must be submitted with the bid, unless bidder has otherwise complied with LSA-R.S. 38:2212 (B)(5). Failure to comply will cause bid to be rejected; the Parish reserves the right to award bid to the next lowest responsive and responsible bidder in this event. Bids submitted by Owner or Sole Proprietorships must include certification that he or she owns the entity for which the bid is signed. This documentation must be submitted with the bid. Failure to do so will result in bid rejection.

NOTE: A sample corporate resolution can be downloaded from our website http://purchasing.jeffparish.net or you may provide your own document. A sample certification of sole proprietorship can also be downloaded from our website http://purchasing.jeffparish.net or you may provide your own document.

INSTRUCTIONS FOR BIDDERS AND GENERAL CONDITIONS

A. AWARD OF CONTRACT: JEFFERSON PARISH reserves the right to award contracts or place orders on a lump sum or individual item basis, or such combination, as shall in its judgment be in the best interest of JEFFERSON PARISH. Every contract or order shall be awarded to the LOWEST RESPONSIVE and RESPONSIBLE BIDDER, taking into consideration the CONFORMITY WITH THE SPECIFICATIONS and the DELIVERY AND/OR COMPLETION DATE. SPLIT AWARDS MADE TO SEVERAL VENDORS WILL ONLY BE GRANTED TO THOSE DEEMED RESPONSIVE AND RESPONSIBLE.

All bid prices shall remain valid for 45 days. Jefferson Parish and the lowest responsive and responsible bidder(s) by mutual written consent may mutually agree to extend the deadline for award by one (1) or more extensions of thirty (30) calendar days.

Preference is hereby given to materials, supplies, and provisions produced, manufactured or grown in Louisiana, quality being equal to articles offered by competitors outside the state. "LSA-R.S.38:2251-2261"

B. USE OF BRAND NAMES AND STOCK NUMBERS: Where brand names and stock numbers are specified, it is for the purpose of establishing certain minimum standards of quality. Bids may be submitted for products of equal quality, provided brand names and stock numbers are specified. Complete product data may be required prior to award.

C. CANCELLATION OF CONTRACT: JEFFERSON PARISH reserves the right to cancel all or any part if not shipped promptly. No charges will be allowed for parking or cartage unless specified in quotation. The order must not be filled at a higher price than quoted. JEFFERSON PARISH reserves the right to cancel any contract at anytime and for any reason by issuing a THIRTY (30) day written notice to the contractor.

For good cause and as consideration for executing a contract with Jefferson Parish, vendor conveys, sells, assigns and transfers to Jefferson Parish or its assigns all rights, title and interest in and to all causes of action it may now or hereafter acquire under the antitrust laws of the United States and the State of Louisiana, relating to the particular good or services purchased or acquired by Jefferson Parish.

D. PRICES: Jefferson Parish is exempt from paying sales tax under LSA-R.S. 47:301 (8)(c). All prices for purchases by Jefferson Parish of supplies and materials shall be quoted in the unit of measure specified and unless otherwise specified, shall be exclusive of state and Parish taxes. The price quoted for work shall be stated in figures. In the event there is a difference in unit prices and totals, the unit price shall prevail.

Quantities listed are for bidding purposes only. Actual requirements may be more or less than quantities listed.

Bidders are not to exclude from participation in, deny the benefits of, or subject to discrimination under any program or activity, any person in the United States on the grounds of race, color, national origin, or sex; nor discriminate on the basis of age under the Age Discrimination Act of 1975, or with respect to an otherwise qualified handicapped individual as provided in Section 504 of the Rehabilitation Act of 1973, or on the basis of religion, except that any exemption from such prohibition against discrimination on the basis of religion as provided in the Civil Rights Act of 1964, or Title VI and VII of the Act of April 11, 1968, shall also apply. This assurance includes compliance with the administrative requirements of the Revenue Sharing final handicapped discrimination provisions contained in Section 51.55 (c), (d), (e), and (k)(5) of the Regulations. New construction or renovation projects must comply with Section 504 of the 1973 Rehabilitation Act, as amended, in accordance with the American National Standard Institute's specifications (ANSI A17.1-1961).

Advertised bids will be tabulated and a copy of the tabulation will be forwarded to each responding bidder.

IN ACCORDANCE WITH STATE REGULATIONS JEFFERSON PARISH OFFERS ELECTRONIC PROCUREMENT TO ALL VENDORS

This electronic procurement system allows vendors the convenience of reviewing and submitting bids online. This is a secure site and authorized personnel have limited read access only. Bidders are encouraged to submit electronically using this free service; while the website accepts various file types, one single PDF file containing all appropriate and required bid documents is preferred. Bidders submitting uploaded images of bid responses are solely responsible for clarity. If uploaded images/documents are not legible, then bidder's submission will be rejected. Please note all requirements contained in this bid package for electronic bid submission.

Please visit the Purchasing Department webpage at http://purchasing.jeffparish.net to register and review Jefferson Parish solicitations.

The general specifications for construction projects and the purchase of materials, services and/or supplies are those adopted by the JEFFERSON PARISH Council by Resolution No. 113646 or 113647 dated 12/09/09. The general conditions adopted by this resolution shall be considered as much a part of this document as if they were written wholly herein. A copy may be obtained from the Office of the Parish Clerk, Suite 6700, Jefferson Parish General Government Building, 200 Derbigny Street, Gretna, LA 70053. You may also obtain a copy by visiting the Purchasing Department webpage at http://purchasing.jeffparish.net and clicking on Online Forms.

ADDITIONAL REQUIREMENTS FOR THIS BID

PLEASE MATCH THE NUMBERS PRINTED IN THIS BOX WITH THE CORRESPONDING INSTRUCTIONS BELOW.

1,3,4,5,6,8,10,11,12,13,15

MANDATORY

PRE-BID CONFERENCE TO BE HELD AT: GGB, 200 DERBIGNY ST. STE. 4400, GRETNA
10:00 AM
ON11/04/2016

1. All bidders must attend the MANDATORY pre-bid conference and will be required to sign in and out as evidence of attendance. In accordance with LSA R.S. 38:2212(I), all prospective bidders shall be present at the beginning of the MANDATORY pre-bid conference and shall remain in attendance for the duration of the conference. Any prospective bidder who fails to attend the conference or remain for the duration shall be prohibited from submitting a bid for the project.

2. Attendance to this pre-bid conference is optional. However, failure to attend the pre-bid conference shall not relieve the bidder of responsibility for information discussed at the conference. Furthermore, failure to attend the pre-bid conference and inspection does not relieve the successful bidder from the necessity of furnishing materials or performing any work that may be required to complete the work in accordance with the specification with no additional cost to the owner.

3. Contractor must hold current applicable JEFFERSON PARISH licenses with the Department of Inspection and Code Enforcement. Contractor shall obtain any and all permits required by the JEFFERSON PARISH Department of Inspection and Code Enforcement. The contractor shall be responsible for the payment of these permits. All permits must be obtained prior to the start of the project. Contractor must also hold any and all applicable Federal and State licenses. Contractor shall be responsible for the payment of these permits and shall obtain them prior to the start of the project.

4. A LA State Contractor's License will be required in accordance with LSA R.S. 37-2150 et. seq. and such license number will be shown on the outside of the bid envelope. Failure to comply will cause the bid to be rejected. Additionally if submitting the bid electronically, then the license number must be entered in the appropriate field in the Electronic Procurement system. Failure to comply will cause the bid to be rejected.

5. It is the bidder's responsibility to visit the job site and evaluate the job before submitting a bid.

6. Job site must be clean and free of all litter and debris daily and upon completion of the contract. Passageways must be kept clean and free of material, equipment, and debris at all times. Flammable material must be removed from the job site daily because storage will not be permitted on the premises. Precautions must be exercised at all times to safeguard the welfare of JEFFERSON PARISH and the general public.

INSTRUCTIONS FOR BIDDERS AND GENERAL CONDITIONS

7. PUBLIC WORKS BIDS: All awards for public works in excess of $5,000.00 will be reduced to a formal contract which shall be recorded at the contractor's expense with the Clerk of Court and Ex-Officio Recorder of Mortgages for the Parish of Jefferson. A price list of recordation costs may be obtained from the Clerk of Court and Ex-Officio Recorder of Mortgages for the Parish of Jefferson. All awards in excess of $25,000.00 will require both a performance and a payment bond. Unless otherwise stated in the bid specifications, the performance bond requirements shall be 100% of the contract price. Unless otherwise state in the bid specifications, the payment bond requirements shall be 100% of the contract price. Both bonds shall be supplied at the signing of the contract.

8. NON-PUBLIC WORKS BIDS: A performance bond will be required for this bid. The amount of the bond will be 100% of the contract price unless otherwise indicated in the specifications. The performance bond shall be supplied at the signing of the contract.

9. NON-PUBLIC WORKS BIDS: A payment bond will be required for this bid. The amount of the bond will be 100% of the contract price unless otherwise indicated in the specifications. The payment bond shall be supplied at the signing of the contract.

10. Unless otherwise stated in the bid specifications, the successful bidder will be required to procure standard insurance policies evidencing Parish-mandated insurance requirements as indicated on the attached "insurance requirements" sheet. All bidders must comply with the instructions in this sheet. Failure to comply will cause bid to be rejected.

11. A bid bond will be required with bid submission in the amount of 5% of the total bid, unless otherwise stated in the bid specifications. Acceptable forms shall be limited to cashier's check, certified check, or surety bid bond. All sureties must be in original format (no copies) If submitting a bid online, vendors must submit an electronic bid bond through the respective online clearinghouse bond management system(s) as indicated in the electronic bid solicitation on Central Auction House. No scanned paper copies of any bid bond will be accepted as part of the electronic bid submission.

12. This is a requirements contract to be provided on an as needed basis. JEFFERSON PARISH makes no representations on warranties with regard to minimum guaranteed quantities unless otherwise stated in the bid specifications.

13. Freight charges should be included in total cost when quoting. If not quoted FOB DELIVERED, freight must be quoted as a separate item. Bid may be rejected if not quoted FOB DELIVERED or if freight charges are not indicated on bid form.

14. PUBLIC WORKS BIDS - Completed, Signed and Properly Notarized Affidavits Required; This applies to all solicitations for construction, alteration or demolition of public buildings or projects, in conformity with the provisions contained in LSA-RS 38:2212.9, LSA-RS 38:2212.10, LSA-RS 38:2224, and Sec 2-923.1 of the Jefferson Parish Code of Ordinances. For bidding purposes, all bidders must submit with bid submission COMPLETED, SIGNED and PROPERLY NOTARIZED Affidavits, including: Non-Conviction Affidavit, Non-Collusion Affidavit, Campaign Contribution Affidavit, Debt Disclosures Affidavit and E-Verify Affidavit. For the convenience of vendors, all affidavits have been combined into one form entitled PUBLIC WORKS BID AFFIDAVIT. This affidavit must be submitted in its original format, and without material alteration, in order to be compliant and for the bid to be considered responsive. A scanned copy of the completed, signed and properly notarized affidavit may be submitted with the bid, however, the successful bidder must submit the original affidavit in its original format and without material alteration upon contract execution. Failure to comply will result in the bid submission being rejected as non-responsive. The Parish reserves the right to award bid to the next lowest responsive and responsible bidder in this event.

15. NON PUBLIC WORK BIDS - Completed, Signed and Properly Notarized Affidavits Required in conformity with the provisions contained in LSA – RS 38:2224 and Sec 2-923.1 of the Jefferson Parish Code of Ordinances. For bidding purposes, all bidders must submit with bid submission COMPLETED, SIGNED and PROPERLY NOTARIZED Affidavits, including: Non-Collusion Affidavit, Debt Disclosures Affidavit and Campaign Contribution Affidavit. For the convenience of vendors, all affidavits have been combined into one form entitled NON PUBLIC WORKS BID AFFIDAVIT. This affidavit must be submitted in its original format, and without material alteration, in order to be compliant and for the bid to be considered responsive. A scanned copy of the completed, signed and properly notarized affidavit may be submitted with the bid, however, the successful bidder must submit the original affidavit in its original format and without material alteration upon contract execution. Failure to comply will result in the bid submission being rejected as non-responsive. The Parish reserves the right to award bid to the next lowest responsive and responsible bidder in this event.

16. The ensuing contract for this bid solicitation may be eligible for FEMA reimbursement and/or Federal funding/reimbursement. As such, the referenced appendix will be applicable accordingly and shall be considered a part of the bid documents. All applicable certifications must be duly completed, signed and submitted with bid submission. Failure to submit applicable certifications with bid submission will result in bid rejection.

17. For this project, the Contractor shall not pay any state or local sales or use taxes on materials and equipment which are affixed and made part of the immovable property of the project or which permanently incorporated in the project (hereinafter referred to as "applicable materials and equipment"). All purchases of applicable materials or equipment shall be made by the contractor on behalf of and as the agent of Jefferson Parish (Owner), a political subdivision of the State of Louisiana. No state and local sales and use taxes are owned on applicable materials and equipment under the provisions of Act 1029 of the 1991 Regular Session – Louisiana Revised Statute 47:301(8)(c). Owner will furnish contractor a certificate form which certifies that Owner is not required to pay such state or local sales and use taxes, and contractor shall furnish a copy of such certificate to all vendors or suppliers of the applicable materials and equipment

It shall be the duty of every parish officer, employee, department, agency, special district, board, and commission: and the duty of every contractor, subcontractor, and licensee of the parish, and the duty of every applicant for certification of eligibility for a parish contract or program, to cooperate with the Inspector General in any investigation, audit, inspection, performance review, or hearing pursuant to Jefferson Parish Code of Ordinances Section 2-155.10(19). By submitting a bid, vendor acknowledges this and will abide by all provisions of the referenced Jefferson Parish Code of Ordinances.

BID NO.: 50-00118051

BID FORM

Non Public Works

All Public Work Projects are required to use the Louisiana Uniform Public Work Bid Form

All prices must be held firm unless an escalation provision is requested in this bid. Jefferson Parish will allow one escalation during the term of the contract, which may not exceed the U.S. Bureau of Labor Statistics National Index for all Urban Consumers, unadjusted 12 month figure. The most recently published figure issued at the time an adjustment is requested will be used. A request must be made in writing by the vendor, and the escalation will only be applied to purchases made after the request is made.

Are you requesting an escalation provision?

YES _____ NO _____

MAXIMUM ESCALATION PERCENTAGE REQUESTED _____%

INITIAL BID PRICES WILL REMAIN FIRM THROUGH THE DATE OF _____.

For the purposes of comparison of bids when an escalation provision is requested, Jefferson Parish will apply the maximum escalation percentage quoted by the bidder to the period to which it is applied in the bid. The initial price and the escalation will be used to calculate the total bid price. It will be assumed,for comparison of prices only, that an equal amount of material or labor is purchased each month throughout the entire contract.

DELIVERY: FOB JEFFERSON PARISH

INDICATE DELIVERY DATE ON EQUIPMENT AND SUPPLIES _____

LOUISIANA CONTRACTOR'S LICENSE NO.: (if applicable) _____

THIS SECTION MUST BE COMPLETED BY BIDDER:

FIRM NAME: _____

ADDRESS: _____

CITY, STATE: _____ ZIP: _____

TELEPHONE: ( ) _____ FAX: ( ) _____

EMAIL ADDRESS: _____

In the event that addenda are issued with this bid, bidders MUST acknowledge all addenda on the bid form.Bidder must acknowledge receipt of an addendum on the bid form as indicated. Failure to acknowledge any addendum on the bid form will result in bid rejection.

Acknowledge Receipt of Addenda: NUMBER: _____

NUMBER: _____

NUMBER: _____

NUMBER: _____

TOTAL PRICE OF ALL BID ITEMS: $ _____

AUTHORIZED SIGNATURE: _____ _____

Printed Name

TITLE: _____

SIGNING INDICATES YOU HAVE READ AND COMPLY WITH THE INSTRUCTIONS AND CONDITIONS.

NOTE: All bids should be returned with the BID NUMBER and BID OPENING DATE indicated on the outside of the envelope submitted to the Purchasing Department.

CORPORATE RESOLUTION

EXCERPT FROM MINUTES OF MEETING OF THE BOARD OF DIRECTORS OF

_____

INCORPORATED.

AT THE MEETING OF DIRECTORS OF _____
INCORPORATED, DULY NOTICED AND HELD ON _____,
A QUORUM BEING THERE PRESENT, ON MOTION DULY MADE AND SECONDED. IT WAS:

RESOLVED THAT _____, BE AND IS HEREBY APPOINTED, CONSTITUTED AND DESIGNATED AS AGENT AND ATTORNEY-IN-FACT OF THE CORPORATION WITH FULL POWER AND AUTHORITY TO ACT ON BEHALF OF THIS CORPORATION IN ALL NEGOTIATIONS, BIDDING, CONCERNS AND TRANSACTIONS WITH THE PARISH OF JEFFERSON OR ANY OF ITS AGENCIES, DEPARTMENTS, EMPLOYEES OR AGENTS, INCLUDING BUT NOT LIMITED TO, THE EXECUTION OF ALL BIDS, PAPERS, DOCUMENTS, AFFIDAVITS, BONDS, SURETIES, CONTRACTS AND ACTS AND TO RECEIVE ALL PURCHASE ORDERS AND NOTICES ISSUED PURSUANT TO THE PROVISIONS OF ANY SUCH BID OR CONTRACT, THIS CORPORATION HEREBY RATIFYING, APPROVING, CONFIRMING, AND ACCEPTING EACH AND EVERY SUCH ACT PERFORMED BY SAID AGENT AND ATTORNEY-IN-FACT.

I HEREBY CERTIFY THE FOREGOING TO BE A TRUE AND CORRECT COPY OF AN EXCERPT OF THE MINUTES OF THE ABOVE DATED MEETING OF THE BOARD OF DIRECTORS OF SAID CORPORATION, AND THE SAME HAS NOT BEEN REVOKED OR RESCINDED.

_____
SECRETARY-TREASURER

_____
DATE

Non-Public Works Bid
Affidavit Instructions

- **Affidavit is supplied as a courtesy to Affiants, but it is the responsibility of the affiant to insure the affidavit they submit to Jefferson Parish complies, in both form and content, with federal, state and parish laws.**
- **Affidavit must be signed by an authorized representative of the entity or the affidavit will not be accepted.**
- **Affidavit must be notarized or the affidavit will not be accepted.**
- **Notary must sign name, print name, and include bar/notary number, or the affidavit will not be accepted.**
- **Affiant MUST select either A or B when required or the affidavit will not be accepted.**
- **Affiants who select choice A must include an attachment or the affidavit will not be accepted.**
- **If both choice A and B are selected, the affidavit will not be accepted.**
- **Affidavit marked N/A will not be accepted.**
- **It is the responsibility of the Affiant to submit a new affidavit if any additional campaign contributions are made after the affidavit is executed but prior to the time the council acts on the matter.**

Instruction sheet may be omitted when submitting the affidavit

Non-Public Works Bid

AFFIDAVIT

STATE OF _____

PARISH/COUNTY OF _____

BEFORE ME, the undersigned authority, personally came and appeared: _____ _____, (Affiant) who after being by me duly sworn, deposed and said that he/she is the fully authorized _____ of _____ (Entity), the party who submitted a bid in response to Bid Number _____, to the Parish of Jefferson.

Affiant further said:

Campaign Contribution Disclosures

(Choose A or B, if option A is indicated please include the required attachment):

Choice A _____ Attached hereto is a list of all campaign contributions, including the date and amount of each contribution, made to current or former elected officials of the Parish of Jefferson by Entity, Affiant, and/or officers, directors and owners, including employees, owning 25% or more of the Entity during the two-year period immediately preceding the date of this affidavit or the current term of the elected official, whichever is greater. Further, Entity, Affiant, and/or Entity Owners have not made any contributions to or in support of current or former members of the Jefferson Parish Council or the Jefferson Parish President through or in the name of another person or legal entity, either directly or indirectly.

Choice B _____ there are **NO** campaign contributions made which would require disclosure under Choice A of this section.

Debt Disclosures

(Choose A <u>or</u> B, if option A is indicated please include the required attachment):

Choice A _____ Attached hereto is a list of all debts owed by the affiant to any elected or appointed official of the Parish of Jefferson, and any and all debts owed by any elected or appointed official of the Parish to the Affiant.

Choice B _____ There are **<u>NO</u>** debts which would require disclosure under Choice A of this section.

Affiant further said:

That Affiant has employed no person, corporation, firm, association, or other organization, either directly or indirectly, to secure the public contract under which he received payment, other than persons regularly employed by the Affiant whose services in connection with the construction, alteration or demolition of the public building or project or in securing the public contract were in the regular course of their duties for Affiant; and

[*The remainder of this page is intentionally left blank.*]

That no part of the contract price received by Affiant was paid or will be paid to any person, corporation, firm, association, or other organization for soliciting the contract, other than the payment of their normal compensation to persons regularly employed by the Affiant whose services in connection with the construction, alteration or demolition of the public building or project were in the regular course of their duties for Affiant.

_____
Signature of Affiant

_____
Printed Name of Affiant

SWORN AND SUBSCRIBED TO BEFORE ME
ON THE _____ DAY OF _____, 20___.

_____
Notary Public

_____
Printed Name of Notary

_____
Notary/Bar Roll Number

My commission expires _____.

STANDARD INSURANCE REQUIREMENTS – PUBLICLY ADVERTISED BIDS

All required insurance under this bid shall conform to Jefferson Parish Resolution No. 113646 or No. 113647, as applicable. Contractors may not commence any work under any ensuing contract unless and until all required insurance and associated evidentiary requirements thereto have been met, along with any additional specifications contained in the advertised bid. Except as where otherwise precluded by law, the Parish Attorney or his designee, with the concurrence of the Director of Risk Management or his designee, may agree on a case-by-case basis, to deviate from Jefferson Parish's standard insurance requirements, as provided in this Section. Vendors requesting deviation therefrom shall submit such requests in writing, along with compelling substantiation, to the Purchasing Department prior to the bid's due date. Any changes to the insurance requirements will be reflected in the bid specifications and addenda. Prior to contract execution and at all times thereafter during the term of such contract, contractors must provide and continuously maintain all coverages as required by the foregoing Resolutions, and the contract documents. Failure to do so shall be grounds for suspension, discontinuation or termination of the contract.

For bidding purposes, bidders must submit with bid submission a current (valid) insurance certificate evidencing the required coverages. Failure to comply will cause bid to be rejected. The current insurance certificate will be used for proof of insurance at time of evaluation. Thereafter, and prior to contract execution, the low bidder will be required to provide final insurance certificates to the Parish which shall name the Jefferson Parish, its Districts Departments and Agencies under the direction of the Parish President and the Parish Council as additional insureds regarding negligence by the contractor for the Commercial General Liability and the Comprehensive Automobile Liability policies. Additionally, said certificates should reflect the name of the Parish Department receiving goods and services and reference the respective Jefferson Parish bid number.

JEFFERSON PARISH REQUIRED STANDARD INSURANCE

☑ **WORKER'S COMPENSATION INSURANCE**

As required by Louisiana State Statute, exception; Employer's Liability, Section B shall be $1,000,000 per occurrence when Work is to be over water and involves maritime exposures to cover all employees not covered under the State Worker's Compensation Act, otherwise this limit shall be no less than $500,000 per occurrence.

Note: If your company is not required by law to carry workmen's compensation insurance, i.e. not a Louisiana company, sole employee of the company, then bidders must request a workmen's compensation insurance declaration affidavit prior to the bid opening date. This insurance declaration affidavit must be fully completed, signed, properly notarized and submitted with the bid. A scanned copy may be submitted with the bid; however, the successful bidder must submit the original affidavit in its original format and without material alteration upon contract execution. Failure to comply will result in the bid submission being rejected as non-responsive. The Parish reserves the right to award bid to the next lowest responsive and responsible bidder in this event.

☑ **COMMERCIAL GENERAL LIABILITY**

Shall provide limits not less than the following: $1,000,000.00 Combined Single Limit per Occurrence for bodily injury and property damage.

☑ **COMPREHENSIVE AUTOMOBILE LIABILITY**

Bodily injury liability $1,000,000.00 each person; $1,000,000.00 each occurrence. Property Damage Liability $1,000,000.00 each occurrence.

Note: This category may be omitted if bidders do not/will not utilize company vehicles for the project or do not possess company vehicles. Bidder must request an automobile insurance declaration affidavit prior to the bid opening date. This insurance declaration affidavit must be fully completed, signed, properly notarized and submitted with the bid. A scanned copy of the completed, signed and properly notarized affidavit may be submitted with the bid; however, the successful bidder must submit the original affidavit in its original format and without material alteration upon contract execution. Failure to comply will result in the bid submission being rejected as non-responsive. The Parish reserves the right to award bid to the next lowest responsive and responsible bidder in this event.

DEDUCTIBLES

No insurance required shall include a deductible not greater than $10,000.00. The cost of the deductible shall be borne by the contractor.

NOTE: If the vendor requires a change in deductibles, the request must be submitted in writing to the Purchasing Department prior to the due date of the bid. Such request shall be reviewed by the Parish Attorney's Office with the concurrence of the Director of Risk Management.

UMBRELLA LIABILITY COVERAGE

An umbrella policy or excess may be used to meet minimum requirements.

FOR CONSTRUCTION AND RENOVATION PROJECTS:

The following are required unless otherwise specified in the bid. Such insurance is due upon contract execution.

1) **OWNER'S PROTECTIVE LIABILITY**

   To be for the same limits of liability for bodily injury and property damage liability established for commercial general liability.

2) **BUILDER'S RISK INSURANCE**

   The contractor shall maintain Builder's Risk Insurance at his own expense to insure both the owner (Parish of Jefferson) and contractor as their interest may appear.