Louisiana

Department of Transportation And Development

Traffic Control Standard

Number 155

TS-2 Traffic Signal Cabinet

STATE OF LOUISIANA
LEI Q. WANG
License No. 33365
PROFESSIONAL ENGINEER

8/31/2016

August 31, 2016

Cabinet, Ground Mount, TS2 (SAP No. 51050)
Cabinet, Pole Mount, TS2 (SAP No. 51060)
Bus Interface Unit (BIU) (SAP No. 51051)
Malfunction Management Unit (MMU) (SAP No. 51052)

1. **TS-2 CABINET ASSEMBLY**

1.1. The TS-2 cabinet assembly shall be able to house a NEMA TS-2, Type 1 or 2 controller unit. At a minimum, the assembly shall be a fully loaded cabinet and include, the cabinet, three (3) BIU's, flasher, card rack(s), an MMU, a 24 volt external power supply, and eight (8) flash transfer relays. The ground mounted cabinet shall be configuration 4 (16 position) as defined by NEMA TS-2 clause 5.3, the assembly shall include sixteen (16) load switches. The pole mounted cabinet shall be configuration 3 (12 position), the assembly shall include twelve (12) load switches. All cabinets shall include necessary mounting hardware.

1.2. Cabinet Design Requirements

1.2.1. The cabinet exterior shall be constructed using unpainted sheet or cast aluminum alloy with a minimum thickness of 0.125" (3.2mm). The aluminum alloy shall be ASTM No. 5052-H32 or equivalent. No wood, wood fiber products or other flammable material shall be used in the cabinet. All welds shall be neat and of uniform consistency.

1.2.2. The cabinet interior, including shelves, shall be powder coated white in color.

1.2.3. Cabinets shall be manufactured to prevent accumulation of water on its top surface and slope in a manner to drain water to the back side of the cabinet.

1.2.4. The following table defines the cabinet options, size of the cabinet, backpanel configuration, and he load bay size:

Cabinet Options	Size of Cabinet	Backpanel Configuration	Size of Load Bay
Ground Mounted	Width : 44" (111.76cm) Height: 67" (170.18cm) to– 77" (195.58cm) Depth: 24" (60.96cm)	Configuration 4	16 position load bay

Pole Mounted	Width: 22" (55.88cm) to - 36" (91.44cm) Height: 60" (152.4cm) to 70" (177.8cm) Depth : 15" (38.1cm) to 17" (43.18cm)	Configuration 3	12 position load bay

1.2.5. Two (2) aluminum-lifting eyes or ears shall be attached to the cabinet with a single carriage bolt to permit lifting the cabinet with a sling. The corners of each eye or ear shall be chamfered or rounded and in the down position when shipped.

1.2.6. Vertical shelf support channels shall be provided to permit adjustment of shelf location in the field. The channels shall have a single continuous slot to allow shelves to be placed at any height within the cabinet. Channels with fixed notches or holes are not acceptable.

1.2.7. Each cabinet shall be equipped with an additional pair of unistrut channels or a keyhole panel on either side of the front section of the cabinet to permit mounting of additional equipment as necessary.

1.2.8. The cabinet assembly shall come with the capability to accept a generator connection to supply complete power to the traffic cabinet. When an external power source is connected, the traffic cabinet shall automatically transfer the AC line current from the external generator. When the external power is removed, the transfer relay will automatically transfer back to the normal AC power, without disruption to the signal operations.

1.2.9. The generator plug shall be a 30 amp, three prong, flanged male, twist lock connector. The connector shall be a Hubbel model #2615 or equivalent, and shall be mounted internally in the cabinet, and accessible through its own locking access door. The generator door shall allow the generator to be plugged in and the generator door to be locked. A dust cover for the generator wire shall cover the hole when not in use. The generator access door shall utilize the same type lock and key mechanism for the police door referenced in this specification for the police compartment. A dust cover for both the police key and the generator wire shall be provided on the generator access door. The generator access door shall be mounted flush with the cabinet assembly and shall be hinged for easy access by maintenance personnel.

1.2.10. Shelves shall be at least 12" (330mm) deep and be located in the cabinet to provide a 0.5" (12.5mm) clearance between the back of the shelf and the back of the

cabinet. Shelf surface shall be of slotted and not of solid construction. The slots shall be of sufficient size to accommodate the fastening of racks and peripherals. A 1.5" (38mm) thick drawer shall be provided in the cabinet, mounted directly beneath the controller support shelf. The drawer shall have a hinged top cover and shall be capable of storing documents and miscellaneous equipment. This drawer shall support up to 50lb. (22.5 kg) in weight when fully extended. The drawer shall open and close smoothly. Drawer dimensions shall make maximum use of available depth offered by the controller shelf, a minimum of 23.5" (600 mm) for base mounted cabinet, and shall make maximum use of available width for the pole mounted cabinet. The drawer shall have holes drilled in the bottom for drainage.

1.2.11. Three (3) shelves shall be provided in the cabinet and shall be at minimum 12" (305 mm) apart in height. There shall be sufficient shelf space to accommodate a controller unit 13" (330mm) high, an MMU, one (1) sixteen (16) position detector card rack with external power supply and optical detection devices. An additional space at least 12" (305mm) high, 12.5" (325mm) wide, and 12" (305mm) deep shall be provided. The controller unit, MMU, card rack, and power supply shall be placed on the shelves in such a manner that sufficient ventilation is provided to all components. Labels showing the proper placement of each component shall be provided along the shelves to ensure proper placement. All shelves shall have a raised back edge to stop equipment from passing the back edge of the shelf. The edge shall be a minimum of 0.5" (13mm) from the rear wall of the cabinet and be constructed from one continuous piece of metal.

1.2.12. The cabinet shall be vented and cooled by two (2) independent thermostatically controlled fans. The fans shall be a commercially available model with a capacity of at least 100 cubic feet per minute. The thermostats shall independently control each fan and have an adjustable range of 68 degrees F to 160 degrees F. A press-to-test switch shall be provided to test the operation of the fans. The thermostats shall be field adjustable to switch on and off at any temperature between 68 degrees F and 160 degrees F.

1.2.13. The cabinet shall be provided with a unique serial number which shall be stamped directly on the cabinet or engraved on a metal or metalized Mylar plate, epoxied to the cabinet. The serial number shall be minimum 0.19" (5mm) in height and located on the upper right sidewall of the cabinet near the front.

1.2.14. The pole mounted cabinets shall be provided with provisions to attach a pole bracket to a reinforcement plate permanently mounted to the back, top, and center of the cabinet. The reinforcement to the cabinet shall be designed to support the weight of the cabinet and the equipment intended to be contained within and the structural loads referred to in this specification. Two 3/8 inch holes shall be drilled through the cabinet, within the reinforced area, 2 inches from center line of the width of the cabinet. Countersink each hole on the outside of the cabinet for flat head screws. Install two 5/16" flathead screws in the mounting holes with the top of the screw heads to be flush with the surface of the cabinet wall.

1.2.15. The pole mounted cabinet shall be pre-drilled for two (2), 3 inch wire entrance holes, one in the top and one in the bottom, both at the back edge and centered on the width of the cabinet and one (1) 2 inch entrance hole adjacent to the 3-inch hole on the bottom as shown in the attached drawing. Two (2), 3" and one (1) 2" to 1" Meyers hubs shall be installed on the cabinet. The hubs shall centered on the entrance holes and attached to the cabinet using four (4) 5/16 inch-18-tpi by 1-1/2 inch long hex head bolts, with lock washers and hex nuts. The hubs and cabinet shall be pre-drilled for mounting the hubs to the cabinet with the above mentioned bolts using a bolt pattern of 2-1/8 inches centered on a line perpendicular to the back of the cabinet, by 3-3/4 inches parallel to the back of the cabinet. The centers of the bolt pattern on the hub and the wire entrance hole shall coincide. The location of the hubs shall allow minimum clearance for box end wrenches to fit onto the nuts within the cabinet.

1.2.16. Pole clamps shall be provided with the pole mounted cabinet for mounting the cabinet to a steel pole. The clamp shall be cast aluminum meeting the requirements for the cabinets and designed to hold the weight of the mentioned cabinets and the equipment contained within. The design shall provide four contact points with the pole and shall be adjustable for pole diameters from 8 inches to 12 inches. The clamp shall be divided into two parts, one half to be attached to the cabinet and the other half to be installed on the "back" side of the pole. The clamp shall have a slotted opening for coupling the clamp together using 5/8-inch galvanized all thread bolts and nuts. The clamp shall have a flat surface area, 4-1/2 inches x 2 inches minimum that attaches to the cabinet. Two (2) 5/16 inch - 18 tpi, drilled and tapped holes spaced 4 inch center to center shall be centered within the flat area. The flat area shall space the back of the cabinet a minimum of 2 inches from the pole.

1.3. Cabinet Door

1.3.1. The cabinet shall be provided with one door in front that will provide access to the cabinet. The door shall be provided with three (3) hinges with non-removable stainless steel pins, or a full-length piano hinge with stainless steel pins spot welded at the top of the hinge. The hinges shall be mounted so it is not possible to remove them from the door or cabinet without first opening the door. The bottom of the door opening shall extend at least to the bottom level of the back panel. The door and hinges shall be braced to withstand a 74 kg per vertical meter of door height load applied to the outer edge of the door standing open. There shall be no permanent deformation or impairment of any of the door or the cabinet body when the load is removed.

1.3.2. The cabinet door shall be fitted with a Number 2 Corbin lock (#2 key) and metal handle with a minimum 0.62" (16mm) diameter shaft (or equal cross-sectional area for a square shaft) and a three (3) point latch. The lock and latch design shall be such that the handle cannot be released until the lock is released. One (1) key shall

be provided for each cabinet. A gasket shall be provided to act as a permanent dust and weather resistant seal at the controller cabinet door facing. The gasket material shall be of a nonabsorbent material and shall maintain its resiliency after long term exposure to the outdoor environment. The gasket shall have a minimum thickness of 0.24" (6.25mm). The gasket shall be located on the door. An "L" bracket is acceptable in lieu of this channel if the gasket is fitted snugly against the bracket to insure a uniform dust and weather resistant seal around the entire door facing.

1.3.3. The cabinet door shall be provided with a door stop which holds the door open at positions of 90 and 180 degrees F. A means shall be provided to minimize the accidental release of the door stop. The door stop shall be located at the bottom or top of the door.

1.3.4 A locking auxiliary police door shall be provided in the door of the cabinet to provide access to a panel that shall contain:

- Signal - On/Off switch. ON position the signal will be in the programmed signal operation. OFF position power will be shut off to the signal heads while the controller is running.

- EVENT (Autoflash) - On/Off switch. ON position the controller will apply a program or soft flash through the load switches. OFF position the controller will run in the normally programmed state. Label switch as EVENT.

- Manual/Auto Switch - All necessary wiring, (manual control enable, interval advance, logic ground) shall be routed to the panel and terminated. The switch shall switch the function of the controller from normal operation in the "Auto" position to a manual advance operation in the "Manual" position by a manual push button to advance the controller in accordance with the NEMA standards. In addition to the switch, a manual control shall be provided. The cord shall be terminated on a terminal strip attached to the back of the police panel. The cord shall be weatherproof and coiled, having a maximum retracted length of eight inches and a minimum extended length of five feet.

- EMERGENCY (Auto/Flash) - AUTO position the signal will be in the programmed signal operation. FLASH shall place the cabinet in flash from the two-circuit flasher. Label switch as EMERGENCY.

The police door shall be gasketed to prevent entry of moisture and/or dust.

The door lock shall be Corbin Type Blank 04266, or equivalent and provided with one (1) brass key.

Provide guards in between toggle switches on the inside of door to stop switches being unintentionally activated.

1.3.4. On base mounted cabinets the intake for the vent system shall be filtered with a permanent air filter. The minimum filter dimensions shall be 25" (635mm) wide X 16" (406mm) high X 0.98" (25mm) thick. On pole mounted cabinets the filter shall be sized by the manufacturer to accommodate the fan size. The filter shall be securely mounted so that any air entering the cabinet must pass through the filter. The cabinet opening for intake of air shall be large enough to use the entire filter. The air intake and exhaust vent shall be screened to prevent entry of insects. The screen shall have an opening no larger than 8.1mm X 8.1mm.0.31 sq. in. (8.1 sq. mm). The total free air opening of the exhaust vent shall be large enough to prevent excessive back-pressure on the fan.

1.4. Wiring

1.4.1. All wiring within the cabinet shall be neat and routed such that opening and closing the door or raising or lowering the back panel will not twist or crimp the wiring. All wiring harnesses shall be braided, sheathed in nylon mesh sleeving, or made of PVC or polyethylene insulated jacketed cable. Wiring leading to the cabinet door shall be sheathed in nylon mesh sleeving or be PVC jacketed cable only. All SDLC cabling shall be Belden 7203A or equal.

1.5. General

1.5.1.1. All conductors between the main power circuit breakers and the signal power bus shall be a minimum size of 10 AWG stranded copper. All conductors carrying individual signal lamp current shall be a minimum size of 16 AWG stranded copper. All AC service lines shall be of sufficient size to carry the maximum current of the circuit or circuits they are provided for. Minimum cabinet conductor wire size shall be 22 AWG stranded copper. All wiring and insulation shall be rated for 600V or greater.

1.5.1.2. Conductors for AC common shall be white. Conductors for equipment grounding shall be green. All other conductors shall be a color different than the foregoing.

1.5.1.3. Identification sleeves shall be supplied on specified wires. The sleeve shall have the identification printed or typed with a minimum size of pica-pitch 10. The sleeve shall be installed on the wire providing a self-laminating protective shield over the legend. Acceptable material shall be transparent 3.5 mil, vinyl film with acrylic pressure sensitive adhesive. The size of the label shall provide sufficient area for the printed identification. Application of the sleeve onto the wire shall be neat and smooth completely protecting the

identification label.

1.5.1.4. A barrier terminal block shall be provided with a minimum of three (3) compression fitting terminals designed to accept up to a number 4 AWG stranded wire for connection of the AC power lines. The block shall be rated at 50A.

1.5.1.5. All terminals shall be permanently identified in accordance with the cabinet wiring diagram. Where through-panel solder lugs or other suitable connectors are used, both sides of the panel shall have the terminals properly identified. Identification shall be permanently attached and as close to the terminal strip as possible and shall not be affixed to any part which is easily removable from the terminal block panel.

- Terminal facilities shall be labeled with color labels that correspond to the appropriate signal indication color. Field terminal strip wiring colors shall match the red, yellow, and green output from the load switch.

- Each controller input and output function shall be distinctly identified with no obstructions, at each terminal point in the cabinet, with both a number and the function designation. The same identification must be used consistently on the cabinet wiring diagrams.

- Each load switch socket shall be identified by load switch output number. These labels shall be designated as LS1 to LS16 from left to right. No cabinet equipment, including the load switches themselves, may obstruct these identifications.

- Each flash transfer base and power relay base shall be properly identified with no possible obstructions.

- Each harness within the cabinet shall be distinctly identified by function on the connector end.

- The flasher socket shall be distinctly identified with no possible obstruction. The flasher shall be labeled as FLASHER.

- All other sockets needed within the cabinet, shall be distinctly identified.

- All switches with the exception of detector test switches and preemption switches shall be NEMA heavy duty toggle switches, rated at 15 or 20 Amps/125 VAC. The detector test switches and preemption switches shall be toggle but do not have to be heavy duty.

1.5.2. The controller unit harness (a plug) shall be long enough to reach any point

15.75" (400mm) above the timer shelf. The MMU harness and any required auxiliary harness shall reach 23.62" (600mm) from the MMU shelf.

1.5.3. An unused, spare terminal block providing ten (10) terminals shall be provided. This block shall be double 8-32 X 5/16 inch (7.93mm) binder head screw design with shorting bars. These terminal strips shall be located on the lower third of either side of the cabinet.

1.5.4. Copper ground buses shall be provided for both the power supply neutral (common) and chassis ground. Each bus bar must provide a minimum of ten (10) unused terminals with 8-32 X 5/16 inch (7.93mm) or larger screws. The AC neutral and chassis ground buses shall be jumpered together with a minimum number 10 AWG wire.

1.5.5. Two (2) 20A and one (1) 30A thermal type circuit breakers shall be mounted and wired in the cabinet. One (1) 20A breaker shall protect the base light, trouble light, GFCI receptacle, modem duplex receptacle, and fans. The other 20A breaker shall be a spare. The 30A breaker shall protect the signal load circuits, controller circuits, MMU, flasher, and card rack detector power supply. The breakers shall be Square "D" QOU 150 Series, or equal.

1.5.6. The circuit breakers shall be equipped with solderless connectors and installed on the right side wall (facing the cabinet) or lower right hand side of the back panel inside the cabinet. The breakers shall be easily accessible. The breakers shall be positioned so that the rating markings are visible.

1.5.7. A ground fault circuit interruption (GFCI) type duplex receptacle shall be mounted and wired in the lower right side wall of the cabinet. A convenience outlet (for video detector monitors) shall be mounted and wired in the upper right side of the cabinet. This duplex shall be wired into a third cabinet door switch that will remove power when the door is closed. These receptacles shall be wired on the load side of the 20A circuit breaker.

1.5.8. A seven (7) outlet power strip shall be mounted and wired in the upper left or right side of the cabinet. This outlet should be configured to allow the use of at least three (3) transformer style plugs.

1.5.9. The 20A and 30A breakers are required in addition to any optional auxiliary fuses that may be furnished with the controller to protect component parts, such as transformers, etc.

1.5.10. The cabinet shall include a surge protection device (SPD) on the AC service input that meets or exceeds the following requirements: The SPD shall be installed on the load side of the cabinet over current device. The SPD shall be equipped with a light or indicator to indicate when a failure has occurred in the surge protection circuitry and have NO/NC contacts for remote alarm. The SPD shall conform to the

following:

- Withstand a peak surge current for an 8 X 20 microsecond waveform; minimum 20,000A for 15 occurrences at 3 minute intervals between surges without damage or degradation to the SPD (less than a 10% change in operating parameters).

- Suppressed Voltage Rating as defined by UL1449, 2nd edition or latest revision, shall be 400V maximum and Voltage Protection Rating as defined by UL1449, 3rd edition, of 600V maximum.

- Devices that are wired in series shall be rated for 30A maximum continuous operating current at 120V/60 Hz.

- Nominal line or system voltage shall be 120V AC.

- Minimum short circuit current rating shall be 20 kA.

- Maximum continuous operating voltage (rms) shall be a minimum of 135V AC.

- Rated to operate in ambient temperature range of -34°C to +74°C
.
- Protected modes shall be L-G, L-N & N-G.

- Shall be provided in an enclosure suitable for the temperature range and outdoor environments.

- Shall be provided with mounting hardware, be surface mountable and fit into a space 6" (152mm) long X 5" (127mm) wide X 4" (101mm) deep or less.

- Connections shall be either wire clamping box terminals, lugs, or minimum number 12 AWG wire. Connections for NO/NC contacts shall accept or be minimum stranded number 18 AWG wire.

1.5.11. The SPD ground connection shall be connected to the cabinet ground bus by means of a short, copper ground strap or minimum number 10 AWG insulated conductor.

1.5.12. If connected in series, the SPD shall be connected to the line filter. Number 10 AWG or larger wire shall be used for connections to the SPD, line filter and load switch bus.

1.5.13. An LED light shall be installed in the top of the cabinet. The LED light shall be within the upper three inches from the top and toward the door side of the cabinet.

This LED light shall turn on when the cabinet door is opened, and turn off when the cabinet door is closed. A MOV or other such transient suppression device shall be placed across the AC power input to the LED light.

1.5.14. An LED light shall be installed on the bottom side of the drawer. The LED light shall be within four inches from the front edge of the drawer. This LED light shall turn on when the cabinet door is opened, and turn off when the cabinet door is closed. A MOV or other such transient suppression device shall be placed across the AC power input to the LED light

1.5.15. A radio frequency interference (RFI) suppresser shall be provided and installed on the load side of the signal circuit breaker and shall be protected by the surge protector. This filter shall be rated at 50A and shall provide a minimum attenuation of 50 decibels over the frequency range of 200 Kz to 75 Mz.

1.5.16. Surge suppression devices shall be placed on the coil side of all relays in the cabinet. DC relay coils shall have, as a minimum, a reversed biased diode across the coil. AC relays shall have MOV's or equal suppression across their coils. RC networks are acceptable. One suppression device shall be supplied for each relay.

1.5.17. Except where soldered, all wires shall be provided with lugs or other approved terminal fittings for attachment to binding posts. Insulation parts and wire insulation shall be insulated for a minimum of 600V.

1.5.18. The outgoing traffic control signal circuits shall be of the same polarity as the line side of the power source.

1.5.19. All panels inside the cabinet shall be black anodized with white silk screen lettering, unless otherwise approved.

1.5.20. The switch panel shall be provided on the inside face of the cabinet door. This panel shall house three (3) switches as specified below.

- "Stop Timing" When the switch is in the ON position the controller unit and any auxiliary equipment shall stop timing. When the switch is in the AUTO position the controller and any auxiliary equipment shall time as programmed.

- "Test-Normal". When the switch is in the AUTO position, there is normal controller cabinet operation. When the switch is in the FLASH position, the call for flashing operation shall permit the controller unit to continue to run so that its operation can be observed.

- "Controller" When switch is in the ON position the controller will run normally. When the switch is in the OFF position the power to the controller is off.

1.5.21. The cabinet shall be wired so that a fault activation by the MMU will cause the controller unit, and any auxiliary equipment, to stop timing.

1.5.22. Conflict and manual flash shall be wired for all red.

1.5.23. The cabinet shall be designed and equipped with enough transfer relays for changing any main street indications (movement Phases 2, 6, and/or 1, 5) to amber for the conflict and/or manual flash operation on the face of the back panel or a side panel, using only simple tools.

1.5.24. Transfer relays shall be the plug-in type by, AEMCO, Struthers-Dunn (Part No. 136-62T3A1), AEMCO (Part No. 136-4992), or equal. The relays shall have contacts a minimum of 3/8 inch diameter in size and shall be rated at a minimum of 30A/102/240V AC, 20A/28V DC.

1.5.25. The red enable and remote reset from the MMU shall be terminated on the face of the back panel.

1.5.26. A 75A, solid-state relay shall be wired between the RFI filter output and the load switch power bus. The relay shall be controlled by the signal shutdown switch and the flash switch. The relay shall be mounted to a heat sink designed to allow maximum current flow at 165° F (74° C) without damaging the relay.

1.5.27. All exposed AC wiring points, including the RFI filter, surge suppresser, and solid state relay shall be covered with a minimum 3/16" thick clear non-conductive plastic cover to prevent accidental contact. Unless otherwise noted in this specification, wiring at terminal strips is exempt from this requirement.

1.5.28. The load switch outputs shall be brought out through posted 10-32 X 5/16 inch binder head screw terminals. Field wiring for the signal heads shall be connected at this terminal strip.

1.6. Panels

1.6.1. The power panel and backpanel shall be located on the lower half of the back cabinet wall, approximately 12" (305mm) from the cabinet bottom of ground mounted cabinets and 5" (127mm) to 9.4" (240 mm) for pole mounted cabinets. Each signal indication shall be protected by an MOV.

1.6.2. Pole and ground mounted cabinets shall leave room adequate to install a 15" x 10" x 4" thick camera panel to the unistrut.

2. MALFUNCTION MANAGEMENT UNIT (MMU)

2.1. The Malfunction Management Unit shall be a shelf mountable sixteen (16) channel solid

state unit meeting at a minimum Section 4 of the NEMA Standards Publication TS-2 2003, or latest revision. The Malfunction Management Unit shall be compatible with the communications requirements for the current approved controllers and be capable of a remote log upload to the department's transportation management system. Each Malfunction Management Unit shall utilize and provide a programming card specified in the above mentioned NEMA Standards.

2.2. No circuit cuts shall be allowed on circuit boards in any of the equipment supplied. Any wire jumpers included on circuit boards shall be placed in plated through holes that are specifically designed to contain them. Jumpers that are tack soldered to circuit traces or that are added to correct board layout errors are not acceptable.

2.3. All Integrated Circuits (ICs) with sixteen (16) or more pins shall be mounted in machine tooled sockets or surface mounted. All sockets shall have two-piece, machined contacts and closed end construction to eliminate solder wicking. The outer sleeve shall be brass with tin or gold plating and tapered to allow easy IC insertion. The inner contact shall be beryllium copper sub-plated with nickel and plated with gold. All sockets shall have thermoplastic bodies meeting UL Specification 94V-0. Surface mount devices will be allowed. Sockets meeting alternate specifications shall be submitted in writing with the solicitation. Zero insertion force sockets will not be allowed.

2.4. The design shall allow for removal or replacement of a circuit board without unplugging or removing other circuit boards.

2.5. The unit shall be designed so that one side of each board can be completely accessible for troubleshooting and testing the unit while it is still operating. This may be accomplished with extender boards or cables. This need apply to only one circuit board at a time.

2.6. No more than two (2) circuit boards shall be attached to each other to constitute a circuit assembly. The boards shall be designed so the Department can test and operate the controller unit with the boards separated.

2.7. The MMU shall be configured according to Table 1-1.

TABLE 1-1

Channel	Load Switch	Phase
Channel 1	Load Switch 1	Phase 1 Vehicle
Channel 2	Load Switch 2	Phase 2 Vehicle
Channel 3	Load Switch 3	Phase 3 Vehicle
Channel 4	Load Switch 4	Phase 4 Vehicle

Channel 5	Load Switch 5	Phase 5 Vehicle
Channel 6	Load Switch 6	Phase 6 Vehicle
Channel 7	Load Switch 7	Phase 7 Vehicle
Channel 8	Load Switch 8	Phase 8 Vehicle

2.8. The MMU shall display the active or inactive state of each circuit on all sixteen (16) channels using one of the two following methods:

2.8.1. The MMU shall provide three (3) LEDs per channel for all sixteen (16) channels on the unit. A red, yellow, or green colored LED shall be used to correspond to the appropriate circuit output for each channel. The LEDs shall illuminate to indicate the active status for each circuit.

2.8.2. The MMU shall provide a liquid crystal display (LCD) showing the status of each circuit for all sixteen (16) channels on the unit. The active or inactive state for each circuit shall be indicated on the display.

2.9. The MMU shall support Flashing Yellow Arrow operation (FYA) with the ability of local firmware upgrades.

2.10. Each MMU shall have a unique serial number that is permanently and neatly displayed on the face of the unit. If this is located elsewhere on the unit, then an additional label that is neatly printed or typed shall be affixed to the MMU face.

3. DETECTOR PANEL AND CARD RACK

3.1. The cabinet shall have a loop detector panel located on the left side of the cabinet. This panel shall provide for all connections between loops at the street and the detector amplifiers as described in the following sections.

3.2. Detector Card Rack

3.2.1. Ground mounted cabinets shall have two TS-2 16 channel racks, the first rack with an additional four (4) emergency preemption channels. Pole mounted cabinets shall have one TS-2 16 channel rack with an additional four (4) emergency preemption channels.

3.2.2. The detector card rack shall have a rigid frame and shall be fabricated from aluminum and shall have slots set in a modular fashion such that the PCB edge connectors shall plug into the rear while sliding between top and bottom card guides for each module. Mounting flanges shall be provided and be turned outward for ease of access. The detector card rack shall be bolted to a cabinet shelf. It shall be possible to unbolt the rack using simple tools.

3.2.3. All wiring to the rack shall be labeled and neatly run to other parts of the cabinet and detector termination panel. To improve signal isolation, all loop inputs shall be

wired with shielded twisted pair leads, Beldon 9451, 2 conductor, 22 AWG with 24 AWG drain wire, shielded cable or equal. All grounds within the twisted pair leads shall be connected at the detector terminal panel.

3.2.4. The slots shall be numbered 1 to 8 left to right when viewed from the front of the rack. A flange shall be provided on the top and the bottom of the rack with a label for each individual channel.

3.2.5. The detector DC supply shall be bussed to a common point and wired to the intersection detector panel.

3.2.6. The chassis ground shall be bussed to a common point and wired to the detector panel.

3.2.7. The logic ground shall be bussed to a common point and wired to the detector panel.

3.2.8. The data address for the detector channels shall be according to TS-2.

3.3. Detector Panel

3.3.1. The detector panel shall provide all connections between the detector loops and the detector amplifiers.

3.3.2. The panel shall be constructed of 0.125" (3.2mm) aluminum.

3.3.3. The panel shall contain a 3" (76mm) horizontal slot in each corner to accommodate 0.248" (6.3mm) mounting bolts.

3.3.4. All inputs from the loops shall be brought through posted 10-32 X 5/16" (7.93mm) binder screw terminals or 8-32 X 5/16" (7.93mm) binder screw terminals.

3.3.5. Each loop pair shall be protected by lightning surge suppressers approved for use on loop detector inputs by the State Traffic Signal Engineer. The suppressers may be mounted either on the front or behind the panel.

3.3.6. The detector panel for cabinet shall provide the following connection points as a minimum for 24 detectors:

Connection Point	**Number of Connection Points**
External 24V Power Supply	1
Loop Inputs	48, 2 for each Detector
Logic Ground	1
Spares	0
Chasis Ground Bus	1 Bus

3.3.7. A chassis ground bus bar shall be provided on the panel and connected to the cabinet by an insulated braided copper ground strap and shall be tied to the loop lead-in grounds. The strap shall be bonded to the cabinet.

3.3.8. An additional neutral bus bar shall be provided on the panel and tied to the pedestrian commons.

3.3.9. Toggle switches shall be provided to permit the user to test all detector channels.

3.3.10. Include slot with label for Opticom card.

4. PREEMPT/COMMUNICATION PANEL

4.1. A preempt/communication panel shall be provided that contains all interface circuits and wiring for preemption and communication functions. The panel shall be located on the left side of the cabinet interior.

4.2. Three (3) input relay circuits, with 120V AC coil and contacts rated for the application, shall be provided on the preempt panel. These circuits shall be used to isolate the incoming preempt commands from the controller unit logic circuitry. The circuits shall be programmable to operate with either a normally open or normally closed relay contact by jumpers on a terminal strip. A barrier strip protected from accidental contact by service personnel shall be supplied to connect the external input. It shall be possible to use either a neutral or hot 120V AC input. Relays used shall be plug-in Potter Brumfield K10P series/Magnecraft W-78 series or interchangeable equal. The relays shall be mounted in relay sockets.

4.3. Adequate protection of the input relay circuits as well as the preemptor circuitry shall be provided to eliminate damage or false preemption commands caused by line transients or lightning surges. The devices shall have a minimum rating of 20 Joules.

4.4. Three toggle test switches, one for each preempt circuit, shall be provided on the preempt panel. The operator shall not be exposed to hazardous voltages during operation of the test switches.

4.5. All necessary interconnection cables and mounting hardware shall be provided.

4.6. There shall be a switch on the preempt/communication panel which shall release the local controller to operate in an isolated, full-actuated manner, when necessary for maintenance purposes. The switch positions shall be labeled "System" and "Free".

4.7. Terminal connections for 2 twisted pair communication lines shall also be provided with a coordinated 4 stage electrical protection; including primary overvoltage protection, resettable over current protection, secondary clamping voltage protection, and fast

transient filtering. The secondary overvoltage stage shall allow peak voltages of no more than 250V. The fast transient filtering stage shall provide no less than 40 dB/decade of attenuation to transients above the required pass band. The 4 stage protection shall be provided in an integrated closure with input/output terminations and ground connection.

5. POWER SUPPLY

5.1. The power supply shall be a shelf-mounted, enclosed, 24V DC power supply in accordance with Clause 5.3.5 of the NEMA Standards Publication TS-2 2003, or latest revision.

5.2. One (1) power supply cable per power supply shall be furnished and installed in each cabinet. The wires shall be terminated to bus bars, terminals on the front of the back panel, detector panels, or connector as appropriate. The connections shall be with forked spade lugs or otherwise as needed. Each individual wire shall be cut to the length required to reach the point at which it is to be connected.

5.3. Electrical requirements for the power supply shall be in accordance with Clause 5.3.5 of the NEMA Standards Publication TS-2 2003 or latest revision) as stated above except that the minimum average continuous current capability shall be as shown below with DC voltages having less than 0.5 volts peak to peak ripple:

+12 VDC	5.0 Amps
+24 VDC	2.0 Amps
12 VAC	0.250 Amps

5.4. Each line outputs shall have individual fuses and line reference LED displays.

6. TWO CIRCUIT SOLID STATE FLASHER

6.1. The solid state, two-circuit flasher shall meet the electrical and physical characteristics described in Clause 6.3 of the NEMA Standards Publication TS-2 2003, or latest revision. The flasher shall be Type III (dual circuit rated at 15A per circuit) unit and so constructed that each component may be readily replaced if needed.

6.2. The two-circuit flasher shall be of solid state design and contain no electro-mechanical devices.

7. LOAD SWITCH

7.1. The solid state load switches shall meet the requirements set forth in Clause 6.2 of the NEMA Standards Publication TS-2 2003, or latest revision, and shall be "Triple-Signal Load Switch" type.

7.2. An indicator light for each circuit shall be provided in each load switch. The indicator light shall be on when a "Low Voltage Active" input to the load switch is present.

8. DOCUMENTS

8.1. Each cabinet shall come complete with the following:

8.1.1. One (1) Operation and Maintenance manual shall be provided. The operation manual must include a block diagram schematic of all system hardware components.

8.1.2. Two (2) cabinet wiring diagrams and one (1) equipment manual.

8.1.3. Detailed directions/instructions for installation, programming and maintenance of the TS-2 Traffic Signal Cabinet.

8.1.4. A complete parts list.

9. WARRANTY

9.1. A two (2) year warranty on all parts and components of the entire TS-2 Traffic Signal Cabinet must be provided by the manufacturer.

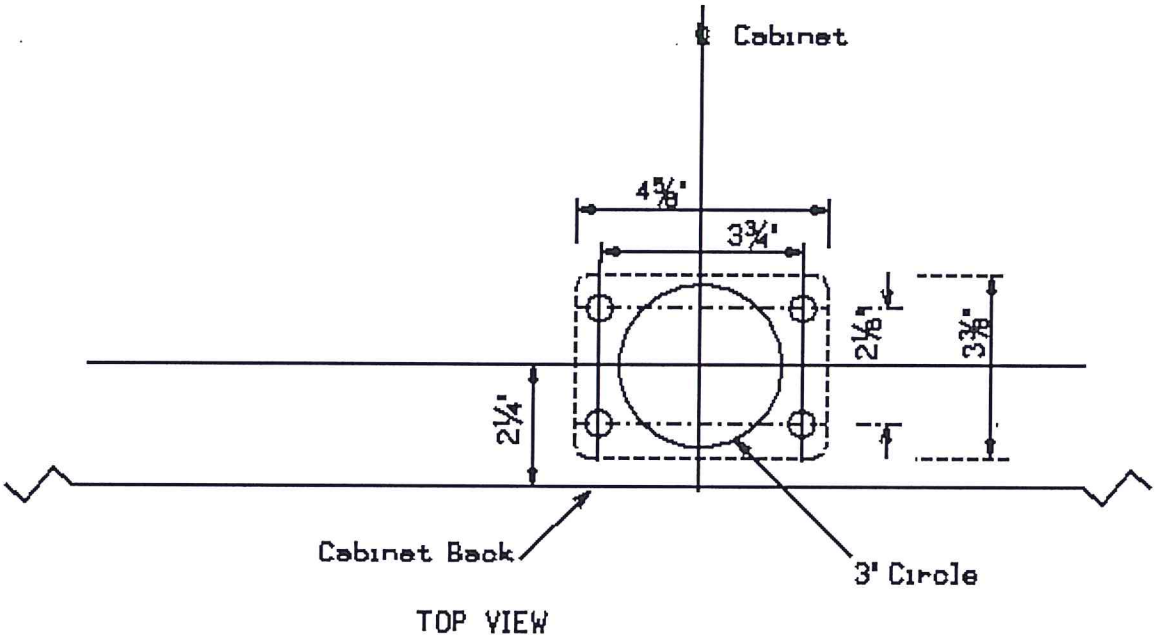

CABINET TOP

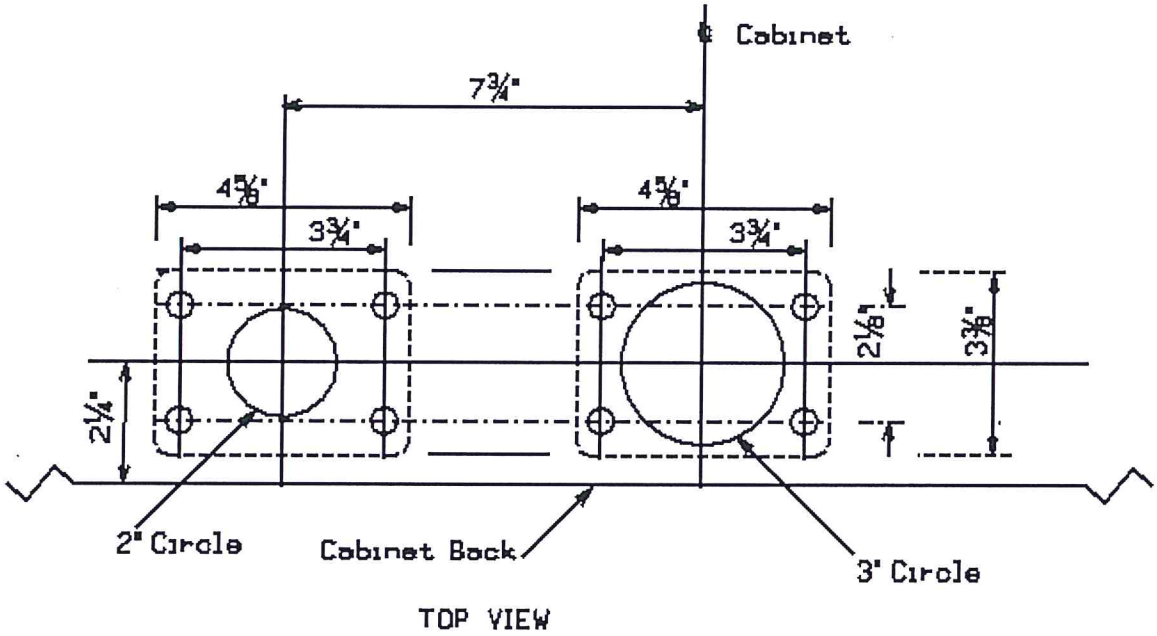

CABINET BOTTOM