UNIVERSITY OF LOUISIANA AT LAFAYETTE

Lafayette, Louisiana

BID No. - FILE 17201

PROPOSAL FOR FURNISHING

ALL LABOR, MATERIALS, EQUIPMENT, TRANSPORTATION, SUPERVISION, PERMITS, ETC. NECESSARY FOR INTRAMURAL FIELD LIGHTING, LOCATED ON THE UL LAFAYETTE CAMPUS, LAFAYETTE, LOUISIANA

NOTE: A MANDATORY pre-bid meeting will be held at 1:30 pm on Thursday, July 14, 2016 at Parker Hall, 310 East Lewis, Lafayette, LA, at which time details of the specifications will be discussed.

Proposals will be received up to 2:00PM August 2, 2016 by the Purchasing Office, University of Louisiana at Lafayette, Lafayette, Louisiana. Proposals will not be received after this specified hour and date. At this time, the proposals will be publicly opened and read in the Purchasing Office, Room 123, Martin Hall, 104 University Circle, on the University Campus.

This is a *Competitive Sealed Bid;* bids SHALL be submitted in a sealed envelope. Complete details for submitting bid, etc. are contained in the attached INSTRUCTIONS TO BIDDERS. Vendors submitting bids in the amount of $50,000.00 or more SHALL show their license number on the front of the sealed envelope in which their bid is enclosed; bids not submitted in accordance with this requirement, SHALL be rejected and shall not be read.

Bid must be received by the due date and time in the Purchasing Office at the University of Louisiana at Lafayette, 104 University Circle, Martin Hall, Room 123, Lafayette, LA, 70503. Bid is to be in a SEALED ENVELOPE with the BID NUMBER and DUE DATE ON THE OUTSIDE OF THE ENVELOPE.

All inquiries regarding this request shall be directed to:

Director of Purchasing
UL Lafayette Purchasing Dept
(337) 482-5396
purchasing@louisiana.edu

TO: **University of Louisiana at Lafayette**
Purchasing Office, Martin Hall Room 123
104 University Circle
P O Box 40197
Lafayette, LA 70504 0197
Fax – 337-482-5059

To Whom It May Concern:

Attached is the completed proposal of the firm listed below. The undersigned certifies that he/she (or they) has/have carefully examined *the Instructions to Bidders, the General Conditions, and the Specifications* hereto attached and made part herein, and agrees to comply with the instructions, conditions, and specifications, as covered by the attached papers. On the basis of the specifications, the undersigned proposes to furnish any or all items listed in the schedule of items hereto attached, upon which prices are requested, and at the price stated for each item.

Firm Name	**Signature** [By signing this bid, bidder certifies compliance with La. R.S. 38:2212(A)(1)(c) or RS 38:2212(0)]
Address	**Name (Printed)**
City, State, Zip Code	**Title**
Telephone No. including area code	**Date**
Fax No. including area code	**E-Mail**

GENERAL SPECIFICATIONS

FURNISH ALL LABOR, MATERIALS, EQUIPMENT, TRANSPORTATION, SUPERVISION, PERMITS, ETC. NECESSARY FOR INTRAMURAL FIELD LIGHTING, LOCATED ON THE UNIVERSITY OF LOUISIANA AT LAFAYETTE CAMPUS, LAFAYETTE, LOUISIANA, AS SHOWN ON THESE SPECIFICATIONS.....

SCOPE OF WORK

1) Installation of Sports Lighting, including electrical services and controls.
2) Install transformer.

DUE TO THE IMPORTANCE OF THE SCHEDULE, LIQUIDATED DAMAGES IN THE AMOUNT OF 100 DOLLARS ($100.00) PER DAY WILL BE ASSESSED FOR EVERY CALENDAR DAY THAT THIS PROJECT IS NOT COMPLETE BEYOND ONE TWENTY (120) CALENDAR DAYS OF THE NOTICE TO PROCEED.

Each bidder MUST accompany his/her proposal with a bid security for five percent (5%) of the total maximum amount of his/her bid. The bid security shall be drawn in favor of the University of Louisiana at Lafayette and SHALL be in the form of a Bid Bond (Insurance Company), Bank Money Order, Certified Check or Cashier's Check. It shall become the property of the Owner in the event the contract and any performance bond are not executed within the time set forth. Bid bond shall be written by a surety or insurance company currently on the US Department of the Treasury Financial Management Service List of Approved Bonding Companies which is published annually in the Federal Register, or by a Louisiana domiciled insurance company with at least an "A-" Rating in the latest printing of the AM Best's Key Rating Guide to write individual bonds up to ten percent (10%) of policyholders' surplus as shown in the AM Best's Key Rating Guide.

Successful bidder WILL BE required to execute and deliver within ten (10) days of notification, a satisfactory performance bond and payment bond in the amount of one hundred percent (100%) of the contract price. Performance Bond, with Power of Attorney, shall be secured by a surety or insurance company currently on the US Department of the Treasury Financial Management Service List of Approved Bonding Companies, and in accordance with restrictions set by them or by an insurance company that is either domiciled in Louisiana or owned by Louisiana residents and is licensed to write surety bonds. In addition, any surety bond written for a public works project shall be written by a surety or insurance company that is currently licensed to do business in the State of Louisiana. Also, to be provided at the same time is a Labor and Materials payment Bond in an amount equal to one hundred percent (100%) of the contract amount.

Contractors or contracting firms submitting bids in the amount of $10,000.00 or more shall show their license number on the front of the sealed envelope in which their bid is enclosed. Bids in the amount of $10,000.00 or more, not submitted in accordance with this requirement, shall be rejected and shall not be read. (Revised dollar amount according to ACT 725.) Bids shall be accepted from Contractors who are licensed under L.A. R.S. 37:2150-2163 in a classification such as: **Electrical Work**. Additional information relative to licensing may be obtained from the Louisiana State Licensing Board for Contractors, Baton Rouge, Louisiana.

In accordance with La. R.S. 38:2227, LA. R.S. 38:2212.10 and LA. R.S. 23:1726(B) each bidder on

this project must submit a completed Attestations Affidavit (Past Criminal Convictions of Bidders, Verification of Employees and Certification Regarding Unpaid Workers Compensation Insurance) form found within this bid package. The Attestations Affidavit form shall be submitted to the Purchasing Department within 10 days after the opening of bids

Delivery of any document(s) will NOT be accepted during non-business hours. Business hours are Monday through Thursday, 7:30 am to 11:45 am, 12:30 pm to 5:00 pm, and Friday, 7:30 am to 12:30 pm. The Purchasing office will be closed during Federal, State and University holidays. It is the responsibility of the prospective bidder to be aware of such closures.

In making this bid, each bidder represents that: They have read and understand the bid documents and the bid is made in accordance herewith, and the bid is based upon the specifications described in the bid documents without exception.

It is the responsibility of the prospective bidder to visit and examine jobsite, take measurements to his/her own satisfaction and determine conditions under which work is to be done. Owner will not accept responsibility for conditions which careful examination of premises would have shown existed.

To visit jobsite and for further information, prospective bidder is to contact Mr. Terry Jenkins, 337-482-2001.

A MANDATORY pre-bid meeting will be held at 1:30pm on Thursday, July 14, 2016 at the Parker Hall, 310 East Lewis, Lafayette, LA, at which time details of plans and specifications will be discussed.

For vendors unable to download and print plans, the plans are available at the UL Lafayette Facilities Management Department offices located at Parker Hall, 310 East Lewis, at a non-refundable charge of $20.00 per set. DO NOT SEND CHECKS/CASH TO PURCHASING FOR PLANS!

VENDOR CHECK LIST

REQUIRED FORMS/ITEMS UPON BID SUBMISSION

____ Louisiana Uniform Public Works Bid Form
____ Bid Security Equal to 5% of Bid
____ Louisiana Contractor's License Number (If Applicable) on Envelop Exterior

REQUIRED FORMS AFTER BID OPENING/UPON BID AWARD

____ Attestation Affidavit (ALL BIDDERS, WITHIN 10 DAYS OF BID OPENING)
____ Performance and Payment Bond (LOW BIDDER, WITHIN 10 DAYS OF REQUEST)
____ Proof of Insurance

INSTRUCTIONS TO BIDDERS

ARTICLE 1

DEFINITIONS

1.1 The Bid Documents include the following:

Advertisement for Bids
Instructions to Bidders
Bid Form
Bid Bond
General Conditions of the Contract for Construction,
AlA Document A201, 2007 Edition
Supplementary Conditions
Contract Between Owner and Contractor
and Performance and Payment Bond
Affidavit
User Agency Documents (if applicable)
Change Order Form
Partial Occupancy Form
Recommendation of Acceptance
Asbestos Abatement (if applicable)
Other Documents (if applicable)
Specifications & Drawings
Addenda issued during the bid period and
acknowledged in the Bid Form

1.2 All definitions set forth in the General Conditions of the Contract for Construction, AlA Document A201 are applicable to the Bid Documents.

1.3 Addenda are written and/or graphic instruments issued by the Owner or Architect prior to the opening of bids which modify or interpret the Bid Documents by additions, deletions, clarifications, corrections and prior approvals.

1.4 A bid is a complete and properly signed proposal to do the work or designated portion thereof for the sums stipulated therein supported by data called for by the Bid Documents.

1.5 Base bid is the sum stated in the bid for which the Bidder offers to perform the work described as the base, to which work may be added, or deleted for sums stated in alternate bids.

1.6 An alternate bid (or alternate) is an amount stated in the bid to be added to the amount of the base bid if the corresponding change in project scope or materials or methods of construction described in the Bid Documents is accepted.

1.7 A Bidder is one who submits a bid for a prime Contract with the Owner for the work described in the Bid Documents.

1.8 A Sub-bidder is one who submits a bid to a Bidder for materials and/or labor for a portion of the work.

1.9 Where the word "Architect" is used in any of the documents, it shall refer to the Prime Designer of the project, regardless of discipline.
1.10 An agent is the University's representative in Facility Management who is referred to throughout these documents as singular in number.

1.11 A Contractor is the person who contracts with UL Lafayette to perform the work as called for on these documents who is referred to as singular in number.

1.12 The Owner is The University of Louisiana at Lafayette (UL Lafayette)

ARTICLE 2

PRE-BID CONFERENCE

2.1 A Pre-Bid Conference may be held at the project site. The Architect or Owner shall coordinate the setting of the date, time and place for the Pre-Bid Conference with the Agent and shall invite in writing all who have received sets of the Bid Documents to attend. The purpose of the Pre-Bid Conference is to familiarize Bidders with the requirements of the Project and the intent of the Bid Documents, and to receive comments and information from interested Bidders. If the Pre-Bid Conference is stated in the Advertisement for Bids to be a Mandatory Pre-Bid Conference, bids shall be accepted only from those bidders who attend the Pre-Bid Conference. Contractors who are not in attendance for the **entire** Pre-Bid Conference will be considered to have not attended.

2.2 Any revision of the Bid Documents made as a result of the Pre-Bid Conference shall not be valid unless included in an addendum.

ARTICLE 3

BIDDER'S REPRESENTATION

3.1 Each Bidder by making his bid represents that:

3.1.1 He has read and understands the Bid Documents and his bid is made in accordance therewith.

3.1.2 He has visited the site and has familiarized himself with the local conditions under which the work is to be performed.

3.1.3 His bid is based solely upon the materials, systems and equipment described in the Bid Documents as advertised and as modified by addenda.

3.1.4 His bid is not based on any verbal instructions contrary to the Bid Documents and addenda.

3.1.5 He is familiar with Code of Governmental Ethics requirement that prohibits public servants and/or their immediate family members from bidding on or entering into contracts; he is aware that the Designer and its principal owners are considered Public Servants under the Code of Governmental Ethics for the limited purposes and scope of the Design Contract with the State on this Project (see Ethics Board Advisory Opinion, No. 2009-378 and 2010-128); and neither he nor any principal of the Bidder with a controlling interest therein has an immediate family relationship with the Designer or any principal within the Designer's firm. (see La. R.S. 42:1113). Any Bidder submitting a bid in violation of this clause shall be disqualified and any contract entered into in violation of this clause shall be null and void.

3.2 The Bidder must be fully qualified under any State or local licensing law for Contractors in effect at the time and at the location of the work before submitting his bid. In the State of Louisiana, Revised Statutes 37:2150, et seq. will be considered, if applicable.

The Contractor shall be responsible for determining that all of his Sub-bidders or prospective Subcontractors are duly licensed in accordance with law.

ARTICLE 4

BID DOCUMENTS

4.1 Copies

4.1.1 Bid Documents may be obtained from the University Purchasing Office as stated in the Advertisement for Bids. If deposits are required, no deposits will be refunded on Bid Documents returned later than ten days after receipt of bids.

4.1.1.1 As an alternative method of distribution, the Designer or Architect may provide the Bid Documents in electronic format. They may be obtained with or without charge as stated in the Advertisement for Bids.

4.1.2 Complete sets of Bid Documents shall be used in preparing bids; neither the Owner nor the Architect assume any responsibility for errors or misinterpretations resulting from the use of incomplete sets of Bid Documents.

4.1.3 The Owner or Architect in making copies of the Bid Documents available on the above terms, do so only for the purpose of obtaining bids on the work and do not confer a license or grant for any other use.

4.2 Interpretation or Correction of Bid Documents

4.2.1 Bidders shall promptly notify the Owner or Agent of any ambiguity, inconsistency or error which they may discover upon examination of the Bid Documents or of the site and local conditions.

4.2.2 Bidders requiring clarification or interpretation of the Bid Documents shall make a written request to the Purchasing Department to reach him at least seven days prior to the date for receipt of bids.

4.2.3 Any interpretation, correction or change of the Bid Documents will be made by addendum. Interpretations, corrections or changes of the Bid Documents made in any other manner will not be binding and Bidders shall not rely upon such interpretations, corrections and changes.

4.3 Substitutions

4.3.1 The materials, products and equipment described in the Bid Documents establish a standard of required function, dimension, appearance and quality to be met by any proposed substitution. No substitutions shall be allowed after bids are received.

4.3.2 No substitution will be considered unless written request for approval has been submitted by the Proposer and has been received by the Architect at least seven (7) working days prior to the opening of bids. (RS38:2295C) Each such request shall include the name of the material or equipment for which it is to be substituted and a complete description of the proposed substitute including model numbers, drawings, cuts, performance and test data and any other information necessary for an evaluation. A statement setting forth any changes in other materials, equipment or work that incorporation of the substitute would require shall be included. It shall be the responsibility of the proposer to include in his proposal all changes required of the Bid Documents if the proposed product is used. Prior approval is given contingent upon supplier being responsible for any costs which may be necessary to modify the space or facilities needed to accommodate the materials and equipment approved.

4.3.3 If the Architect or Owner approves any proposed substitution, such approval will be set forth in an addendum. Bidders shall not rely upon approvals made in any other manner.

4.4 Addenda

4.4.1 Addenda will be mailed or delivered to all who are known by the Owner to have received a complete set of Bid Documents.

4.4.2 Copies of addenda will be made available for inspection wherever Bid Documents are on file for that purpose. Owner utilizes the Office of State Purchasing LaPAC website for posting Bid Documents and Addenda. Bidder should check frequently for any possible addenda that may be issued.

4.4.3 Except as described herein, addenda shall not be issued within a period of seventy-two (72) hours prior to the advertised time for the opening of bids, excluding Saturdays, Sundays, and any other legal holidays. If the necessity arises of issuing an addendum modifying plans and specifications within the seventy-two (72) hour period prior to the advertised time for the opening of bids, then the opening of bids shall be extended at least seven but no more than twenty-one (21) working days, without the requirement of re-advertising. The revised time and date for the opening of bids shall be stated in the addendum.

4.4.4 Each Bidder shall ascertain from the Owner prior to submitting his bid that he has received all addenda issued, and he shall acknowledge their receipt on the Bid Form.

4.4.5 The Owner shall have the right to extend the bid date by up to (30) thirty days without the requirement of re-advertising. Any such extension shall be made by addendum issued by the Owner.

ARTICLE 5

BID PROCEDURE

5.1 Form and Style of Bids

5.1.1 Bids shall be submitted on the Louisiana Uniform Public Work Bid Form provided with the Bid Document.

5.1.2 All blanks on the Bid Form shall be filled in manually in ink or typewritten.

5.1.3 Bid sums shall be expressed in both words and figures, and in case of discrepancy between the two, the written words shall govern.

5.1.4 Any interlineation, alteration or erasure must be initialed by the signer of the bid or his authorized representative.

5.1.5 Bidders are cautioned to complete all alternates should such be required in the Bid Form. Failure to submit alternate prices will render the bid non responsive and shall cause its rejection.

5.1.6 Bidders are cautioned to complete all unit prices should such be required in the Bid Form. Unit prices represent a price proposal to do a specified quantity and quality of work. Unit prices are incorporated into the base bid but are not the sole components thereof.

5.1.7 Bidders are strongly cautioned to ensure that all blanks on the bid form are completely and accurately filled in.

5.1.8 Bidder shall make no additional stipulations on the Bid Form nor qualify his bid in any other manner.

5.1.9 The bid shall include the legal name of Bidder and shall be signed by the person or persons legally authorized to bind the Bidder to a Contract.
The authority of the signature of the person submitting the bid shall be deemed sufficient and acceptable under any of the following conditions:
(a) Signature on bid is that of any corporate officer or member of a partnership or partnership in commendam listed on most current annual report on file with Secretary of State.
(b) Signature on bid is that of authorized representative of corporation, partnership, or other legal entity and bid is accompanied by corporate resolution, certification as to the corporate principal, or other documents indicating authority.
(c) Corporation, partnership, or other legal entity has filed in the records of the Secretary of State, an affidavit, resolution or other acknowledged or authentic document indicating the names of all parties authorized to submit bids for public contracts. A bid submitted by an agency shall have a current Power of Attorney attached certifying agent's authority to bind Bidder. The name and license number on the envelope shall be the same as the entity identified on the Bid Form.

5.1.10 On any bid in excess of fifty thousand dollars ($50,000.00), the Contractor shall certify that he is licensed under R.S. 37: 2150-2173 and show his license number on the bid above his signature or his duly authorized representative.

5.2 Bid Security

5.2.1 No bid shall be considered or accepted unless the bid is accompanied by bid security in an amount of five percent (5.0%) of the base bid and all alternates.

The bid security shall be drawn in favor of the University of Louisiana at Lafayette and SHALL be in the form of a Bid Bond (Insurance Company), Bank Money Order, Certified Check or Cashier's Check. It shall become the property of the Owner in the event the contract and any performance bond are not executed within the time set forth. Bid bond shall be written by a surety or insurance company currently on the US Department of the Treasury Financial Management Service List of Approved Bonding Companies which is published annually in the Federal Register, or by a Louisiana domiciled insurance company with at least an "A-" Rating in the latest printing of the AM Best's Key Rating Guide to write individual bonds up to ten percent (10%) of policyholders' surplus as shown in the AM Best's Key Rating Guide.

Bid security furnished by the Contractor shall guarantee that the Contractor will, if awarded the work according to the terms of his proposal, enter into the Contract and furnish Performance and Payment Bonds as required by these Bid Documents, within ten (10) days after written notice that the instrument is ready for his signature.

Should the Bidder refuse to enter into such Contract or fail to furnish such bonds, the amount of the bid security shall be forfeited to the Owner as liquidated damages, not as penalty.

5.2.2 The Owner will have the right to retain the bid security of Bidders until either (a) the Contract has been executed and bonds have been furnished, or (b) the specified time has elapsed so that bids may be withdrawn, or (c) all bids have been rejected.

5.3 Submission of Bids

5.3.1 The Bid shall be sealed in an opaque envelope. The bid envelope shall be identified on the outside with the name of the project, file number, and the name, address, and license number of the Bidder.
The envelope shall contain **only one bid form** and will be received until the time specified and at the place specified in the Advertisement for Bids. It shall be the specific responsibility of the Bidder to deliver his sealed bid to the Purchasing Department at the appointed place and prior to the announced time for the opening of bids. Late delivery of a bid for any reason, including late delivery by United States Mail, or express delivery, shall disqualify the bid.

If the bid is sent by mail, the sealed envelope shall be enclosed in a separate mailing envelope with the notation

"Bid Enclosed" on the face thereof. Such bids shall be sent by Registered or Certified Mail, Return Receipt Requested, addressed to:

University of Louisiana at Lafayette
Purchasing Department,
P. 0. Box 40197
Lafayette, LA 70504.

Bids sent by express delivery shall be delivered to:

University of Louisiana at Lafayette
Purchasing Department
Martin Hall, Room 123
104 University Circle
Lafayette, LA 70503

5.3.2 Bids shall be deposited at the designated location prior to the time on the date for receipt of bids indicated in the Advertisement for Bids, or any extension thereof made by addendum. Bids received after the time and date for receipt of bids will be returned unopened.

5.3.3 Bidder shall assume full responsibility for timely delivery at location designated for receipt of bids.

5.3.4 Oral, telephonic or telegraphic bids are invalid and shall not receive consideration. Owner shall not consider notations written on outside of bid envelope which have the effect of amending the bid. Written modifications enclosed in the bid envelope, and signed or initialed by the Contractor or his representative, shall be accepted.

5.4 Modification or Withdrawal of Bid

5.4.1 A bid may not be modified, withdrawn or canceled by the Bidder during the time stipulated in the Bid Document, for the period following the time and bid date designated for the receipt of bids, and Bidder so agrees in submitting his bid, except in accordance with R.S. 38:2214 which states, in part, "Bids containing patently obvious mechanical, clerical or mathematical errors may be withdrawn by the Contractor if clear and convincing sworn, written evidence of such errors is furnished to the public entity within forty eight hours of the Bid Opening excluding Saturdays, Sundays and legal holidays".

5.4.2 Prior to the time and date designated for receipt of bids, bids submitted early may be modified or withdrawn only by notice to the party receiving bids at the place and prior to the time designated for receipt of bids.

5.4.3 Withdrawn bids may be resubmitted up to the time designated for the receipt of bids provided that they are then fully in conformance with these Instructions to Bidders.

5.4.4 Bid Security shall be in an amount sufficient for the bid as modified or resubmitted.

ARTICLE 6

CONSIDERATION OF BIDS

6.1 Opening of Bids

6.1.1 The properly identified Bids received on time will be opened publicly and will be read aloud, and a tabulation abstract of the amounts of the base bids and alternates, if any, will be made available to Bidders.

6.2 Rejection of Bids

6.2.1 The Owner shall have the right to reject any or all bids and in particular to reject a bid not accompanied by any required bid security or data required by the Bid Documents or a bid in any way incomplete or irregular.

6.3 Acceptance of Bid

6.3.2 It is the intent of the Owner, if he accepts any alternates, to accept them in the order in which they are listed in the Bid Form. Determination of the Low Bidder shall be on the basis of the sum of the base bid and the alternates accepted. However, the Owner shall reserve the right to accept alternates in any order which does not affect determination of the Low Bidder.

ARTICLE 7

BID INFORMATION

7.1 Submissions
7.1.1 At the Pre-Construction Conference, the Contractor shall submit the following information to the Architect. (If Applicable)

7.1.1.1 A designation of the work to be performed by the Contractor with his own forces.

7.1.1.2 A breakdown of the Contract cost attributable to each item listed in the Schedule of Values Form (attached). No payments will be made to the Contractor until this is received.

7.1.1.3 The proprietary names and the suppliers of principal items or systems of material and equipment proposed for the work.

7.1.1.4 A list of names and business domiciles of all Subcontractors, manufacturers, suppliers or other persons or organizations (including those who are to furnish materials or equipment fabricated to a special design) proposed for the principal portions of the work. It is the preference of the Owner that, to the greatest extent possible or practical, the Contractor utilize Louisiana Subcontractors, manufacturers, suppliers and labor.

7.1.2 The Contractor will be required to establish to the satisfaction of the Architect the reliability and responsibility of the proposed Subcontractors to furnish and perform the work described in the sections of the Specifications pertaining to such proposed Subcontractor's respective trades. The General Contractor shall be responsible for actions or inactions of Subcontractors and/or material suppliers.

The General Contractor is totally responsible for any lost time or extra expense incurred due to a Subcontractor's/or Material Supplier's failure to perform. Failure to perform includes, but is not limited to, a Subcontractor's financial failure, abandonment of the project, failure to make prompt delivery, or failure to do work up to standard. Under no circumstances shall the Owner mitigate the General Contractor's losses or reimburse the General Contractor for losses caused by these events.

7.1.3 Subcontractors and other persons and organizations selected by the Bidder must be used on the work for which they were proposed and shall not be changed except with the written approval of the Owner and the Architect.

7.1.4 In accordance with La. R.S. 38:2227, LA. R.S. 38:2212.10 and LA. R.S. 23:1726(B) each bidder on this project must submit a completed Attestations Affidavit (Past Criminal Convictions of Bidders, Verification of Employees and Certification Regarding Unpaid Workers Compensation Insurance) form found within this bid package. The Attestations Affidavit form shall be submitted to the Purchasing Department within 10 days **after** the opening of bids**.**

ARTICLE 8

PERFORMANCE AND PAYMENT BOND

8.1 Bond Required

8.1.1 The Contractor shall furnish and pay for a Performance and Payment Bond written by a company licensed to do business in Louisiana, which shall be signed by the surety's agent or attorney-in-fact, in an amount equal to 100% of the Contract amount. Surety must be listed currently on the U. S. Department of Treasury Financial Management Service List (Treasury List) as approved for an amount equal to or greater than the contract amount, or must be an insurance company domiciled in Louisiana or owned by Louisiana residents. If surety is qualified other than by listing on the Treasury list, the contract amount may not exceed fifteen percent of policyholders' surplus as shown by surety's most recent financial statements filed with the Louisiana Department of Insurance and may not exceed the amount of $500,000. However, a Louisiana domiciled insurance company with at least an A- rating in the latest printing of the A. M. Best's Key Rating Guide shall not be subject to the $500,000 limitation, provided that the contract amount does not exceed ten percent of policyholders' surplus as shown in the latest A. M. Best's Key Rating Guide nor fifteen percent of policyholders' surplus as shown by surety's most recent financial statements filed with the Louisiana Department of Insurance. The Bond shall be signed by the surety's agent or attorney-in-fact. The Bond shall be in favor of the State of Louisiana, Office of Facility Planning and Control.

8.2 Time of Delivery and Form of Bond

8.2.1 The Bidder shall deliver the required bond to the Owner simultaneous with the execution of the Contract.

8.2.2 The Bidder shall require the Attorney-in-Fact who executes the required bond on behalf of the surety to affix thereto a certified and current copy of his power of Attorney.

ARTICLE 9

PAYMENTS AND COMPLETION

9.2 SCHEDULE OF VALUES

Delete Subparagraph 9.2 and substitute the following:

9.2 At the Pre-Construction Conference, the Contractor shall submit to the Owner and the Architect a Schedule of Values prepared as follows:

9.2.1 The attached Schedule of Values Format shall be used. If applicable, the cost of Work for each section listed under each division, shall be given. The cost for each section shall include Labor, Materials, Overhead and Profit.

9.2.2 The Total of all items shall equal the Total Contract Sum. This schedule, when approved by the Architect, shall be used as a basis for the Contractor's Applications for Payment and it may be used for determining the cost of the Work in deductive change orders, when a specific item of Work listed on the Schedule of Values is to be removed. Once the Schedule of Values is submitted at the Pre-Construction Conference, the schedule may not be modified without approval from the Owner and Architect.

9.3 APPLICATIONS FOR PAYMENT

Delete Subparagraph 9.3.1 and clause 9.3.1.1 and 9.3.1.2 and substitute the following:

9.3.1 Monthly, the Contractor shall submit to the Architect an Application & Certificate for Payment on the AIA Document G702-1992, accompanied by AIA Document G703-1992, and supported by any additional data substantiating the Contractor's right to payment as the Owner or the Architect may require. Application for Payment shall be submitted on or about the first of each month for the value of labor and materials incorporated into the Work and of materials, suitably stored, at the site as of the twenty-fifth day of the preceding month, less normal retainage as follows, per R.S. 38:2248:

9.3.1.1 Projects with Contract price up to $500,000.00 – 10% of the Contract price.

9.3.1.2 Projects with Contract price of $500,000.00, or more – 5% of the Contract price.

9.3.1.3 No payment will be made until the revised schedule required by Section 3.10.1 is received.

The normal retainage shall not be due the Contractor until after substantial completion and expiration of the forty-five day lien period and submission to the Architect of a clear lien certificate, consent of surety and invoice for retainage.

Delete Subparagraph 9.3.2 and substitute the following:

9.3.2 Unless otherwise provided in the Contract Documents, payments shall be made on account of materials and equipment delivered and suitably stored at the site for subsequent incorporation in the Work. Payments for materials or equipment stored on the site shall be conditioned upon submission by the Contractor of bills of sale or such other procedures satisfactory to the Owner to establish the Owner's title to such materials and equipment or otherwise protect the Owner's interest, including applicable insurance.

9.5 DECISIONS TO WITHHOLD CERTIFICATION

Subparagraph 9.5.1.7: Delete the word "repeated".

Delete Subparagraph 9.5.3

9.6 PROGRESS PAYMENTS

Delete Subparagraph 9.6.1 and substitute the following:

9.6.1 After the Architect has issued a Certificate for Payment, the Owner shall make payment within twenty days except for projects funded fully or in part by a Federal reimbursement program. For such projects the Owner will make payment in a timely

manner consistent with reimbursement.

9.6.2 Delete the phrase: "no later than seven days" from the first sentence.

After the end of the second sentence, add the following:

R.S. 9:2784 (A) and (C) require a Contractor or Subcontractor to make payment due to each Subcontractor and supplier within fourteen (14) consecutive days of the receipt of payment from the Owner. If not paid, a penalty in the amount of ½ of 1% per day is due, up to a maximum of 15% from the expiration date until paid. The contractor or subcontractor, whichever is applicable, is solely responsible for payment of a penalty.

9.6.4 Delete the first two sentences of Subparagraph 9.6.4 and add the following to the end of the Subparagraph:

Pursuant to La. R.S. 38:2242, when the Owner receives any claim of nonpayment arising out of the Contract, the Owner shall deduct 125% of such claim from the Contract Sum. The Contractor, or any interested party, may deposit security, in accordance with La. R.S. 38:2242.2, guaranteeing payment of the claim with the recorder of mortgages of the parish where the Work has been done. When the Owner receives original proof of such guarantee from the recorder of mortgages, the claim deduction will be added back to the Contract Sum.

9.7 FAILURE OF PAYMENT

Delete Subparagraph 9.7

9.8 SUBSTANTIAL COMPLETION: Delete this section and substitute the following:

9.8 SUBSTANTIAL COMPLETION

9.8.1 Substantial Completion is the stage in the progress of the Work when the Work is sufficiently complete in accordance with the Contract Documents so that the Owner can occupy or utilize the Work for its intended use. The Architect shall determine if the project is substantially complete in accordance with this Subparagraph.

9.8.2 When the Contractor considers that the Work is Substantially Complete, the Contractor shall prepare and submit to the Architect a comprehensive list of items to be completed or corrected prior to final payment. Failure to include an item on such list does not alter the responsibility of the Contractor to complete all Work in accordance with the Contract Documents.

9.8.3 Upon receipt of the Contractor's list, the Architect will make an inspection to determine whether the Work is substantially complete. A prerequisite to the Work being considered as substantially complete is the Owner's receipt of the executed Roofing Contractor's and Roofing Manufacturer's guarantees, where roofing Work is part of the Contract. Prior to inspection by the Architect, the Contractor shall notify the Architect that the project is ready for inspection by the State Fire Marshal's office. If the

Architect's inspection discloses any item, whether or not included on the Contractor's list, which is not sufficiently complete in accordance with the Contract Documents so that the Owner can occupy or utilize the Work for its intended use, the Contractor shall, before the Work can be considered as Substantially Complete, complete or correct such item upon notification by the Architect. In such case, the Contractor shall then submit a request for another inspection by the Architect to determine Substantial Completion.

9.8.4 When the Architect determines that the project is Substantially Complete, he shall prepare a punch list of exceptions and the dollar value related thereto. The monetary value assigned to this list will be the sum of the cost estimate for each particular item of Work the Architect develops based on the mobilization, labor, material and equipment costs of correcting the item and shall be retained from the monies owed the contractor, above and beyond the standard lien retainage. The cost of these items shall be prepared in the same format as the schedule of values. At the end of the 45 day lien period payment shall be approved for all punch list items completed up to that time. After that payment, none of the remaining funds shall be due the contractor until all punch list items are completed and are accepted by the Architect. If the dollar value of the punch list exceeds the amount of funds, less the retainage amount, in the remaining balance of the Contract, then the Project shall not be considered as substantially complete. If funds remaining are less than that required to complete the Work, the Contractor shall pay the difference.

9.8.5 When the preparation of the punch list is complete the Architect shall prepare a Recommendation of Acceptance incorporating the punch list and submit it to the Owner. Upon approval of the Recommendation of Acceptance, the Owner may issue a Notice of Acceptance of Building Contract which shall establish the Date of Substantial Completion. The Notice of Acceptance will be recorded with the Clerk of Court in the Parish in which the Work has been performed. If the Notice of Acceptance has not been recorded seven (7) days after issuance, the Owner may record the Acceptance at the Contractor's expense. All additive change orders must be processed before issuance of the Recommendation of Acceptance. The Owner will not be responsible for payment for any Work associated with change orders that is not incorporated into the contract at the time of the Recommendation of Acceptance.

9.8.6 Warranties required by the Contract Documents shall commence on the date of Acceptance of the Work unless otherwise agreed to in writing by the Owner and Contractor. Unless otherwise agreed to in writing by the Owner and Contractor, security, maintenance, heat, utilities, damage to the Work not covered by the punch list and insurance shall become the Owner's responsibility on the Date of Substantial Completion.

9.8.7 If all punch list items have not been completed by the end of the forty-five (45) day lien period, through no fault of the Architect or Owner, the Owner may hold the Contractor in default. If the Owner finds the Contractor is in default, the Surety shall be notified. If within forty-five (45) days after notification, the Surety has not completed the punch list, through no fault of the Architect or Owner, the Owner may, at his option, contract to have the balance of the Work completed and pay for such Work with the unpaid funds remaining in the Contract sum. Finding the Contractor in default shall constitute a reason for disqualification of the Contractor from bidding on future state

contracts. If the surety fails to complete the punch list within the stipulated time period, the Owner may not accept bonds submitted, in the future, by the surety.

9.9 PARTIAL OCCUPANCY OR USE

9.9.1 Delete paragraph and substitute the following:

Partial Occupancy is that stage in the progress of the Work when a designated portion of the Work is sufficiently complete in accordance with the Contract Documents so the Owner can occupy or utilize the designated portion of the Work for its intended use. The Owner may occupy or use any substantially completed portion of the Work so designated by separate agreement with the Contractor and authorized by public authorities having jurisdiction over the Work. Such occupancy or use may commence provided the Owner and Contractor have accepted in writing the responsibilities assigned to each of them for payments, if any, security, maintenance, heat, utilities, damage to the Work and insurance, and have agreed in writing concerning the period for correction of the Work and commencement of warranties required by the Contract Documents. When the Contractor considers the designated portion substantially complete the Contract shall prepare and submit a list to the Architect as provided under Subparagraph 9.8.2. Consent of the Contractor to partial occupancy or use shall not be unreasonable withheld.

9.10 FINAL COMPLETION AND FINAL PAYMENT

9.10.1 After the first sentence, add the following:

If the Architect does not find the Work acceptable under the Contract Documents, the Architect shall make one additional inspection; if the Work is still not acceptable, the Architect, and each of the Architect's principal consultants, shall be paid $175.00/hour for their time at the project site, for each additional inspection, to be withheld from the unpaid funds remaining in the Contract sum. The payment shall be made by the Owner and deducted from the construction contract funds.

9.10.4 Replace with the following:

The making of final payment shall not constitute a waiver of claims by the Owner for the following:

9.10.4.1 Claims, security interests or encumbrances arising out of the Contract and unsettled;

9.10.4.2 Failure of the Work to comply with the requirements of the Contract Documents irrespective of when such failure is discovered; or

9.10.4.3 Terms of special warranties required by the Contract Documents.

ARTICLE 10

PROTECTION OF PERSONS AND PROPERTY

10.2 SAFETY OF PERSONS AND PROPERTY

10.2.2 In the first sentence, between the words: "bearing on and safety", add the words: "the health and,"

10.3 HAZARDOUS MATERIALS

10.3.1 In the first sentence after (PCB) add: "or lead"

10.3.2 After the first sentence, delete all remaining sentences.

Add at the end: "The Contract time shall be extended appropriately."

10.4 EMERGENCIES

Delete Subparagraph 10.4 and substitute the following:

10.4 In an emergency affecting the safety of persons or property, the Contractor shall notify the Owner and Architect immediately of the emergency, simultaneously acting at his discretion to prevent damage, injury or loss. Any additional compensation or extension of time claimed by the Contractor on account of emergency Work shall be determined as provided in Article 15 and Article 7.

ARTICLE 11

INSURANCE AND BONDS

Delete all of Paragraphs 11.1, 11.2 and 11.3 and substitute the following:

INSURANCE REQUIREMENTS FOR NEW CONSTRUCTION, ADDITIONS AND RENOVATIONS

11.1 The Contractor shall purchase and maintain without interruption for the duration of the contract insurance against claims for injuries to persons or damages to property which may arise from or in connection with the performance of the Work hereunder by the Contractor, its agents, representatives, employees or subcontractors. The duration of the contract shall be from the inception of the contract until the date of final payment.

11.2 MINIMUM SCOPE AND LIMITS OF INSURANCE

11.2.1 Worker's Compensation

Worker's Compensation insurance shall be in compliance with the Worker's Compensation law of the State of Louisiana. Employers Liability is included with a minimum limit of $500,000 per accident/per disease/per employee. If Work is to be

performed over water and involves maritime exposure, applicable LHWCA, Jones Act or other maritime law coverage shall be included and the Employers Liability limit increased to a minimum of $1,000,000. A.M. Best's insurance company rating requirement may be waived for Worker's compensation coverage only.

11.2.2 Commercial General Liability

Commercial General Liability insurance, including Personal and Advertising Injury Liability and Products and Completed Operations Liability, shall have a minimum limit per occurrence based on the project value. The Insurance Services Office (ISO) Commercial General Liability occurrence coverage form CG 00 01 (current form approved for use in Louisiana), or equivalent, is to be used in the policy. Claims-made form is unacceptable.

The aggregate loss limit must apply to each project. ISO form CG 25 03 (current form approved for use in Louisiana), or equivalent, shall also be submitted. The State project number, including part number, and project name shall be included on this endorsement.

COMBINED SINGLE LIMIT (CSL) PER OCCURRENCE

Type of Construction	**Projects up to $1,000,000**	**Projects over $1,000,000 up to $10,000,000**	**Projects over $10,000,000**
New Buildings:			
Each Occurrence Minimum Limit	$1,000,000	$2,000,000	$4,000,000
Per Project Aggregate	$2,000,000	$4,000,000	$8,000,000

Renovations: The building(s) value for the Project will be released when applicable.

Each Occurrence Minimum Limit	$1,000,000**	$2,000,000**	$4,000,000**
Per Project Aggregate	2 times per occur limit**	2 times per occur limit**	2 times per occur limit**

**While the minimum Combined Single Limit of $1,000,000 is required for any renovation, the limit is calculated by taking 10% of the building value and rounding it to the nearest $1,000,000 to get the insurance limit. Example: Renovation on a $33,000,000 building would have a calculated $3,000,000 combined single limit of coverage (33,000,000 times .10 = 3,300,000 and then rounding down to $3,000,000). If the calculated limit is less than the minimum limit listed in the above chart, then the

amount needed is the minimum listed in the chart. Maximum per occurrence limit required is $10,000,000 regardless of building value. The per project aggregate limit is then calculated as twice the per occurrence limit.

11.2.3 Automobile Liability

Automobile Liability Insurance shall have a minimum combined single limit per occurrence of $1,000,000. ISO form number CA 00 01 (current form approved for use in Louisiana), or equivalent, is to be used in the policy. This insurance shall include third-party bodily injury and property damage liability for owned, hired and non-owned automobiles.

11.2.4 Excess Umbrella

Excess Umbrella Insurance may be used to meet the minimum requirements for General Liability and Automobile Liability only.

11.2.5 Builder's Risk

Builder's Risk Insurance shall be in an amount equal to the greater of the fully-completed project value or the amount of the construction contract including any amendments and shall be upon the entire Work included in the contract. The policy shall provide coverage equivalent to the ISO form number CP 10 20, Broad Form Causes of Loss (extended, if necessary, to include the perils of wind, earthquake, collapse, vandalism/malicious mischief, and theft, including theft of materials whether or not attached to any structure). The policy must include architects' and engineers' fees necessary to provide plans, specifications and supervision of Work for the repair and/or replacement of property damage caused by a covered peril, not to exceed 10% of the cost of the repair and/or replacement.

Flood coverage shall be provided by the Contractor on the first floor and below for projects North of the Interstate Corridor beginning at the Texas – Louisiana border at Interstate 10 East to the Baton Rouge junction of Interstate 12, East to Slidell junction with Interstate 10 to the Louisiana – Mississippi border. If flood is included in the builder's risk insurance policy, then the sub-limit shall not be less than ten percent (10%) of the total contract cost per occurrence. If flood is purchased as a separate policy, the limit shall be ten percent (10%) of the total contract cost per occurrence (with a max of $500,000 if NFIP). Coverage for roofing projects shall **not** require flood coverage.

On projects South of this corridor, flood coverage shall be provided by the State of Louisiana as the Owner. The Contractor will be liable for the $5,000 policy deductible from the Notice to Proceed date through the date of final payment of the project in the event of a flood loss.

A Specialty Contractor may provide an installation floater in lieu of a Builder's Risk policy, with the similar coverage as the Builder's Risk policy, upon the system to be installed in an amount equal to the greater of the fully-completed project value or the amount of the contract including any amendments. Flood coverage is not required.

The policy must include coverage for the Owner, Contractor and any subcontractors as their interests may appear.

11.2.6 Pollution Liability *(required when asbestos or other hazardous material abatement is included in the contract)*

Pollution Liability insurance, including gradual release as well as sudden and accidental, shall have a minimum limit of not less than $1,000,000 per claim. A claims-made form will be acceptable. A policy period inception date of no later than the first day of anticipated Work under this contract and an expiration date of no earlier than 30 days after anticipated completion of all Work under the contract shall be provided. There shall be an extended reporting period of at least 24 months, with full reinstatement of limits, from the expiration date of the policy. The policy shall not be cancelled for any reason, except non-payment of premium.

11.2.7 Deductibles and Self-Insured Retentions

Any deductibles or self-insured retentions must be declared to and accepted by the Owner. The Contractor shall be responsible for all deductibles and self-insured retentions.

11.3 OTHER INSURANCE PROVISIONS

11.3.1 The policies are to contain, or be endorsed to contain, the following provisions:

11.3.1.1 Worker's Compensation and Employers Liability Coverage

11.3.1.1.1 The insurer shall agree to waive all rights of subrogation against the Owner, its officers, agents, employees and volunteers for losses arising from Work performed by the Contractor for the Owner.

11.3.1.2 General Liability Coverage

11.3.1.2.1 The Owner, its officers, agents, employees and volunteers are to be added as additional insured's as respects liability arising out of activities performed by or on behalf of the Contractor; products and completed operations of the Contractor, premises owned, occupied or used by the Contractor. ISO Form CG 20 10 (current form approved for use in Louisiana), or equivalent, is to be used.

11.3.1.2.2 The Contractor's insurance shall be primary as respects the Owner, its officers, agents, employees and volunteers. The coverage shall contain no special limitations on the scope of protection afforded to the Owner, its officers, officials, employees or volunteers. Any insurance or self-insurance maintained by the Owner shall be excess and non-contributory of the Contractor's insurance.

11.3.1.2.3 The Contractor's insurance shall apply separately to each insured against whom claim is made or suit is brought, except with respect to the policy

limits.

11.3.1.3 Builder's Risk

The policy must include an endorsement providing the following:

In the event of a disagreement regarding a loss covered by this policy which may also be covered by a State of Louisiana self-insurance or commercial property policy through the Office of Risk Management (ORM), Contractor and its insurer agree to follow the following procedure to establish coverage and/or the amount of loss:

Any party to a loss may make written demand for an appraisal of the matter in disagreement. Within 20 days of receipt of written demand, the Contractor's insurer and either ORM or its commercial insurance company shall each select a competent and impartial appraiser and notify the other of the appraiser selected. The two appraisers will select a competent and impartial umpire. The appraisers will then identify the policy or policies under which the loss is insured and, if necessary, state separately the value of the property and the amount of the loss that must be borne by each policy. If the two appraisers fail to agree, they shall submit their differences to the umpire. A written decision by any two shall determine the policy or policies and the amount of the loss. Each insurance company agrees that the decision of the appraisers and the umpire if involved will be binding and final and that neither party will resort to litigation. Each of the two parties shall pay its chosen appraiser and bear the cost of the umpire equally.

11.3.1.4 All Coverages

11.3.1.4.1 Coverage shall not be canceled, suspended, or voided by either party (the Contractor or the insurer) or reduced in coverage or in limits except after 30 days written notice has been given to the Owner. Ten-day written notice of cancellation is acceptable for non-payment of premium. Notifications shall comply with the standard cancellation provisions in the Contractor's policy.

11.3.1.4.2 Neither the acceptance of the completed Work nor the payment thereof shall release the Contractor from the obligations of the insurance requirements or indemnification agreement.

11.3.1.4.3 The insurance companies issuing the policies shall have no recourse against the Owner for payment of premiums or for assessments under any form of the policies.

11.3.1.4.4 Any failure of the Contractor to comply with reporting provisions of the policy shall not affect coverage provided to the Owner, its officers, agents, employees and volunteers.

11.3.2 ACCEPTABILITY OF INSURERS

All required insurance shall be provided by a company or companies lawfully authorized to do business in the jurisdiction in which the Project is located. Insurance shall be placed with insurers with an A.M. Best's rating of **A-:VI or higher**. This rating requirement may be waived for Worker's compensation coverage only.

If at any time an insurer issuing any such policy does not meet the minimum A.M. Best rating, the Contractor shall obtain a policy with an insurer that meets the A.M. Best rating and shall submit another certificate of insurance as required in the contract.

11.3.3 VERIFICATION OF COVERAGE

Contractor shall furnish the Owner with Certificates of Insurance reflecting proof of required coverage. The Certificates for each insurance policy are to be signed by a person authorized by that insurer to bind coverage on its behalf. The Certificates are to be received and approved by the Owner before Work commences and upon any contract renewal thereafter. The Certificate Holder must be listed as follows:

State of Louisiana
Name of Owner
Owner Address
City, State, Zip
Attn: Project # _____

In addition to the Certificates, Contractor shall submit the declarations page and the cancellation provision endorsement for each insurance policy. The Owner reserves the right to request complete certified copies of all required insurance policies at any time.

Upon failure of the Contractor to furnish, deliver and maintain such insurance as above provided, this contract, at the election of the Owner, may be suspended, discontinued or terminated. Failure of the Contractor to purchase and/or maintain any required insurance shall not relieve the Contractor from any liability or indemnification under the contract.

If the Contractor does not meet the insurance requirements at policy renewal, at the option of the Owner, payment to the Contractor may be withheld until the requirements have been met, OR the Owner may pay the renewal premium and withhold such payment from any monies due the Contractor, OR the contract may be suspended or terminated for cause.

11.3.4 SUBCONTRACTORS

Contractor shall include all subcontractors as insureds under its policies OR shall be responsible for verifying and maintaining the certificates provided by each subcontractor. Subcontractors shall be subject to all of the requirements stated herein.

The Owner reserves the right to request copies of subcontractor's certificates at any time.

If Contractor does not verify subcontractors' insurance as described above, Owner has the right to withhold payments to the Contractor until the requirements have been met.

11.3.5 WORKER'S COMPENSATION INDEMNITY

In the event Contractor is not required to provide or elects not to provide Worker's compensation coverage, the parties hereby agree the Contractor, its Owners, agents and employees will have no cause of action against, and will not assert a claim against, the State of Louisiana, its departments, agencies, agents and employees as an employer, whether pursuant to the Louisiana Worker's Compensation Act or otherwise, under any circumstance. The parties also hereby agree that the State of Louisiana, its departments, agencies, agents and employees shall in no circumstance be, or considered as, the employer or statutory employer of Contractor, its Owners, agents and employees. The parties further agree that Contractor is a wholly independent Contractor and is exclusively responsible for its employees, Owners, and agents. Contractor hereby agrees to protect, defend, indemnify and hold the State of Louisiana, its departments, agencies, agents and employees harmless from any such assertion or claim that may arise from the performance of this contract.

11.3.6 INDEMNIFICATION/HOLD HARMLESS AGREEMENT

Contractor agrees to protect, defend, indemnify, save, and hold harmless, the State of Louisiana, all State Departments, Agencies, Boards and Commissions, its officers, agents, servants, employees and volunteers, from and against any and all claims, damages, expenses and liability arising out of injury or death to any person or the damage, loss or destruction of any property which may occur, or in any way grow out of, any act or omission of Contractor, its agents, servants and employees, or any and all costs, expenses and/or attorney fees incurred by Contractor as a result of any claims, demands, suits or causes of action, except those claims, demands, suits or causes of action arising out of the negligence of the State of Louisiana, all State Departments, Agencies, Boards, Commissions, its officers, agents, servants, employees and volunteers.

Contractor agrees to investigate, handle, respond to, provide defense for and defend any such claims, demands, suits or causes of action at its sole expense and agrees to bear all other costs and expenses related thereto, even if the claims, demands, suits, or causes of action are groundless, false or fraudulent.

11.4 PERFORMANCE AND PAYMENT BOND

Add the following Subparagraph 11.4.3:

11.4.3 RECORDATION OF CONTRACT AND BOND [38:2241A(2)]

The Owner shall record within thirty (30) days the Contract Between Owner and Contractor and Performance and Payment Bond with the Clerk of

Court in the Parish in which the Work is to be performed.

ARTICLE 12

UNCOVERING AND CORRECTION OF WORK

12.2.1 BEFORE OR AFTER SUBSTANTIAL COMPLETION

At the end of the paragraph, add the following sentences: "If the Contractor fails to correct Work identified as defective within a thirty (30) day period, through no fault of the Designer, the Owner may hold the Contractor in default. If the Owner finds the Contractor in default, the Surety shall be notified. If within thirty (30) days after notification, the Surety has not corrected the nonconforming Work, through no fault of the Architect or Owner, the Owner may contract to have nonconforming Work corrected and hold the Surety and Contractor responsible for the cost, including architectural fees and other indirect costs. If the Surety fails to correct the Work within the stipulated time period and fails to meet its obligation to pay the costs, the Owner may elect not to accept bonds submitted in the future by the Surety. Finding the Contractor in default shall constitute a reason for disqualification of the Contractor from bidding on future state contracts.

12.2.2 AFTER SUBSTANTIAL COMPLETION

12.2.2.1 At the end of the paragraph delete the last sentence and add the following sentences: If the Contractor fails to correct nonconforming Work within a thirty (30) day period, through no fault of the Architect or Owner, the Owner may hold the Contractor in default. If the Owner finds the Contractor is in default, the Surety shall be notified. If within thirty (30) days after notification, the Surety has not corrected the nonconforming Work, through no fault of the Architect or Owner, the Owner may contract to have the nonconforming Work corrected and hold the Surety responsible for the cost including architects fees and other indirect costs. Corrections by the Owner shall be in accordance with Section 2.4. If the Surety fails to correct the nonconforming Work within the stipulated time period and fails to meet its obligation to pay the costs, the Owner may not accept bonds submitted, in the future, by the Surety.

12.2.2.1 At the end of the paragraph delete the last sentence and add the following sentences: If the Contractor fails to correct Work covered by warranties within a thirty (30) day period, through no fault of the Architect or Owner, the Owner may hold the Contractor in default. If the Owner finds the Contractor is in default, the Surety shall be notified. If within thirty (30) days after notification, the Surety has not corrected the warranty Work, through no fault of the Architect or Owner, the Owner may contract to have the warranty Work corrected and hold the Surety responsible for the cost including architects fees and other indirect costs. Corrections by the Owner shall be in accordance with Section 2.4. If the Surety fails to correct the warranty Work within the stipulated time period and fails to meet its obligation to pay the costs, the Owner may not accept bonds submitted, in the future, by the Surety.

ARTICLE 13

MISCELLANEOUS PROVISIONS

13.1 GOVERNING LAW

Delete all after the word "located".

13.2 SUCCESSORS AND ASSIGNS

13.2.1 In the second sentence, delete "Except as … 13.2.2"

Delete paragraph 13.2.2

13.4 RIGHTS AND REMEDIES

Add the following clause 13.4.3

13.4.3 The Nineteenth Judicial Court in and for the Parish of East Baton Rouge, State of Louisiana shall have sole jurisdiction and venue in any action brought under this contract.

13.5 TESTS AND INSPECTIONS

In Subparagraph 13.5.1, delete the second sentence and substitute the following:

The Contractor shall make arrangements for such tests, inspections and approvals with the Testing Laboratory provided by the Owner, and the Owner shall bear all related costs of tests, inspections and approvals.

Delete the last sentence of Subparagraph 13.5.1

13.6 INTEREST

Delete Paragraph 13.6

13.7 TIME LIMITS ON CLAIMS

Delete Paragraph 13.7 (See L.R.S. 38:2189).

ARTICLE 14

TERMINATION OR SUSPENSION OF THE CONTRACT

14.1 TERMINATION BY THE CONTRACTOR

Delete clause 14.1.1.4

In Subparagraph 14.1.3, after the word "profit" add the following: "for Work completed

prior to stoppage".

14.2 TERMINATION BY THE OWNER FOR CAUSE

Add the following clause:

14.2.1.5 Failure to complete the punch list within the lien period as provided in 9.8.7.

14.2.3 Add the following sentence:

Termination by the Owner shall not suspend assessment of liquidated damages against the Surety.

14.2.5 Add the following Subparagraph:

If an agreed sum of liquidated damages has been established, termination by the Owner under this Article will not relieve the Contractor and/or surety of his obligations under the liquidated damages provisions and the Contractor and/or surety shall be liable to the Owner for per diem liquidated damages.

ARTICLE 15

CLAIMS AND DISPUTES

15.1 CLAIMS

In the first sentence of Subparagraph 15.1.1, after the word "money", add the phrase: "extension of time,"

15.1.2 Add the following to the end of the paragraph: A Reservation of Rights and similar stipulations shall not be recognized under this contract as having any effect. A party must make a claim as defined herein within the time limits provided.

15.1.3 In the second sentence of the Subparagraph, delete "the decisions of the Initial Decision Maker" and replace with: "his/her decision".

Delete Paragraph 15.1.5.2 and substitute the following:

If adverse weather conditions are the basis for a claim for additional time, the Contractor shall document that weather conditions had an adverse effect on the scheduled construction. An increase in the contract time due to weather shall not be cause for an increase in the contract sum. At the end of each month, the Contractor shall make one Claim for any adverse weather days occurring within the month. The Claim must be accompanied by sufficient documentation evidencing the adverse days and the impact on construction. Failure to make such Claim within twenty-one (21) days from the last day of the month shall prohibit any future claims for adverse days for that month.

15.1.5.3 Add the following Subparagraph:

The following are considered reasonably anticipated days of adverse weather on a monthly basis:

January	11 days	July	6 days
February	10 days	August	5 days
March	8 days	September	4 days
April	7 days	October	3 days
May	5 days	November	5 days
June	6 days	December	8 days

The Contractor shall ask for total adverse weather days. The Contractor's request shall be considered only for days over the allowable number of days stated above.

Note: Contract is on a calendar day basis.

15.2 INITIAL DECISION

15.2.1 In the second sentence, delete the word "will" and replace with: "shall always".

In the second sentence, delete the phrase: "unless otherwise indicated in the Agreement."

In the third sentence, delete the word "mediation" and replace with: "litigation".

In the third sentence, delete: "unless 30 days have passed after the Claim has been referred to the Initial Decision Maker with no decision having been rendered."

15.2.5 In the middle of the first sentence, delete all after the phrase: "rejecting the Claim".

In the second sentence, delete the phrase: "and the Architect, if the Architect is not serving as the Initial Decision Maker."

In the third sentence, delete all after: "binding on the parties" and add the following: "except that the Owner may reject the solution or suggest a compromise or both."

15.2.6 Delete Paragraph.

Delete Subparagraph 15.2.6.1

15.3 MEDIATION

Delete Article 15.3

15.4 ARBITRATION

Delete Article 15.4

GENERAL SPECIFICATIONS

GENERAL REQUIREMENTS

The Contractor shall furnish and install all labor and material necessary to provide and install the complete portion of this contract, including all materials and equipment as shown on the plans. It is the intention of these specifications that all systems be furnished complete with whatever necessary items are required to produce a satisfactory installation in a working order. The Contractor shall be responsible for bringing to the attention of the Owner any shortcomings of the design, or thereby, shall be responsible in full to meet the conditions set forth, that being, the system is to be in a satisfactory working order.

All material shall be installed in accordance with the instructions of the manufacturers. The work shall be done in strict compliance with state and local ordinances governing this class of work. The prospective bidder shall visit the job site and become familiar with all existing conditions found at the site. The Contractor shall become acquainted with all existing factors and conditions which affect the work. Failure to do so shall not relieve meeting the responsibility to install the work correctly.

The Contractor shall protect the entire installation from injury on the project until final acceptance. Failure to do so shall be sufficient cause for the Agent to reject any work.

CONSTRUCTION FORCE

The Contractor shall provide and maintain in full operation at all times during the performance of the contract a sufficient work crew to execute the work with dispatch. The Contractor shall provide a full time superintendent who shall be on the job during all working periods.

The Contractor shall be responsible for maintenance and repair of all equipment installed by him which fails due to substandard workmanship.

PARKING

Contractor shall be responsible for all fees for temporary campus parking permits. The Facility Management department shall request the permits through the UL Parking and Transit department. Contractor shall be required to display the permit on their vehicles at all times while on campus. Failure to do so may result in parking citation.

DEQ NOTIFICATION

The Contractor shall be responsible for the proper notification of the Department of Environmental Quality whenever demolition work is to be performed. Copies of the DEQ Notification Form AAC-2 and any additional correspondence with DEQ shall be copied to the University.

STANDARDS

All materials furnished under this contract shall be designed, constructed and rated in accordance with the latest applicable standards, and shall pass tests as recommended therein.

WORKMANSHIP AND MATERIALS

The workmanship shall conform to the best accepted construction practice. Should it become evident that during the course of construction that the items indicated on the plans, are for any reason

undesirable, the Contractor shall immediately bring the situation to the attention of the Agent for a decision. The Contractor shall be responsible for installing the proper materials as described by the drawings and specifications.

All materials furnished for this project shall be new, undamaged, and bear the label of the Underwriters' Laboratories, Inc. Deliver materials in manufacturer's original package and store on skids so that the materials are off the ground, and so that product labels are exposed for easy inspection.

The Bidder shall base the proposal on materials herein specified. Reference to specific manufacturers or trade names is not intended to limit or indicate preference to specific manufacturers, but to indicate a standard of quality. Written approval from the Agent is required on all substitutions prior to installations.

GUARANTEE

The Contractor shall guarantee new materials and workmanship for a minimum of one (1) full year after formal acceptance of the project. The Contractor will replace defective material and repair all workmanship defects promptly, and absorb all costs.

This provision shall not override any other warranties that are specified herein.

CAMPUS SAFETY POLICY

Contractor shall adhere to the campus safety policy. Information regarding campus safety can be found on the UL Lafayette website at: http://www.louisiana.edu/ehs

LOUISIANA ONE CALL

UL Lafayette is a member in the Louisiana One Call system. At least 72 hours before digging anywhere on UL Lafayette property the contractor **must** call 1-800-272-3020 to verify the location of utilities.

EXISTING LANDSCAPING

Contractor is liable for any damages caused to the existing landscaping. All landscaping must be protected from root compaction and other physical damage. Contractor **must** provide three foot high orange construction fencing around the drip line of all trees within the construction site.

ASBESTOS

The contractor **will not** be required to interface with any asbestos containing material (ACM) during this project. The State of Louisiana has conducted an asbestos survey of all buildings on the UL Lafayette campus. The results of the survey are compiled in management plans for each building. The management plans were assembled according to the requirements set forth in the Department of Environmental Quality Required Elements Index. These plans are available for review to anyone interested in the results. The plans are kept on file in the Reserve Reading Room of Edith Garland Dupre' Library.

COORDINATION OF WORK

The Contractor shall inform the Agent each day of his work location before proceeding to work, and each time the Contractor moves into a different area.

PAYMENT

The Contractor may invoice the Owner for work performed on a monthly basis. The work performed shall meet the approval of UL Lafayette. UL Lafayette shall process payment after verification of the invoice.

On projects where a performance bond is specified, the University will withhold ten percent (10%) retainage from all payments for completed work. The retainage will be released to the contractor according to the procedures set forth in the "INSTRUCTIONS TO BIDDERS AND GENERAL CONDITIONS", section 10.

FINAL PAYMENT WILL NOT BE ISSUED UNTIL ALL UNIVERSITY KEYS HAVE BEEN RETURNED TO THE FACILITY MANAGEMENT OFFICE.

CLEAN-UP

The Contractor is responsible for the daily clean-up and disposal of all trash and construction debris relating to this project. University dumpsters shall **not** be used for the disposal of debris. Should the Contractor dispose of any debris into University facilities, the cost of removal will be deducted from the University's final payment under this contract. Occupied areas (e.g.: Classrooms, Offices, Labs, etc.) shall be broom cleaned and vacuumed at the end of the work day to allow use of the room by the university. Debris and materials shall be removed from the rooms to allow use of the room by the university.

INSURANCE

The successful Bidder/Contractor shall carry and maintain Workmen's Compensation and Public Liability and Property Damage Insurance in accordance with the statutes and laws of the State of Louisiana, and he/she shall furnish the Owner with satisfactory proof of carriage of the insurance required. This coverage shall be in accordance with the *Louisiana Office of Risk Management Procedural Manual for Insurance Requirements in Contracts, Exhibit A*, which can read online at:
http://doa.louisiana.gov/orm/uw.htm

This required coverage includes, but is not limited to:

1. Minimum $1,000,000.00 Comprehensive General Liability coverage per occurrence
2. Minimum $2,000,000.00 Comprehensive General Liability coverage general aggregate
3. Minimum $1,000,000.00 Automobile Liability coverage per occurrence.
4. Workman Compensation coverage for all contractor employees, as statutorily required.

Unless otherwise specified in this document, upon award of the Contract, the Contractor shall be required to submit a Certificate of Insurance naming the University as an additional insured for the duration of the Contract.

INDEMNIFICATION

The Contractor will indemnify and hold harmless the Owner and all of their agents and employees from and against all claims, damages, losses, and expenses including attorney's fees arising out of or resulting from operations under the Contract Documents by the Contractor, and subcontractor,

anyone directly or indirectly employed by any of them, or anyone for whose acts any of them may be liable, which are caused in whole or in part by any error, omission, or act of any of them. If any and all claims against the Owner or any of their agents or employees by any employee of the Contractor, subcontractor, anyone directly or indirectly employed by any of them, or anyone for whose acts any of them may be liable, the indemnification obligation or the Contractor under this article shall not be limited in any way by any limitation on the amount or type of damages, compensation or benefits payable by or for the Contractor or any subcontractor under Workmen's Compensation laws.

DETAILED SPECIFICATIONS

Section 033000 – Cast – In Place Concrete

PART 1 - GENERAL

1.1 RELATED DOCUMENTS

a. Drawings and general provisions of the Contract, including General and Supplementary Conditions and Division 01 Specification Sections, apply to this Section.

1.2 SUMMARY

a. Section includes cast-in-place concrete, including formwork, reinforcement, concrete materials, mixture design, placement procedures, and finishes, for the following:

i. Foundations.

1.3 DEFINITIONS

a. Cementitious Materials: Portland cement alone or in combination with one or more of the following: blended hydraulic cement, fly ash and other pozzolans, ground granulated blast-furnace slag, and silica fume; subject to compliance with requirements.

1.4 ACTION SUBMITTALS

a. Product Data: For each type of product indicated.

b. Design Mixtures: For each concrete mixture. Submit alternate design mixtures when characteristics of materials, Project conditions, weather, test results, or other circumstances warrant adjustments.

i. Indicate amounts of mixing water to be withheld for later addition at Project site.

c. Steel Reinforcement Shop Drawings: Placing drawings that detail fabrication, bending, and placement. Include bar sizes, lengths, material, grade, bar schedules, stirrup spacing, bent bar diagrams, bar arrangement, splices and laps, mechanical connections, tie spacing, hoop spacing, and supports for concrete reinforcement.

1.5 INFORMATIONAL SUBMITTALS

a. Material Certificates: For each of the following, signed by manufacturers:

i. Cementitious materials.
ii. Admixtures.
iii. Form materials and form-release agents.
iv. Steel reinforcement and accessories.
v. Fiber reinforcement.
vi. Adhesives.
vii. Semi-rigid joint filler.
viii. Joint-filler strips.
ix. Repair materials.

b. Material Test Reports: For the following, from a qualified testing agency, indicating compliance with requirements:

i. Aggregates.

c. Field quality-control reports.

1.6 QUALITY ASSURANCE

a. Manufacturer Qualifications: A firm experienced in manufacturing ready-mixed concrete products and that complies with ASTM C 94/C 94M requirements for production facilities and equipment.

i. Manufacturer certified according to NRMCA's "Certification of Ready Mixed Concrete Production Facilities."

b. Testing Agency Qualifications: An independent agency, acceptable to authorities having jurisdiction, qualified according to ASTM C 1077 and ASTM E 329 for testing indicated.

i. Personnel conducting field tests shall be qualified as ACI Concrete Field Testing Technician, Grade 1, according to ACI CP-1 or an equivalent certification program.
ii. Personnel performing laboratory tests shall be ACI-certified Concrete Strength Testing Technician and Concrete Laboratory Testing Technician - Grade I. Testing Agency laboratory supervisor shall be an ACI-certified Concrete Laboratory Testing Technician - Grade II.

c. Source Limitations: Obtain each type or class of cementitious material of the same brand from the same manufacturer's plant, obtain aggregate from single source, and obtain admixtures from single source from single manufacturer.

d. ACI Publications: Comply with the following unless modified by requirements in the Contract Documents:

i. ACI 301, "Specifications for Structural Concrete," Sections 1 through 5 and Section 7, "Lightweight Concrete."

ii. ACI 117, "Specifications for Tolerances for Concrete Construction and Materials."

e. Concrete Testing Service: Engage a qualified independent testing agency to perform material evaluation tests and to design concrete mixtures.

1.7 DELIVERY, STORAGE, AND HANDLING

a. Steel Reinforcement: Deliver, store, and handle steel reinforcement to prevent bending and damage.

PART 2 - PART 2 – PRODUCTS

2.1 FORM-FACING MATERIALS

a. Smooth-Formed Finished Concrete: Form-facing panels that will provide continuous, true, and smooth concrete surfaces. Furnish in largest practicable sizes to minimize number of joints.

i. Plywood, metal, or other approved panel materials.
ii. Exterior-grade plywood panels, suitable for concrete forms, complying with DOC PS 1, and as follows:

1. High-density overlay, Class 1 or better.
2. Medium-density overlay, Class 1 or better; mill-release agent treated and edge sealed.
3. Structural 1, B-B or better; mill oiled and edge sealed.
4. B-B (Concrete Form), Class 1 or better; mill oiled and edge sealed.

b. Rough-Formed Finished Concrete: Plywood, lumber, metal, or another approved material. Provide lumber dressed on at least two edges and one side for tight fit.

c. Forms for Cylindrical Columns, Pedestals, and Supports: Metal, glass-fiber-reinforced plastic, paper, or fiber tubes that will produce surfaces with gradual or abrupt irregularities not exceeding specified formwork surface class. Provide units with sufficient wall thickness to resist plastic concrete loads without detrimental deformation.

d. Pan-Type Forms: Glass-fiber-reinforced plastic or formed steel, stiffened to resist plastic concrete loads without detrimental deformation.

e. Void Forms: Biodegradable paper surface, treated for moisture resistance, structurally sufficient to support weight of plastic concrete and other superimposed loads.

f. Chamfer Strips: Wood, metal, PVC, or rubber strips, 3/4 by 3/4 inch (19 by 19 mm), minimum.

g. Rustication Strips: Wood, metal, PVC, or rubber strips, kerfed for ease of form removal.

h. Form-Release Agent: Commercially formulated form-release agent that will not bond with, stain, or adversely affect concrete surfaces and will not impair subsequent treatments of concrete surfaces.

i. Formulate form-release agent with rust inhibitor for steel form-facing materials.

i. Form Ties: Factory-fabricated, removable or snap-off metal or glass-fiber-reinforced plastic form ties designed to resist lateral pressure of fresh concrete on forms and to prevent spalling of concrete on removal.

i. Furnish units that will leave no corrodible metal closer than 1 inch (25 mm) to the plane of exposed concrete surface.
ii. Furnish ties that, when removed, will leave holes no larger than 1 inch (25 mm) in diameter in concrete surface.
iii. Furnish ties with integral water-barrier plates to walls indicated to receive damp-proofing or waterproofing.

2.2 STEEL REINFORCEMENT

a. Recycled Content of Steel Products: Postconsumer recycled content plus one-half of pre-consumer recycled content not less than 25 percent.

b. Reinforcing Bars: ASTM A 615/A 615M, Grade 60 deformed.

c. Low-Alloy-Steel Reinforcing Bars: ASTM A 706/A 706M, deformed.

d. Plain-Steel Wire: ASTM A 82/A 82M, as drawn.

e. Deformed-Steel Wire: ASTM A 496/A 496M.

f. Plain-Steel Welded Wire Reinforcement: ASTM A 185/A 185M, plain, fabricated from as-drawn steel wire into flat sheets.

g. Deformed-Steel Welded Wire Reinforcement: ASTM A 497/A 497M, flat sheet.

2.3 REINFORCEMENT ACCESSORIES

a. Joint Dowel Bars: ASTM A 615/A 615M, Grade 60 , plain-steel bars, cut true to length with ends square and free of burrs.

b. Epoxy-Coated Joint Dowel Bars: ASTM A 615/A 615M, Grade 60, plain-steel bars, ASTM A 775/A 775M epoxy coated.

c. Bar Supports: Bolsters, chairs, spacers, and other devices for spacing, supporting, and fastening reinforcing bars and welded wire reinforcement in place. Manufacture bar supports from steel wire, plastic, or precast concrete according to CRSI's "Manual of Standard Practice," of greater compressive strength than concrete and as follows:

i. For concrete surfaces exposed to view where legs of wire bar supports contact forms, use CRSI Class 1 plastic-protected steel wire or CRSI Class 2 stainless-steel bar supports.
ii. For epoxy-coated reinforcement, use epoxy-coated or other dielectric-polymer-coated wire bar supports.
iii. For zinc-coated reinforcement, use galvanized wire or dielectric-polymer-coated wire bar supports.

2.4 CONCRETE MATERIALS

a. Cementitious Material: Use the following cementitious materials, of the same type, brand, and source, throughout Project:

i. Portland Cement: ASTM C 150, Grey

b. Normal-Weight Aggregates: ASTM C 33, Class 3S coarse aggregate or better, graded. Provide aggregates from a single source. Retain coarse-aggregate size from three options in first subparagraph below; insert gradation requirements if preferred. Aggregate size limits relate to spacing of steel reinforcement, depth of slab, or thickness of concrete member.

i. Maximum Coarse-Aggregate Size: 3/4 inch nominal.

ii. Fine Aggregate: Free of materials with deleterious reactivity to alkali in cement.

c. Water: ASTM C 94/C 94M and potable.

2.5 ADMIXTURES

a. Color Pigment: ASTM C 979, synthetic mineral-oxide pigments or colored water-reducing admixtures; color stable, free of carbon black, nonfading, and resistant to lime and other alkalis.

i. Color: as indicated on the drawings

.

2.6 REPAIR MATERIALS

a. Repair Underlayment: Cement-based, polymer-modified, self-leveling product that can be applied in thicknesses from 1/8 inch (3.2 mm) and that can be feathered at edges to match adjacent floor elevations.

i. Cement Binder: ASTM C 150, portland cement or hydraulic or blended hydraulic cement as defined in ASTM C 219.
ii. Primer: Product of underlayment manufacturer recommended for substrate, conditions, and application.
iii. Aggregate: Well-graded, washed gravel, 1/8 to 1/4 inch (3.2 to 6 mm) or coarse sand as recommended by underlayment manufacturer.

iv. Compressive Strength: Not less than **4100 psi (29 MPa)** at 28 days when tested according to ASTM C 109/C 109M.

b. Repair Overlayment: Cement-based, polymer-modified, self-leveling product that can be applied in thicknesses from 1/4 inch (6.4 mm) and that can be filled in over a scarified surface to match adjacent floor elevations.

i. Cement Binder: ASTM C 150, portland cement or hydraulic or blended hydraulic cement as defined in ASTM C 219.
ii. Primer: Product of topping manufacturer recommended for substrate, conditions, and application.
iii. Aggregate: Well-graded, washed gravel, 1/8 to 1/4 inch (3.2 to 6 mm) or coarse sand as recommended by topping manufacturer.
iv. Compressive Strength: Not less than **5000 psi (34.5 MPa)** at 28 days when tested according to ASTM C 109/C 109M.

2.7 CONCRETE MIXTURES, GENERAL

a. Prepare design mixtures for each type and strength of concrete, proportioned on the basis of laboratory trial mixture or field test data, or both, according to ACI 301.

i. Use a qualified independent testing agency for preparing and reporting proposed mixture designs based on laboratory trial mixtures.

b. Cementitious Materials: **Use fly ash, pozzolan, ground granulated blast-furnace slag, and silica fume as needed to reduce the total amount of portland cement, which would otherwise be used, by not less than 40 percent.**

i. Fly Ash: 25 percent.
ii. Combined Fly Ash and Pozzolan: 25 percent.
iii. Ground Granulated Blast-Furnace Slag: 50 percent.
iv. Combined Fly Ash or Pozzolan and Ground Granulated Blast-Furnace Slag: 50 percent portland cement minimum, with fly ash or pozzolan not exceeding 25 percent.
v. Silica Fume: 10 percent.
vi. Combined Fly Ash, Pozzolans, and Silica Fume: 35 percent with fly ash or pozzolans not exceeding 25 percent and silica fume not exceeding 10 percent.
vii. Combined Fly Ash or Pozzolans, Ground Granulated Blast-Furnace Slag, and Silica Fume: 50 percent with fly ash or pozzolans not exceeding 25 percent and silica fume not exceeding 10 percent.

c. Limit water-soluble, chloride-ion content in hardened concrete to [**0.06**] [**0.15**] [**0.30**] [**1.00**] percent by weight of cement.

d. Admixtures: Use admixtures according to manufacturer's written instructions.

i. Use water-reducing or plasticizing admixture in concrete, as required, for placement and workability.

ii. Use water-reducing and retarding admixture when required by high temperatures, low humidity, or other adverse placement conditions.
iii. Use water-reducing admixture in pumped concrete, concrete for heavy-use industrial slabs and parking structure slabs, concrete required to be watertight, and concrete with a water-cementitious materials ratio below 0.50.
iv. Use corrosion-inhibiting admixture in concrete mixtures where indicated.

e. Color Pigment: Add color pigment to concrete mixture according to manufacturer's written instructions and to result in hardened concrete color consistent with approved mockup.

2.8 CONCRETE MIXTURES FOR BUILDING ELEMENTS

a. Foundations: Proportion normal-weight concrete mixture as follows:

i. Minimum Compressive Strength: 3500 psi (24.1 MPa) at 28 days.
ii. Maximum Water-Cementitious Materials Ratio: [0.50] [0.45] [0.40] <Insert ratio>.
iii. Slump Limit: 4 inches (100 mm) for concrete with verified slump of 2 to 4 inches (50 to 100 mm) before adding high-range water-reducing admixture or plasticizing admixture plus or minus 1 inch (25 mm).
iv. Air Content: 5.5 percent, plus or minus 1.5 percent at point of delivery for 1-1/2-inch (38-mm) nominal maximum aggregate size.

2.9 FABRICATING REINFORCEMENT

a. Fabricate steel reinforcement according to CRSI's "Manual of Standard Practice."

2.10 CONCRETE MIXING

a. Ready-Mixed Concrete: Measure, batch, mix, and deliver concrete according to ASTM C 94/C 94M and ASTM C 1116/C 1116M, and furnish batch ticket information.

i. When air temperature is between 85 and 90 deg F (30 and 32 deg C), reduce mixing and delivery time from 1-1/2 hours to 75 minutes; when air temperature is above 90 deg F (32 deg C), reduce mixing and delivery time to 60 minutes.

b. Project-Site Mixing: Measure, batch, and mix concrete materials and concrete according to ASTM C 94/C 94M. Mix concrete materials in appropriate drum-type batch machine mixer.

i. For mixer capacity of 1 cu. yd. (0.76 cu. m) or smaller, continue mixing at least 1-1/2 minutes, but not more than 5 minutes after ingredients are in mixer, before any part of batch is released.
ii. For mixer capacity larger than 1 cu. yd. (0.76 cu. m), increase mixing time by 15 seconds for each additional 1 cu. yd. (0.76 cu. m).
iii. Provide batch ticket for each batch discharged and used in the Work, indicating Project identification name and number, date, mixture type, mixture time, quantity,

and amount of water added. Record approximate location of final deposit in structure.

PART 3 - EXECUTION

3.1 FORMWORK

a. Design, erect, shore, brace, and maintain formwork, according to ACI 301, to support vertical, lateral, static, and dynamic loads, and construction loads that might be applied, until structure can support such loads.

b. Construct formwork so concrete members and structures are of size, shape, alignment, elevation, and position indicated, within tolerance limits of ACI 117.

c. Construct forms tight enough to prevent loss of concrete mortar.

d. Fabricate forms for easy removal without hammering or prying against concrete surfaces. Provide crush or wrecking plates where stripping may damage cast concrete surfaces. Provide top forms for inclined surfaces steeper than 1.5 horizontal to 1 vertical.

   i. Install keyways, reglets, recesses, and the like, for easy removal.
   ii. Do not use rust-stained steel form-facing material.

e. Set edge forms, bulkheads, and intermediate screed strips for slabs to achieve required elevations and slopes in finished concrete surfaces. Provide and secure units to support screed strips; use strike-off templates or compacting-type screeds.

f. Provide temporary openings for cleanouts and inspection ports where interior area of formwork is inaccessible. Close openings with panels tightly fitted to forms and securely braced to prevent loss of concrete mortar. Locate temporary openings in forms at inconspicuous locations.

g. Chamfer exterior corners and edges of permanently exposed concrete.

h. Form openings, chases, offsets, sinkages, keyways, reglets, blocking, screeds, and bulkheads required in the Work. Determine sizes and locations from trades providing such items.

i. Clean forms and adjacent surfaces to receive concrete. Remove chips, wood, sawdust, dirt, and other debris just before placing concrete.

j. Retighten forms and bracing before placing concrete, as required, to prevent mortar leaks and maintain proper alignment.

k. Coat contact surfaces of forms with form-release agent, according to manufacturer's written instructions, before placing reinforcement.

3.2 EMBEDDED ITEMS

a. Place and secure anchorage devices and other embedded items required for adjoining work that is attached to or supported by cast-in-place concrete. Use setting drawings, templates, diagrams, instructions, and directions furnished with items to be embedded.

i. Install anchor rods, accurately located, to elevations required and complying with tolerances in Section 7.5 of AISC's "Code of Standard Practice for Steel Buildings and Bridges."

ii. Install reglets to receive waterproofing and to receive through-wall flashings in outer face of concrete frame at exterior walls, where flashing is shown at lintels, shelf angles, and other conditions.

iii. Install dovetail anchor slots in concrete structures as indicated.

3.3 SHORES AND RESHORES

a. Comply with ACI 318 (ACI 318M) and ACI 301 for design, installation, and removal of shoring and reshoring.

i. Do not remove shoring or reshoring until measurement of slab tolerances is complete.

b. In multistory construction, extend shoring or reshoring over a sufficient number of stories to distribute loads in such a manner that no floor or member will be excessively loaded or will induce tensile stress in concrete members without sufficient steel reinforcement.

c. Plan sequence of removal of shores and reshore to avoid damage to concrete. Locate and provide adequate reshoring to support construction without excessive stress or deflection.

3.4 STEEL REINFORCEMENT

a. General: Comply with CRSI's "Manual of Standard Practice" for placing reinforcement.

i. Do not cut or puncture vapor retarder. Repair damage and reseal vapor retarder before placing concrete.

b. Clean reinforcement of loose rust and mill scale, earth, ice, and other foreign materials that would reduce bond to concrete.

c. Accurately position, support, and secure reinforcement against displacement. Locate and support reinforcement with bar supports to maintain minimum concrete cover. Do not tack weld crossing reinforcing bars.

i. Weld reinforcing bars according to AWS D1.4/D 1.4M, where indicated.

d. Set wire ties with ends directed into concrete, not toward exposed concrete surfaces.

e. Install welded wire reinforcement in longest practicable lengths on bar supports spaced to minimize sagging. Lap edges and ends of adjoining sheets at least one mesh spacing.

Offset laps of adjoining sheet widths to prevent continuous laps in either direction. Lace overlaps with wire.

f. Epoxy-Coated Reinforcement: Repair cut and damaged epoxy coatings with epoxy repair coating according to ASTM D 3963/D 3963M. Use epoxy-coated steel wire ties to fasten epoxy-coated steel reinforcement.

g. Zinc-Coated Reinforcement: Repair cut and damaged zinc coatings with zinc repair material according to ASTM A 780. Use galvanized steel wire ties to fasten zinc-coated steel reinforcement.

3.5 CONCRETE PLACEMENT

a. Before placing concrete, verify that installation of formwork, reinforcement, and embedded items is complete and that required inspections have been performed.

b. Do not add water to concrete during delivery, at Project site, or during placement unless approved by Architect.

c. Before test sampling and placing concrete, water may be added at Project site, subject to limitations of ACI 301.

   i. Do not add water to concrete after adding high-range water-reducing admixtures to mixture.

d. Deposit concrete continuously in one layer or in horizontal layers of such thickness that no new concrete will be placed on concrete that has hardened enough to cause seams or planes of weakness. If a section cannot be placed continuously, provide construction joints as indicated. Deposit concrete to avoid segregation.

   i. Deposit concrete in horizontal layers of depth to not exceed formwork design pressures and in a manner to avoid inclined construction joints.
   ii. Consolidate placed concrete with mechanical vibrating equipment according to ACI 301.
   iii. Do not use vibrators to transport concrete inside forms. Insert and withdraw vibrators vertically at uniformly spaced locations to rapidly penetrate placed layer and at least 6 inches (150 mm) into preceding layer. Do not insert vibrators into lower layers of concrete that have begun to lose plasticity. At each insertion, limit duration of vibration to time necessary to consolidate concrete and complete embedment of reinforcement and other embedded items without causing mixture constituents to segregate.

e. Deposit and consolidate concrete for floors and slabs in a continuous operation, within limits of construction joints, until placement of a panel or section is complete.

   i. Consolidate concrete during placement operations so concrete is thoroughly worked around reinforcement and other embedded items and into corners.
   ii. Maintain reinforcement in position on chairs during concrete placement.
   iii. Screed slab surfaces with a straightedge and strike off to correct elevations.

iv. Slope surfaces uniformly to drains where required.

v. Begin initial floating using bull floats or darbies to form a uniform and open-textured surface plane, before excess bleedwater appears on the surface. Do not further disturb slab surfaces before starting finishing operations.

f. Cold-Weather Placement: Comply with ACI 306.1 and as follows. Protect concrete work from physical damage or reduced strength that could be caused by frost, freezing actions, or low temperatures.

i. When average high and low temperature is expected to fall below 40 deg F (4.4 deg C) for three successive days, maintain delivered concrete mixture temperature within the temperature range required by ACI 301.

ii. Do not use frozen materials or materials containing ice or snow. Do not place concrete on frozen subgrade or on subgrade containing frozen materials.

iii. Do not use calcium chloride, salt, or other materials containing antifreeze agents or chemical accelerators unless otherwise specified and approved in mixture designs.

g. Hot-Weather Placement: Comply with ACI 301 and as follows:

i. Maintain concrete temperature below 90 deg F (32 deg C) at time of placement. Chilled mixing water or chopped ice may be used to control temperature, provided water equivalent of ice is calculated to total amount of mixing water. Using liquid nitrogen to cool concrete is Contractor's option.

ii. Fog-spray forms, steel reinforcement, and subgrade just before placing concrete. Keep subgrade uniformly moist without standing water, soft spots, or dry areas.

3.6 FINISHING FORMED SURFACES

a. Rough-Formed Finish: As-cast concrete texture imparted by form-facing material with tie holes and defects repaired and patched. Remove fins and other projections that exceed specified limits on formed-surface irregularities.

i. Apply to concrete surfaces **not exposed to public view**.

b. Smooth-Formed Finish: As-cast concrete texture imparted by form-facing material, arranged in an orderly and symmetrical manner with a minimum of seams. Repair and patch tie holes and defects. Remove fins and other projections that exceed specified limits on formed-surface irregularities.

i. Apply to concrete surfaces exposed to public view. Retain rubbed finish in first paragraph below with smooth-formed finish in paragraph above.

c. Rubbed Finish: Apply the following to smooth-formed finished as-cast concrete where indicated:

i. Smooth-Rubbed Finish: Not later than one day after form removal, moisten concrete surfaces and rub with carborundum brick or another abrasive until producing a uniform color and texture. Do not apply cement grout other than that created by the rubbing process.

ii. Grout-Cleaned Finish: Wet concrete surfaces and apply grout of a consistency of thick paint to coat surfaces and fill small holes. Mix one part portland cement to one and one-half parts fine sand with a 1:1 mixture of bonding admixture and water. Add white portland cement in amounts determined by trial patches so color of dry grout will match adjacent surfaces. Scrub grout into voids and remove excess grout. When grout whitens, rub surface with clean burlap and keep surface damp by fog spray for at least 36 hours.

iii. Cork-Floated Finish: Wet concrete surfaces and apply a stiff grout. Mix one part portland cement and one part fine sand with a 1:1 mixture of bonding agent and water. Add white portland cement in amounts determined by trial patches so color of dry grout will match adjacent surfaces. Compress grout into voids by grinding surface. In a swirling motion, finish surface with a cork float.

d. Related Unformed Surfaces: At tops of walls, horizontal offsets, and similar unformed surfaces adjacent to formed surfaces, strike off smooth and finish with a texture matching adjacent formed surfaces. Continue final surface treatment of formed surfaces uniformly across adjacent unformed surfaces unless otherwise indicated.

3.7 FINISHING FOUNDATIONS

a. General: Comply with ACI 302.1R recommendations for screeding, restraightening, and finishing operations for concrete surfaces. Do not wet concrete surfaces.

b. Trowel and Fine-Broom Finish: Apply a first trowel finish to surfaces . While concrete is still plastic, slightly scarify surface with a fine broom.

i. Comply with flatness and levelness tolerances for trowel-finished floor surfaces.

3.8 MISCELLANEOUS CONCRETE ITEMS

a. Filling In: Fill in holes and openings left in concrete structures after work of other trades is in place unless otherwise indicated. Mix, place, and cure concrete, as specified, to blend with in-place construction. Provide other miscellaneous concrete filling indicated or required to complete the Work.

b. Curbs: Provide monolithic finish to interior curbs by stripping forms while concrete is still green and by steel-troweling surfaces to a hard, dense finish with corners, intersections, and terminations slightly rounded.

c. Equipment Bases and Foundations: Provide machine and equipment bases and foundations as shown on Drawings. Set anchor bolts for machines and equipment at correct elevations, complying with diagrams or templates from manufacturer furnishing machines and equipment.

d. Steel Pan Stairs: Provide concrete fill for steel pan stair treads, landings, and associated items. Cast-in inserts and accessories as shown on Drawings. Screed, tamp, and trowel finish concrete surfaces.

3.9 CONCRETE PROTECTING AND CURING

a. General: Protect freshly placed concrete from premature drying and excessive cold or hot temperatures. Comply with ACI 306.1 for cold-weather protection and ACI 301 for hot-weather protection during curing.

b. Evaporation Retarder: Apply evaporation retarder to unformed concrete surfaces if hot, dry, or windy conditions cause moisture loss approaching 0.2 lb/sq. ft. x h (1 kg/sq. m x h) before and during finishing operations. Apply according to manufacturer's written instructions after placing, screeding, and bull floating or darbying concrete, but before float finishing.

c. Formed Surfaces: Cure formed concrete surfaces, including underside of beams, supported slabs, and other similar surfaces. If forms remain during curing period, moist cure after loosening forms. If removing forms before end of curing period, continue curing for the remainder of the curing period.

d. Unformed Surfaces: Begin curing immediately after finishing concrete. Cure unformed surfaces, including floors and slabs, concrete floor toppings, and other surfaces.

e. Cure concrete according to ACI 308.1, by one or a combination of the following methods:

i. Moisture Curing: Keep surfaces continuously moist for not less than seven days with the following materials:

1. Water.
2. Continuous water-fog spray.
3. Absorptive cover, water saturated, and kept continuously wet. Cover concrete surfaces and edges with 12-inch (300-mm) lap over adjacent absorptive covers.

ii. Moisture-Retaining-Cover Curing: Cover concrete surfaces with moisture-retaining cover for curing concrete, placed in widest practicable width, with sides and ends lapped at least 12 inches (300 mm), and sealed by waterproof tape or adhesive. Cure for not less than seven days. Immediately repair any holes or tears during curing period using cover material and waterproof tape.

1. Moisture cure or use moisture-retaining covers to cure concrete surfaces to receive floor coverings.
2. Moisture cure or use moisture-retaining covers to cure concrete surfaces to receive penetrating liquid floor treatments.
3. Cure concrete surfaces to receive floor coverings with either a moisture-retaining cover or a curing compound that the manufacturer certifies will not interfere with bonding of floor covering used on Project.

3.10 JOINT FILLING

a. Prepare, clean, and install joint filler according to manufacturer's written instructions.

i. Defer joint filling until concrete has aged at least [**one**] [**six**] month(s). Do not fill joints until construction traffic has permanently ceased.

b. Remove dirt, debris, saw cuttings, curing compounds, and sealers from joints; leave contact faces of joint clean and dry.

c. Install semirigid joint filler full depth in saw-cut joints and at least 2 inches (50 mm) deep in formed joints. Overfill joint and trim joint filler flush with top of joint after hardening.

3.11 CONCRETE SURFACE REPAIRS

a. Defective Concrete: Repair and patch defective areas when approved by Architect. Remove and replace concrete that cannot be repaired and patched to Architect's approval.

b. Patching Mortar: Mix dry-pack patching mortar, consisting of one part portland cement to two and one-half parts fine aggregate passing a No. 16 (1.18-mm) sieve, using only enough water for handling and placing.

c. Repairing Formed Surfaces: Surface defects include color and texture irregularities, cracks, spalls, air bubbles, honeycombs, rock pockets, fins and other projections on the surface, and stains and other discolorations that cannot be removed by cleaning.

i. Immediately after form removal, cut out honeycombs, rock pockets, and voids more than 1/2 inch (13 mm) in any dimension to solid concrete. Limit cut depth to 3/4 inch (19 mm). Make edges of cuts perpendicular to concrete surface. Clean, dampen with water, and brush-coat holes and voids with bonding agent. Fill and compact with patching mortar before bonding agent has dried. Fill form-tie voids with patching mortar or cone plugs secured in place with bonding agent.

ii. Repair defects on surfaces exposed to view by blending white portland cement and standard portland cement so that, when dry, patching mortar will match surrounding color. Patch a test area at inconspicuous locations to verify mixture and color match before proceeding with patching. Compact mortar in place and strike off slightly higher than surrounding surface.

iii. Repair defects on concealed formed surfaces that affect concrete's durability and structural performance as determined by Architect.

d. Repairing Unformed Surfaces: Test unformed surfaces, such as floors and slabs, for finish and verify surface tolerances specified for each surface. Correct low and high areas. Test surfaces sloped to drain for trueness of slope and smoothness; use a sloped template.

i. Repair finished surfaces containing defects. Surface defects include spalls, popouts, honeycombs, rock pockets, crazing and cracks in excess of 0.01 inch (0.25 mm) wide or that penetrate to reinforcement or completely through unreinforced sections regardless of width, and other objectionable conditions.

ii. After concrete has cured at least 14 days, correct high areas by grinding.

iii. Correct localized low areas during or immediately after completing surface finishing operations by cutting out low areas and replacing with patching mortar. Finish repaired areas to blend into adjacent concrete.

iv. Correct other low areas scheduled to receive floor coverings with a repair underlayment. Prepare, mix, and apply repair underlayment and primer according to manufacturer's written instructions to produce a smooth, uniform, plane, and level surface. Feather edges to match adjacent floor elevations.

v. Correct other low areas scheduled to remain exposed with a repair topping. Cut out low areas to ensure a minimum repair topping depth of 1/4 inch (6 mm) to match adjacent floor elevations. Prepare, mix, and apply repair topping and primer according to manufacturer's written instructions to produce a smooth, uniform, plane, and level surface.

vi. Repair defective areas, except random cracks and single holes 1 inch (25 mm) or less in diameter, by cutting out and replacing with fresh concrete. Remove defective areas with clean, square cuts and expose steel reinforcement with at least a 3/4-inch (19-mm) clearance all around. Dampen concrete surfaces in contact with patching concrete and apply bonding agent. Mix patching concrete of same materials and mixture as original concrete except without coarse aggregate. Place, compact, and finish to blend with adjacent finished concrete. Cure in same manner as adjacent concrete.

vii. Repair random cracks and single holes 1 inch (25 mm) or less in diameter with patching mortar. Groove top of cracks and cut out holes to sound concrete and clean off dust, dirt, and loose particles. Dampen cleaned concrete surfaces and apply bonding agent. Place patching mortar before bonding agent has dried. Compact patching mortar and finish to match adjacent concrete. Keep patched area continuously moist for at least 72 hours.

e. Perform structural repairs of concrete, subject to Architect's approval, using epoxy adhesive and patching mortar.

f. Repair materials and installation not specified above may be used, subject to Architect's approval.

3.12 FIELD QUALITY CONTROL

a. Inspections:

i. Steel reinforcement placement.
ii. Verification of use of required design mixture.
iii. Concrete placement, including conveying and depositing.
iv. Curing procedures and maintenance of curing temperature.
v. Verification of concrete strength before removal of shores and forms from beams and slabs.

b. Concrete Tests: Testing of composite samples of fresh concrete obtained according to ASTM C 172 shall be performed according to the following requirements:

i. Testing Frequency: Obtain one composite sample for each day's pour of each concrete mixture exceeding 5 cu. yd. (4 cu. m), but less than 25 cu. yd. (19 cu. m), plus one set for each additional 50 cu. yd. (38 cu. m) or fraction thereof.

ii. Coordinate the number of compression test specimens in subparagraph above with number of compressive-strength tests in first subparagraph below.

iii. Compressive-Strength Tests: ASTM C 39/C 39M; test one set of two laboratory-cured specimens at 7 days and one set of two specimens at 28 days.

1. Test one set of two field-cured specimens at 7 days and one set of two specimens at 28 days.
2. A compressive-strength test shall be the average compressive strength from a set of two specimens obtained from same composite sample and tested at age indicated.

iv. When strength of field-cured cylinders is less than 85 percent of companion laboratory-cured cylinders, Contractor shall evaluate operations and provide corrective procedures for protecting and curing in-place concrete.

v. Strength of each concrete mixture will be satisfactory if every average of any three consecutive compressive-strength tests equals or exceeds specified compressive strength and no compressive-strength test value falls below specified compressive strength by more than 500 psi (3.4 MPa).

vi. Test results shall be reported in writing to Architect, concrete manufacturer, and Contractor within 48 hours of testing. Reports of compressive-strength tests shall contain Project identification name and number, date of concrete placement, name of concrete testing and inspecting agency, location of concrete batch in Work, design compressive strength at 28 days, concrete mixture proportions and materials, compressive breaking strength, and type of break for both 7- and 28-day tests.

vii. Nondestructive Testing: Impact hammer, sonoscope, or other nondestructive device may be permitted by Architect but will not be used as sole basis for approval or rejection of concrete.

viii. Additional Tests: Testing and inspecting agency shall make additional tests of concrete when test results indicate that slump, air entrainment, compressive strengths, or other requirements have not been met, as directed by Architect. Testing and inspecting agency may conduct tests to determine adequacy of concrete by cored cylinders complying with ASTM C 42/C 42M or by other methods as directed by Architect.

ix. Additional testing and inspecting, at Contractor's expense, will be performed to determine compliance of replaced or additional work with specified requirements.

x. Correct deficiencies in the Work that test reports and inspections indicate do not comply with the Contract Documents.

END OF SECTION 033000

Section 16050 – Basic Electrical Materials and Methods

PART 1 - GENERAL

1.2 RELATED DOCUMENTS

A. Drawings and general provisions of the Contract, including General and Supplementary Conditions and Division 01 Specification Sections, apply to this Section.

1.3 SUMMARY

A. Section Includes:

1. Electrical equipment coordination and installation.
2. Grout.
3. Common electrical installation requirements.

1.4 DEFINITIONS

A. EPDM: Ethylene-propylene-diene terpolymer rubber.

B. NBR: Acrylonitrile-butadiene rubber.

1.5 SUBMITTALS

A. Product Data: For sleeve seals.

1.6 COORDINATION

A. Coordinate arrangement, mounting, and support of electrical equipment:

1. To allow maximum possible headroom unless specific mounting heights that reduce headroom are indicated.
2. To provide for ease of disconnecting the equipment with minimum interference to other installations.
3. To allow right of way for piping and conduit installed at required slope.
4. So connecting raceways, cables, wireways, cable trays, and busways will be clear of obstructions and of the working and access space of other equipment.

B. Coordinate installation of required supporting devices and set sleeves in cast-in-place concrete, masonry walls, and other structural components as they are constructed.

PART 2 - PRODUCTS

2.1 GROUT

A. Nonmetallic, Shrinkage-Resistant Grout: ASTM C 1107, factory-packaged, nonmetallic aggregate grout, noncorrosive, nonstaining, mixed with water to consistency suitable for application and a 30-minute working time.

PART 3 - EXECUTION

3.1 COMMON REQUIREMENTS FOR ELECTRICAL INSTALLATION

A. Comply with NECA 1.

B. Measure indicated mounting heights to bottom of unit for suspended items and to center of unit for wall-mounting items.

C. Headroom Maintenance: If mounting heights or other location criteria are not indicated, arrange and install components and equipment to provide maximum possible headroom consistent with these requirements.

D. Equipment: Install to facilitate service, maintenance, and repair or replacement of components of both electrical equipment and other nearby installations. Connect in such a way as to facilitate future disconnecting with minimum interference with other items in the vicinity.

E. Right of Way: Give to piping systems installed at a required slope.

F. Coordinate electrical service connections with user agency.

G. Where electrical identification devices are applied to field-finished surfaces, coordinate installation of identification devices with completion of finished surface.

END OF SECTION 16050

Section 16060 – Grounding and Bonding for Electrical Systems

PART 1 - GENERAL

1.1 RELATED DOCUMENTS

A. Drawings and general provisions of the Contract, including General and Supplementary Conditions and Division 01 Specification Sections, apply to this Section.

1.2 SUMMARY

A. This Section includes methods and materials for grounding systems and equipment.

1.3 SUBMITTALS

A. Product Data: For each type of product indicated.
B. Other Informational Submittals: Plans showing dimensioned as-built locations of grounding features specified in Part 3 "Field Quality Control" Article, including the following:

1. Ground rods.
2. Grounding arrangements and connections for separately derived systems.
3. Grounding for sensitive electronic equipment.

C. Qualification Data: For testing agency and testing agency's field supervisor.
D. Field quality-control test reports.
E. Operation and Maintenance Data: For grounding to include the following in emergency, operation, and maintenance manuals:

1. Instructions for periodic testing and inspection of grounding features at test wells based on NFPA 70B.
   a. Tests shall be to determine if ground resistance or impedance values remain within specified maximums, and instructions shall recommend corrective action if they do not.
   b. Include recommended testing intervals.

1.4 QUALITY ASSURANCE

A. Electrical Components, Devices, and Accessories: Listed and labeled as defined in NFPA 70, Article 100, by a testing agency acceptable to authorities having jurisdiction, and marked for intended use.
B. Comply with UL 467 for grounding and bonding materials and equipment.

PART 2 – PRODUCTS

2.1 CONDUCTORS

A. Insulated Conductors: Copper or tinned-copper wire or cable insulated for 600 V unless otherwise required by applicable Code or authorities having jurisdiction.
B. Bare Copper Conductors:
   1. Solid Conductors: ASTM B 3.

2. Stranded Conductors: ASTM B 8.
3. Tinned Conductors: ASTM B 33.
4. Bonding Cable: 28 kcmil, 14 strands of No. 17 AWG conductor, 1/4 inch (6 mm) in diameter.
5. Bonding Conductor: No. 4 or No. 6 AWG, stranded conductor.
6. Bonding Jumper: Copper tape, braided conductors, terminated with copper ferrules; 1-5/8 inches (41 mm) wide and 1/16 inch (1.6 mm) thick.
7. Tinned Bonding Jumper: Tinned-copper tape, braided conductors, terminated with copper ferrules; 1-5/8 inches (41 mm) wide and 1/16 inch (1.6 mm) thick.

C. Grounding Bus: Rectangular bars of annealed copper, 1/4 by 2 inches in cross section, unless otherwise indicated; with insulators.

2.2 CONNECTORS

A. Listed and labeled by a nationally recognized testing laboratory acceptable to authorities having jurisdiction for applications in which used, and for specific types, sizes, and combinations of conductors and other items connected.

B. Bolted Connectors for Conductors and Pipes: Copper or copper alloy, bolted pressure-type, with at least two bolts.
   1. Pipe Connectors: Clamp type, sized for pipe.

C. Welded Connectors: Exothermic-welding kits of types recommended by kit manufacturer for materials being joined and installation conditions.

2.3 GROUNDING ELECTRODES

A. Ground Rods: Copper-clad steel, sectional type; 3/4 inch by10 feet in diameter.

PART 3 – EXECUTION

3.1 APPLICATIONS

A. Conductors: Install solid conductor for No. 8 AWG and smaller, and stranded conductors for No. 6 AWG and larger, unless otherwise indicated.

B. Underground Grounding Conductors: Install bare tinned-copper conductor, No. 2/0 AWG minimum.
   1. Bury at least 24 inches below grade.
   2. Duct-Bank Grounding Conductor: Bury 12 inches above duct bank when indicated as part of duct-bank installation.

C. Grounding Bus: Install in electrical and telephone equipment rooms, in rooms housing service equipment, and elsewhere as indicated.

1. Install bus on insulated spacers 1 inch minimum, from wall 6 inches above finished floor, unless otherwise indicated.
2. Where indicated on both sides of doorways, route bus up to top of door frame, across top of doorway, down to specified height above floor, and connect to horizontal bus.

D. Conductor Terminations and Connections:

1. Pipe and Equipment Grounding Conductor Terminations: Bolted connectors.
2. Underground Connections: Welded connectors, except at test wells and as otherwise indicated.
3. Connections to Ground Rods at Test Wells: Bolted connectors.
4. Connections to Structural Steel: Welded connectors.

3.2 INSTALLATION

A. Grounding Conductors: Route along shortest and straightest paths possible, unless otherwise indicated or required by Code. Avoid obstructing access or placing conductors where they may be subjected to strain, impact, or damage.

B. Ground Rods: Drive rods until tops are 2 inches (50 mm) below finished floor or final grade, unless otherwise indicated.

1. Interconnect ground rods with grounding electrode conductor below grade and as otherwise indicated. Make connections without exposing steel or damaging coating, if any.
2. For grounding electrode system, install at least three rods spaced at least one-rod length from each other and located at least the same distance from other grounding electrodes, and connect to the service grounding electrode conductor.

3.4 FIELD QUALITY CONTROL

A. Perform the following tests and inspections and prepare test reports:

1. After installing grounding system but before permanent electrical circuits have been energized, test for compliance with requirements.
2. Test completed grounding system at each location where a maximum ground-resistance level is specified, at service disconnect enclosure grounding terminal, at ground test wells. Make tests at ground rods before any conductors are connected.
   a. Measure ground resistance not less than two full days after last trace of precipitation and without soil being moistened by any means other than natural drainage or seepage and without chemical treatment or other artificial means of reducing natural ground resistance.
   b. Perform tests by fall-of-potential method according to IEEE 81.

3. Prepare dimensioned drawings locating each test well, ground rod and ground rod assembly, and other grounding electrodes. Identify each by letter in alphabetical order, and key to the record of tests and observations. Include the number of rods driven and their depth at each location, and include observations of weather and other phenomena that may affect test results. Describe measures taken to improve test results.

C. Report measured ground resistances that exceed the following values:
   1. Substations and Pad-Mounted Equipment: 5 ohms.
   2. Manhole Grounds: 10 ohms.

D. Excessive Ground Resistance: If resistance to ground exceeds specified values, notify Architect promptly and include recommendations to reduce ground resistance.

END OF SECTION 16060

Section 16075 – Electrical Identification

PART 1 - GENERAL

1.2 RELATED DOCUMENTS

A. Drawings and general provisions of the Contract, including General and Supplementary Conditions and Division 01 Specification Sections, apply to this Section.

1.3 SUMMARY

A. This Section includes the following:

1. Identification for conductors and communication and control cable.
2. Warning labels and signs.
3. Instruction signs.
4. Equipment identification labels.
5. Miscellaneous identification products.

1.4 SUBMITTALS

A. Product Data: For each electrical identification product indicated.

B. Identification Schedule: An index of nomenclature of electrical equipment and system components used in identification signs and labels.

C. Samples: For each type of label and sign to illustrate size, colors, lettering style, mounting provisions, and graphic features of identification products.

1.5 QUALITY ASSURANCE

A. Comply with ANSI A13.1 and ANSI C2.

B. Comply with NFPA 70.

1.6 COORDINATION

A. Coordinate identification names, abbreviations, colors, and other features with requirements in the Contract Documents, Shop Drawings, manufacturer's wiring diagrams, and the Operation and Maintenance Manual, and with those required by codes and standards. Use consistent designations throughout Project.

B. Coordinate installation of identifying devices with completion of covering and painting of surfaces where devices are to be applied.

C. Coordinate installation of identifying devices with location of access panels and doors.

D. Install identifying devices before installing acoustical ceilings and similar concealment.

PART 2 - PRODUCTS

2.1 CONDUCTOR AND COMMUNICATION- AND CONTROL-CABLE IDENTIFICATION MATERIALS

A. Color-Coding Conductor Tape: Colored, self-adhesive vinyl tape not less than 3 mils thick by 1 to 2 inches wide.

B. Marker Tapes: Vinyl or vinyl-cloth, self-adhesive wraparound type, with circuit identification legend machine printed by thermal transfer or equivalent process.

2.2 WARNING LABELS AND SIGNS

A. Comply with NFPA 70 and 29 CFR 1910.145.

B. Self-Adhesive Warning Labels: Factory printed, multicolor, pressure-sensitive adhesive labels, configured for display on front cover, door, or other access to equipment, unless otherwise indicated.

C. Baked-Enamel Warning Signs: Preprinted aluminum signs, punched or drilled for fasteners, with colors, legend, and size required for application. 1/4-inch grommets in corners for mounting. Nominal size, 7 by 10 inches.

D. Warning label and sign shall include, but are not limited to, the following legends:

1. Multiple Power Source Warning: "DANGER - ELECTRICAL SHOCK HAZARD - EQUIPMENT HAS MULTIPLE POWER SOURCES."
2. Workspace Clearance Warning: "WARNING - OSHA REGULATION - AREA IN FRONT OF ELECTRICAL EQUIPMENT MUST BE KEPT CLEAR FOR 36 INCHES."

2.3 INSTRUCTION SIGNS

A. Engraved, laminated acrylic or melamine plastic, minimum 1/16 inch thick for signs up to 20 sq. in. and 1/8 inch thick for larger sizes.

1. Engraved legend with black letters on white face.
2. Punched or drilled for mechanical fasteners.
3. Framed with mitered acrylic molding and arranged for attachment at applicable equipment.

2.4 EQUIPMENT IDENTIFICATION LABELS

A. Engraved, Laminated Acrylic or Melamine Label: Punched or drilled for screw mounting. White letters on a dark-gray background. Minimum letter height shall be 3/8 inch.

2.5 MISCELLANEOUS IDENTIFICATION PRODUCTS

A. Cable Ties: Fungus-inert, self-extinguishing, 1-piece, self-locking, Type 6/6 nylon cable ties.

1. Minimum Width: 3/16 inch.
2. Tensile Strength: 50 lb, minimum.
3. Temperature Range: Minus 40 to plus 185 deg F.
4. Color: Black, except where used for color-coding.

B. Paint: Paint materials and application requirements are specified in Division 09 painting Sections.

1. Exterior Concrete Unit Masonry:

   a. Semigloss Acrylic-Enamel Finish: Two finish coat(s) over a block filler.

      i. Block Filler: Concrete unit masonry block filler.
      ii. Finish Coats: Exterior semigloss acrylic enamel.

2. Exterior Ferrous Metal:

   a. Semigloss Alkyd-Enamel Finish: Two finish coat(s) over a primer.

      i. Primer: Exterior ferrous-metal primer.
      ii. Finish Coats: Exterior semigloss alkyd enamel.

3. Exterior Zinc-Coated Metal (except Raceways):

      i. Primer: Exterior zinc-coated metal primer.
      ii. Finish Coats: Exterior semigloss alkyd enamel.

4. Interior Ferrous Metal:

   a. Semigloss Acrylic-Enamel Finish: Two finish coat(s) over a primer.

      i. Primer: Interior ferrous-metal primer.
      ii. Finish Coats: Interior semigloss acrylic enamel.

5. Interior Zinc-Coated Metal (except Raceways):

   a. Semigloss Acrylic-Enamel Finish: Two finish coat(s) over a primer.

      i. Primer: Interior zinc-coated metal primer.
      ii. Finish Coats: Interior semigloss acrylic enamel.

C. Fasteners for Labels and Signs: Self-tapping, stainless-steel screws or stainless-steel machine screws with nuts and flat and lock washers.

PART 3 - EXECUTION

3.1 APPLICATION

A. Branch-Circuit Conductor Identification: Where there are conductors for more than three branch circuits in same junction or pull box, use color-coding conductor tape . Identify each ungrounded conductor according to source and circuit number.

B. Conductors to Be Extended in the Future: Attach write-on tags to conductors and list source and circuit number.

C. Auxiliary Electrical Systems Conductor Identification: Identify field-installed alarm, control, signal, sound, intercommunications, voice, and data connections.

   1. Identify conductors, cables, and terminals in enclosures and at junctions, terminals, and pull points. Identify by system and circuit designation.
   2. Use system of marker tape designations that is uniform and consistent with system used by manufacturer for factory-installed connections.
   3. Coordinate identification with Project Drawings, manufacturer's wiring diagrams, and Operation and Maintenance Manual.

D. Warning Labels for Indoor Cabinets, Boxes, and Enclosures for Power and Lighting: Comply with 29 CFR 1910.145 and apply self-adhesive warning labels . Identify system voltage with black letters on an orange background. Apply to exterior of door, cover, or other access.

   1. Equipment with Multiple Power or Control Sources: Apply to door or cover of equipment including, but not limited to, the following:

      a. Power transfer switches.
      b. Controls with external control power connections.

   2. Equipment Requiring Workspace Clearance According to NFPA 70: Unless otherwise indicated, apply to door or cover of equipment but not on flush panelboards and similar equipment in finished spaces.

E. Instruction Signs:

1. Operating Instructions: Install instruction signs to facilitate proper operation and maintenance of electrical systems and items to which they connect. Install instruction signs with approved legend where instructions are needed for system or equipment operation.
2. Emergency Operating Instructions: Install instruction signs with white legend on a red background with minimum 3/8-inch- high letters for emergency instructions at equipment used for power transfer.

F. Equipment Identification Labels: On each unit of equipment, install unique designation label that is consistent with wiring diagrams, schedules, and Operation and Maintenance Manual. Apply labels to disconnect switches and protection equipment, central or master units, control panels, control stations, terminal cabinets, and racks of each system. Systems include power, lighting, control, communication, signal, monitoring, and alarm systems unless equipment is provided with its own identification.

1. Labeling Instructions:

a. Indoor Equipment: Engraved, laminated acrylic or melamine label . Unless otherwise indicated, provide a single line of text with 1/2-inch- high letters on 1-1/2-inch- high label; where 2 lines of text are required, use labels 2 inches high.
b. Outdoor Equipment: Engraved, laminated acrylic or melamine label .
c. Elevated Components: Increase sizes of labels and letters to those appropriate for viewing from the floor.

2. Equipment to Be Labeled:

a. Transformers and sectionalizer.
b. Primary Cabling.
c. Lighting cabinets and light poles

3.2 INSTALLATION

A. Verify identity of each item before installing identification products.

B. Location: Install identification materials and devices at locations for most convenient viewing without interference with operation and maintenance of equipment.

C. Apply identification devices to surfaces that require finish after completing finish work.

D. Self-Adhesive Identification Products: Clean surfaces before application, using materials and methods recommended by manufacturer of identification device.

E. Attach nonadhesive signs and plastic labels with screws and auxiliary hardware appropriate to the location and substrate.

F. Color-Coding for Phase and Voltage Level Identification, 600 V and Less: Use the colors listed below for ungrounded service feeder branch-circuit service, feeder, and branch-circuit conductors.

END OF SECTION 16075

Section 16121 - Medium Voltage Cables

PART 1 - GENERAL

1.1 RELATED DOCUMENTS

A. Drawings and general provisions of the Contract, including General and Supplementary Conditions and Division 01 Specification Sections, apply to this Section.

1.2 SUMMARY

A. Section includes cables and related cable splices, terminations, and accessories for medium-voltage (2001 to 35,000 V) electrical distribution systems.

1.3 DEFINITIONS

A. Jacket: A continuous nonmetallic outer covering for conductors or cables.

B. NETA ATS: Acceptance Testing Specification.

C. Sheath: A continuous metallic covering for conductors or cables.

1.4 ACTION SUBMITTALS

A. Product Data: For each type of cable. Include splices and terminations for cables and cable accessories.

B. Material Certificates: For each type of cable and accessory.

C. Source quality-control reports.

D. Field quality-control reports.

1.5 QUALITY ASSURANCE

A. Installer: Engage a cable splicer, trained and certified by splice material manufacturer, to install, splice, and terminate medium-voltage cable.

1.6 FIELD CONDITIONS

A. Interruption of Existing Electric Service: Do not interrupt electric service to facilities occupied by Owner or others unless permitted under the following conditions and then only after arranging to provide temporary electric service according to requirements indicated:

1) Notify Owner no fewer than 14 days in advance of proposed interruption of electric service.
2) Do not proceed with interruption of electric service without Owner's written permission.

PART 2 - PRODUCTS

2.1 MANUFACTURERS

A. Manufacturers: Subject to compliance with requirements, **provide products by one of the following**:

1. Cables:

   a. Kerite; a Marmon Wire & Cable/Berkshire Hathaway company.
   b. Okonite Company (The).
   c. Southwire Company.

2. Cable Splicing and Terminating Products and Accessories:

   a. Engineered Products Company.
   b. G&W Electric Company.
   c. MP Husky.
   d. RTE Components; Cooper Power Systems, Inc.
   e. Thomas & Betts Corporation.
   f. Thomas & Betts Corporation/Elastimold.
   g. 3M; Electrical Markets Division.
   h. Tyco Electronics; Raychem Products.

B. Source Limitations: Obtain cables and accessories from single source from single manufacturer.

2.2 SYSTEM DESCRIPTION

A. Electrical Components, Devices, and Accessories: Listed and labeled as defined in NFPA 70, by a qualified testing agency, and marked for intended location and application.

B. Comply with IEEE C2 and NFPA 70.

2.3 CABLES

A. Cable Type: Type MV 105.

B. Comply with UL 1072, AEIC CS8, ICEA S-93-639/NEMA WC 74, and ICEA S-97-682.

C. Conductor: Copper.

D. Conductor Stranding: Compact round, concentric lay, Class B.

E. Conductor Insulation: Ethylene-propylene rubber.

1. Voltage Rating: 15kV.
2. Insulation Thickness: 133 percent insulation level.

F. Shielding: Copper tape, helically applied over semiconducting insulation shield.

G. Shielding and Jacket: Corrugated copper drain wires embedded in extruded, chlorinated, polyethylene jacket.

H. Cable Jacket: Sunlight-resistant PVC.

2.4 CONNECTORS

A. Comply with ANSI C119.4 for connectors between aluminum conductors or for connections between aluminum to copper conductors.

B. Copper-Conductor Connectors: Copper barrel crimped connectors.

2.5 SOLID TERMINATIONS

A. Multiconductor Cable Sheath Seals: Type recommended by seal manufacturer for type of cable and installation conditions, including orientation.

1. Compound-filled, cast-metal-body, metal-clad cable terminator for metal-clad cable with external plastic jacket.

2. Cold-shrink sheath seal kit with preformed sleeve openings sized for cable and insulated conductors.

B. Shielded-Cable Terminations: Comply with the following classes of IEEE 48. Insulation class shall be equivalent to that of cable. Include shield ground strap for shielded cable terminations.

1. Class 1 Terminations: Modular type, furnished as a kit, with stress-relief tube; multiple, molded-silicone-rubber, insulator modules; shield ground strap; and compression-type connector.
2. Class 3 Terminations: Kit with stress cone and compression-type connector.

2.6 SEPARABLE INSULATED CONNECTORS

A. Description: Modular system, complying with IEEE 386, with disconnecting, single-pole, cable terminators and with matching, stationary, plug-in, dead-front terminals designed for cable voltage and for sealing against moisture.

B. Terminations at Distribution Points: Modular type, consisting of terminators installed on cables and modular, dead-front, terminal junctions for interconnecting cables.

C. Dead-Front Terminal Junctions: Modular bracket-mounted groups of dead-front stationary terminals that mate and match with above cable terminators. Two-, three-, or four-terminal units as indicated, with fully rated, insulated, watertight conductor connection between terminals and complete with grounding lug, manufacturer's standard accessory stands, stainless-steel mounting brackets, and attaching hardware.

1. Protective Cap: Insulating, electrostatic-shielding, water-sealing cap with drain wire.
2. Portable Feed-Through Accessory: Two-terminal, dead-front junction arranged for removable mounting on accessory stand of stationary terminal junction.
3. Grounding Kit: Jumpered elbows, portable feed-through accessory units, protective caps, test rods suitable for concurrently grounding three phases of feeders, and carrying case.
4. Standoff Insulator: Portable, single dead-front terminal for removable mounting on accessory stand of stationary terminal junction. Insulators suitable for fully insulated isolation of energized cable-elbow terminator.

D. Test-Point Fault Indicators: Applicable current-trip ratings and arranged for installation in test points of load-break separable connectors, and complete with self-resetting indicators capable of being installed with shotgun hot stick and tested with test tool.

2.7 SPLICE KITS

A. Splice Kits: Comply with IEEE 404; type as recommended by cable or splicing kit manufacturer for the application.

B. Splicing Products: As recommended, in writing, by splicing kit manufacturer for specific sizes, materials, ratings, and configurations of cable conductors. Include all components required for complete splice, with detailed instructions.

1. Combination tape and cold-shrink-rubber sleeve kit with rejacketing by cast-epoxy-resin encasement or other waterproof, abrasion-resistant material.

2.8 SOURCE QUALITY CONTROL

A. Test and inspect cables according to ICEA S-97-682 before shipping.

B. Test strand-filled cables for water-penetration resistance according to ICEA T-31-610, using a test pressure of 5 psig (35 kPa).

PART 3 - EXECUTION

3.1 INSTALLATION

A. Install cables according to IEEE 576.

B. Proof conduits prior to conductor installation by passing a wire brush mandrel and then a rubber duct swab through the conduit. Separate the wire brush and the rubber swab by 48 to 72 inches (1200 to 1800 mm) on the pull rope.

1. Wire Brush Mandrel: Consists of a length of brush approximately the size of the conduit inner diameter with stiff steel bristles and an eye on each end for attaching the pull ropes. If an obstruction is felt, pull the brush back and forth repeatedly to break up the obstruction.
2. Rubber Duct Swab: Consists of a series of rubber discs approximately the size of the conduit inner diameter on a length of steel cable with an eye on each end for attaching the pull ropes. Pull the rubber duct swab through the duct to extract loose debris from the duct.

C. Pull Conductors: Do not exceed manufacturer's recommended maximum pulling tensions and sidewall pressure values.

1. Where necessary, use manufacturer-approved pulling compound or lubricant that does not deteriorate conductor or insulation.
2. Use pulling means, including fish tape, cable, rope, and basket-weave cable grips, that do not damage cables and raceways. Do not use rope hitches for pulling attachment to cable.
3. Use pull-in guides, cable feeders, and draw-in protectors as required to protect cables during installation.
4. Do not pull cables with ends unsealed. Seal cable ends with rubber tape.

D. Install exposed cables parallel and perpendicular to surfaces of exposed structural members and follow surface contours where possible.

E. In manholes, handholes, pull boxes, junction boxes, and cable vaults, train cables around walls by the longest route from entry to exit; support cables at intervals adequate to prevent sag.

F. Install sufficient cable length to remove cable ends under pulling grips. Remove length of conductor damaged during pulling.

G. Install cable splices at pull points and elsewhere as indicated; use standard kits. Use dead-front separable watertight connectors in manholes and other locations subject to water infiltration.

H. Install terminations at ends of conductors, and seal multiconductor cable ends with standard kits.

I. Install separable insulated-connector components as follows:

1. Protective Cap: At each terminal junction, with one on each terminal to which no feeder is indicated to be connected.
2. Standoff Insulator: At each terminal junction, with one on each terminal.

J. Ground shields of shielded cable at one point only. Maintain shield continuity and connections to metal connection hardware at all connection points.

K. Identify cables according to Section 16075 "Identification for Electrical Systems." Identify phase and circuit number of each conductor at each splice, termination, pull point, and junction box. Arrange identification so that it is unnecessary to move the cable or conductor to read the identification.

2.9 FIELD QUALITY CONTROL

A. Perform the following tests and inspections with the assistance of a factory-authorized service representative:

1. Perform each visual and mechanical inspection and electrical test stated in NETA ATS. Certify compliance with test parameters.
2. After installing medium-voltage cables and before electrical circuitry has been energized, test for compliance with requirements.
3. Perform direct-current High Potential test of each new conductor according to NETA ATS, Ch. 7.3.3. Do not exceed cable manufacturer's recommended maximum test voltage.

B. Medium-voltage cables will be considered defective if they do not pass tests and inspections.

C. Prepare test and inspection reports.

2.10 Warranty

A. Provide a **forty year** warranty after shipment of cable.

END OF SECTION 16121

Section 16130 – Raceways and Boxes

PART 1 - GENERAL

1.1 RELATED DOCUMENTS

A. Drawings and general provisions of the Contract, including General and Supplementary Conditions and Division 1 Specification Sections, apply to this Section.

1.2 SUMMARY

A. This Section includes raceways, fittings, boxes, enclosures, and cabinets for electrical wiring.

1.3 DEFINITIONS

A. EMT: Electrical metallic tubing.

B. ENT: Electrical nonmetallic tubing.

C. FMC: Flexible metal conduit.

D. IMC: Intermediate metal conduit.

E. LFMC: Liquidtight flexible metal conduit.

F. LFNC: Liquidtight flexible nonmetallic conduit.

G. RNC: Rigid nonmetallic conduit.

1.4 SUBMITTALS

A. Product Data: For surface raceways, floor boxes, and cabinets.

1.5 QUALITY ASSURANCE

A. Electrical Components, Devices, and Accessories: Listed and labeled as defined in NFPA 70, Article 100, by a testing agency acceptable to authorities having jurisdiction, and marked for intended use.

B. Comply with NFPA 70-Latest edition or edition enforced by state and local code authority.

1.6 COORDINATION

A. Coordinate layout and installation of raceways, boxes, enclosures, cabinets, and suspension system with other construction that penetrates ceilings or is supported by them, including light fixtures, HVAC equipment, fire-suppression system, and partition assemblies.

PART 2 - PRODUCTS

2.1 BOXES, ENCLOSURES, AND CABINETS

A. Communications Pull Boxes - Enclosures, boxes and covers are required to conform to all test provisions of the most current ANSI/SCTE 77 “Specification For Underground Enclosure Integrity” for Tier 22 applications. When multiple “Tiers” are specified the boxes must physically accommodate and structurally support compatible covers while possessing the highest Tier rating. All covers are required to have the Tier level rating embossed on the surface. In no assembly can the cover design load exceed the design load of the box. All components in an assembly (box & cover) are manufactured using matched surface tooling. Independent third party verification or test reports stamped by a registered Professional Engineer certifying that all test provisions of this specification have been met are required with each submittal. Cover to labeled per use of box, ie “Electrical, Communications, etc”. Communications pull boxes shall be a minimum of 24" w x 36" l x 36 “ d.

2.2 FACTORY FINISHES

A. Finish: For raceway, enclosure, or cabinet components, provide manufacturer's standard prime-coat finish ready for field painting.

2.3 METAL CONDUIT AND TUBING

A. Rigid Steel Conduit: ANSI C80.1.
B. Aluminum Rigid Conduit: ANSI C80.5.
C. IMC: ANSI C80.6.
D. Plastic-Coated Steel Conduit and Fittings: NEMA RN 1.
E. Plastic Coated IMC and Fittings: NEMA RN 1.
F. EMT and Fittings: ANSI C 80.3.
G. EMT and Fittings: ANSI C80.3.
H. FMC: Aluminum
I. LFMC: Flexible steel conduit with PVC jacket.

J. Fittings: NEMA FB 1; compatible with conduit and tubing materials.

PART 3 - EXECUTION

3.1 RACEWAY APPLICATION

A. Outdoors:

1. Exposed: Rigid steel or IMC.
2. Concealed: Rigid steel or IMC.
3. Underground, Single Run: RNC.
4. Underground, Grouped: RNC.
5. Connection to Vibrating Equipment (Including Transformers and Hydraulic, Pneumatic, Electric Solenoid, or Motor-Driven Equipment): LFMC.
6. Boxes and Enclosures: NEMA 250, Type 4.

B. Indoors:

1. Exposed: EMT in non finished areas. Surface metal raceway in existing finished unaccessible areas unless noted otherwise.
2. Concealed: EMT.
3. Connection to Vibrating Equipment (Including Transformers and Hydraulic, Pneumatic, Electric Solenoid, or Motor-Driven Equipment): FMC; except use LFMC in damp or wet locations.
4. Damp or Wet Locations above Ground: Rigid steel conduit.
5. Boxes and Enclosures: NEMA 250, Type 1, except as follows:

   a. Damp or Wet Locations: NEMA 250, Type 4, stainless steel.

C. Minimum Raceway Size: 3/4-inch trade size (DN 21) below grade and ½ inch trade size above grade.

D. Raceway Fittings: Compatible with raceways and suitable for use and location.

3.2 INSTALLATION

A. Support raceways as specified in Division 16 Section "Basic Electrical Materials and Methods."

B. Install temporary closures to prevent foreign matter from entering raceways.

C. Make bends and offsets so ID is not reduced. Keep legs of bends in the same plane and keep straight legs of offsets parallel, unless otherwise indicated.

D. Install exposed raceways parallel or at right angles to nearby surfaces or structural members and follow surface contours as much as possible.

1. Run parallel or banked raceways together on common supports.
2. Make parallel bends in parallel or banked runs. Use factory elbows only where elbows can be installed parallel; otherwise, provide field bends for parallel raceways.

E. Join raceways with fittings designed and approved for that purpose and make joints tight.

1. Use insulating bushings to protect conductors.

F. Terminations:

1. Where raceways are terminated with locknuts and bushings, align raceways to enter squarely and install locknuts with dished part against box. Use two locknuts, one inside and one outside box.
2. Where raceways are terminated with threaded hubs, screw raceways or fittings tightly into hub so end bears against wire protection shoulder. Where chase nipples are used, align raceways so coupling is square to box; tighten chase nipple so no threads are exposed.

G. Install pull wires in empty raceways. Use polypropylene or monofilament plastic line with not less than 200-lb (90-kg) tensile strength. Leave at least 12 inches (300 mm) of slack at each end of pull wire.

3.3 PROTECTION

A. Provide final protection and maintain conditions that ensure coatings, finishes, and cabinets are without damage or deterioration at time of Substantial Completion.

1. Repair damage to galvanized finishes with zinc-rich paint recommended by manufacturer.
2. Repair damage to PVC or paint finishes with matching touchup coating recommended by manufacturer.

3.4 CLEANING

A. After completing installation of exposed, factory-finished raceways and boxes, inspect exposed finishes and repair damaged finishes.

END OF SECTION 16130

Section 16270 –MEDIUM-VOLTAGE TRANSFORMERS

GENERAL

SUMMARY

This Section includes the following types of transformers with medium-voltage primaries:

Pad-mounted, liquid-filled transformers.

SUBMITTALS

Product Data: Include rated nameplate data, capacities, weights, dimensions, minimum clearances, installed devices and features, location of each field connection, and performance for each type and size of transformer indicated.

Shop Drawings: Wiring and connection diagrams.

Source quality-control test reports.

Follow-up service reports.

Operation and Maintenance Data: For transformer and accessories to include in emergency, operation, and maintenance manuals.

QUALITY ASSURANCE

Electrical Components, Devices, and Accessories: Listed and labeled as defined in NFPA 70, Article 100, by a testing agency acceptable to authorities having jurisdiction, and marked for intended use.

Comply with manufactures testing requirements.

Comply with NFPA 70.

DELIVERY, STORAGE, AND HANDLING

Store transformers so condensation will not form on or in units. Provide temporary heating according to manufacturer's written instructions.

COORDINATION

Coordinate size and location of concrete bases. Cast anchor-bolt inserts into bases. Concrete, reinforcement, and formwork requirements are specified on the drawings.

PRODUCTS

MANUFACTURERS

Available Manufacturers: Subject to compliance with requirements, manufacturers offering products that may be incorporated into the Work include, but are not limited to, the following:

Cooper Industries; Cooper Power Systems Division, Padmount transformers.
Cutler-Hammer, Padmount transformers.
GE Electrical Distribution & Control, Padmount transformers.
Hammond Manufacturing; Transformer Group, Padmount transformers.
Siemens Energy & Automation, Inc, Padmount transformers.

Square D/Groupe Schneider NA, Padmount transformers.

PAD-MOUNTED, LIQUID-FILLED TRANSFORMERS

Description: ANSI C57.12.13, IEEE C57.12.00, IEEE C57.12.22, IEEE C57.12.26, pad-mounted, 2-winding transformers. Stainless-steel tank base and cabinet. Copper winding and copper bus. Impedence between 5.2% and 5.8%. Primary 13,200 volt, Secondary 277/480 volt, KVA as noted on drawings.

Insulating Liquid: Mineral oil, complying with ASTM D 3487, Type II, and tested according to ASTM D 117.

Insulation Temperature Rise: 65 deg C when operated at rated kVA output in a 40 deg C ambient temperature. Transformer shall be rated to operate at rated kilovolt ampere in an average ambient temperature of 30 deg C over 24 hours with a maximum ambient temperature of 40 deg C without loss of service life expectancy.

Basic Impulse Level: 95 kV.

Full-Capacity Voltage Taps: Four 2.5 percent taps, 2 above and 2 below rated high voltage; with externally operable tap changer for de-energized use and with position indicator and padlock hasp.

High-Voltage Switch: 200 amp, make and latch rating of 10KA RMS, symmetrical, arrange for dual feed source (A), OFF, source (B).

Primary Fuses: 150-kV fuse assembly with fuses complying with IEEE C37.47. Rating of current-limiting fuses shall be 50-kA RMS at specified system voltage.

Silver Link Bayonet fuses in series with current limiting fuses.

Surge Arresters: Distribution class, one for each primary phase; complying with IEEE C62.11and NEMA LA 1; support from tank wall within high-voltage compartment. Transformers shall have six arresters for dual radial feed circuits.

High-Voltage Terminations and Equipment: Dead front with universal-type bushing wells for dead-front bushing-well inserts, complying with IEEE 386 and including the following:

Bushing-Well Inserts: One for each high-voltage bushing well, 200 amp.

Surge Arresters: Dead-front, elbow-type, metal-oxide-varistor units.
Parking Stands: One for each high-voltage bushing well.
Portable Insulated Bushings: Arranged for parking insulated, high-voltage, load-break cable terminators; one for each primary feeder conductor terminating at transformer.

Accessories:

Drain Valve: 1 inch (25 mm), with sampling device.
Dial-type thermometer.

Liquid-level gage.
Pressure-vacuum gage.
Pressure Relief Device: Self-sealing with an indicator.
Mounting provisions for low-voltage current transformers.

Meter: Electronic kilowatt-hour/demand measuring to record electricity used and highest peak demand over a time period according to electric utility. Meter is designed for use on the type and rating of circuit indicated for its application. Install meter on transformer.

1. Kilowatt-Hour Display: Digital liquid crystal.
2. Kilowatt-Demand Display: Digital, liquid-crystal type to register highest peak demand.
3. Enclosure: NEMA 250, Type 1, minimum, with hasp for padlocking or sealing.
4. Memory Backup: Self-contained to maintain memory throughout power outages of 72 hours, minimum.
5. Sensors: Current-sensing type, with current or voltage output, selected for optimum range and accuracy for the ratings of the circuits indicated for this application.

a. Type: Solid core.

6. Accuracy: Nationally recognized testing laboratory certified to meet ANSI C12.16 specifications.
7. Demand Signal Communication Interface: Match signal to building automation system input that conveys data on instantaneous/integrated demand level measured by meter used for load switching to control demand. Provide cable, conduit for a complete connection to the building automation system.
8. Provide metering shunt switches to short C.T.'s and open voltage source.
9. Mount meter on transformer.

IDENTIFICATION DEVICES

Nameplates: Engraved, laminated-plastic or metal nameplate for each transformer, mounted with corrosion-resistant screws.

SOURCE QUALITY CONTROL

Factory Tests: Perform design and routine tests according to standards specified for components. Conduct transformer tests according to IEEE C57.12.91.

EXECUTION

EXAMINATION
Examine areas and conditions for compliance with requirements for medium-voltage transformers.

Examine roughing-in of conduits and grounding systems to verify the following:

Wiring entries comply with layout requirements.
Entries are within conduit-entry tolerances specified by manufacturer and no feeders will have to cross section barriers to reach load or line lugs.

Examine walls, floors, roofs, and concrete bases for suitable mounting conditions where transformers will be installed.

Verify that ground connections are in place and that requirements of the NEC have been met. Maximum ground resistance shall be 5 ohms at location of transformer.

Proceed with installation only after unsatisfactory conditions have been corrected.

INSTALLATION
Install transformers on concrete bases.

Anchor transformers to concrete bases according to manufacturer's written instructions.

Construct concrete bases of dimensions indicated, but not less than 4 inches (100 mm) larger in both directions than supported unit and 4 inches (100 mm) high.

Use 3000-psi (20.7-MPa), 28-day compressive-strength concrete and reinforcement as specified in Division 3 Section.

There shall be no exposed earth in transformer pad.

Maintain minimum clearances and workspace at equipment according to manufacturer's written instructions and NFPA 70.

Grounding per NFPA 70.

IDENTIFICATION

Identify field-installed wiring and components and provide warning signs as specified in "Electrical Identification."

CONNECTIONS

Ground equipment according to the NEC.

Connect wiring according to the NEC.

Tighten electrical connectors and terminals according to manufacturer's published torque-tightening values.

FIELD QUALITY CONTROL

Manufacturer's Field Service: Engage a factory-authorized service representative to inspect, test, and adjust field-assembled components and equipment installation, including connections, and to assist in field testing. Report results in writing.

Testing Agency: Engage a qualified testing and inspecting agency to perform the following field tests and inspections and prepare test reports:

Perform the following field tests and inspections and prepare test reports:

After installing transformers but before primary is energized, verify that grounding system at substation is tested at specified value or less.

After installing transformers and after electrical circuitry has been energized, test for compliance with requirements.

Perform electrical test and visual and mechanical inspection per manufactures requirements.

Test and adjust controls and safeties. Replace damaged and malfunctioning controls and equipment.

Remove malfunctioning units, replace with new units, and retest as specified above.

Test Reports: Prepare written reports to record the following:

Test procedures used.
Test results that comply with requirements.
Test results that do not comply with requirements and corrective actions taken to achieve compliance with requirements.

END OF SECTION 16270

SECTION 16513 – EXTERIOR ATHLETIC LIGHTING

PART 1 – GENERAL

1.1 SUMMARY

A. Work covered by this section of the specifications shall conform to the contract documents, engineering plans as well as state and local codes.

B. The purpose of these specifications is to define the lighting system performance and design standards using an LED Lighting source. The manufacturer / contractor shall supply lighting equipment to meet or exceed the standards set forth in these specifications.

C. The sports lighting will be for the following venues:

1. Soccer
2. Volleyball
3. Large Area 1 & 2 (Soccer/Lacrosse)
4. Large Area 1 & 2 (Softball)

E. The primary goals of this sports lighting project are:

1. Guaranteed Light Levels: Selection of appropriate light levels impact the safety of the players and the enjoyment of spectators. Therefore light levels are guaranteed to not drop below specified target values for a period of 10 years.
2. Environmental Light Control: It is the primary goal of this project to minimize spill light to adjoining properties and glare to the players, spectators and neighbors.
3. Life-cycle Cost: In order to reduce the operating budget, the preferred lighting system shall be energy efficient and cost effective to operate. All maintenance costs shall be eliminated for the duration of the warranty.
4. Control and Monitoring: To allow for optimized use of labor resources and avoid unneeded operation of the facility, customer requires a remote on/off control system for the lighting system. Fields should be proactively monitored to detect luminaire outages over a 10-year life cycle. All communication and monitoring costs for 10-year period shall be included in the bid.

1.2 LIGHTING PERFORMANCE

A. Illumination Levels and Design Factors: Playing surfaces shall be lit to an average target illumination level and uniformity as specified in the chart below. Lighting calculations shall be developed and field measurements taken on the grid spacing with the minimum number of grid points specified below. Appropriate light loss factors shall be applied and submitted for the basis of design. Average illumination level shall be measured in accordance with the IESNA LM-5-04 (IESNA Guide for Photometric Measurements of Area and Sports Lighting Installations). Illumination levels shall not to drop below desired target values in accordance to IES RP-6-15, Page 2, Maintained Average Illuminance and shall be guaranteed for the full warranty period.

Area of Lighting	Average Target Illumination Levels	Maximum to Minimum Uniformity Ratio	Grid Points	Grid Spacing
Soccer	20 Footcandles	4.0:1.0	50	30 x 30
Volleyball	20 footcandles	4.0:1.0	136	10 x 10
Large Area 1	28 footcandles	5.0:1.0	143	30 x 30
Large Area 2	28 footcandles	5.0:1.0	143	30 x 30
Large Area Infield 90 foot radius	45 footcandles	4.0:1.0	8	30 x 30

B. Hours of usage: Designs shall be based on the following hours of usage

Area of Lighting	Annual Usage Hours	10 year Usage Hours
Soccer	300	3000
Volleyball	300	3000
Large Area 1	300	3000
Large Area 2	300	3000

C. Color: The lighting system shall have a minimum color temperature of 5700K and a CRI of 75.

D. Mounting Heights: To ensure proper aiming angles for reduced glare and to provide better playability, minimum mounting heights shall be as described below. Higher mounting heights may be required based on photometric report and ability to ensure the top of the field angle is a minimum of 10 degrees below horizontal.

# of Poles	Pole Designation	Pole Height
2	P1 , P8	70’
9	P2 – P7 P9 – P10 P12	80’
1	P11	90’
6	S1 – S4 V1 – V2	60’

E. Provide an average of 0.55 foot candle of light on the sidewalks utilizing lights on the sports poles and added lights indicated on the draawings.

1.3 ENVIRONMENTAL LIGHT CONTROL

A. Light Control Luminaries: All luminaries shall utilize spill light and glare control devices including, but not limited to, internal shields, louvers and external shields. No symmetrical beam patterns are accepted.

B. Spill Light and Glare Control: To minimize impact on adjacent properties, spill light and candela values must not exceed the following.

	Average	Maximum
Property Line Maximum Vertical Footcandles	0.027 fc	.75 fc
Property Line Horizontal Footcandles	0.013 fc	.70 fc
Property Line Max Candela	928.00 Cd	3331.00 Cd

C. Spill Scans: Spill scans must be submitted indicating the amount of horizontal and vertical footcandles along the specified lines. Light levels shall be taken at 30-foot intervals along the boundary line. Readings shall be taken with the meter orientation at both horizontal and aimed towards the most intense bank of lights. Illumination level shall be measured in accordance with the IESNA LM-5-04 after 1 hour warm up.

D. The first page of a photometric report for all luminaire types proposed showing horizontal and vertical axial candle power shall be provided to demonstrate the capability of achieving the specified performance. Reports shall be certified by a qualified independent testing laboratory with a minimum of five years experience or by a manufacturer's laboratory with a current accreditation under the National Voluntary Laboratory Accreditation Program for Energy Efficient Lighting Products. A summary of the horizontal and vertical aiming angles for each luminaries shall be included with the photometric report.

1.4 LIFE-CYCLE COSTS

A. Manufacturer shall submit a 10-year life cycle cost calculation as outlined in the required submittal information.

B. Preventative and Spot Maintenance: Manufacturer shall provide all preventative and spot maintenance, including parts and labor for 10 years from the date of equipment shipment. Individual outages shall be repaired when the usage of any field is materially impacted. Owner agrees to check fuses in the event of a luminaire outage.

PART 2 – PRODUCT

2.1 SPORTS LIGHTING SYSTEM CONSTRUCTION

A. Manufacturing Requirements: All components shall be designed and manufactured as a system. All luminaries, wire harnesses, drivers and other enclosures shall be factory assembled, aimed, wired and tested.

B. Durability: All exposed components shall be constructed of corrosion resistant material and/or coated to help prevent corrosion. All exposed carbon steel shall be hot dip galvanized per ASTM A123. All exposed aluminum shall be powder coated with high performance polyester or anodized. All exterior reflective inserts shall be anodized, coated, and protected from direct environmental exposure to prevent reflective degradation or corrosion. All exposed hardware and fasteners shall be stainless steel of 18-8 grade or better, passivated and coated with aluminum-based thermosetting epoxy resin for protection against corrosion and stress corrosion cracking. Structural fasteners may be carbon steel and galvanized meeting ASTM A153 and ISO/EN 1461 (for hot dipped galvanizing), or ASTM B695 (for mechanical galvanizing). All wiring shall be enclosed within the cross-arms, pole, or electrical components enclosure.

C. System Description: Lighting system shall consist of the following:

1. Galvanized steel poles and cross-arm assembly.

2. Non-approved pole technology:

a. Square static cast concrete poles will not be accepted.

b. Direct bury steel poles which utilize the extended portion of the steel shaft for their foundation will not be accepted due to potential for internal and external corrosive reaction to the soils and long term performance concerns.

3. Pre-stressed concrete base embedded in concrete backfill allowed to cure for 12-24 hours before pole stress is applied. Alternate may be an anchor bolt foundation designed such that the steel pole and any exposed steel portion of the foundation is located a minimum of 18 inches above final grade. The concrete for anchor bolt foundations shall be allowed to cure for a minimum of 28 days before the pole stress is applied unless shorter cure time approved by structural engineer of record.

4. Manufacturers will remote all drivers and supporting electrical equipment in aluminum enclosures mounted approximately 10 feet above grade. The enclosures shall be touch-safe, include surge protection and drivers and fusing with indicator lights on fuses to notify when a fuse is to be replaced for each luminaire. Disconnect per circuit for each pole structure will be located in the enclosure. Integral driver fixtures will not be accepted.

5. Wire harness complete with an abrasion protection sleeve, strain relief and plug-in connections for fast, trouble-free installation.

6. All luminaries, visors, and cross-arm assemblies shall withstand 150 mph winds and maintain luminaries aiming alignment.

7. Control cabinet to provide remote on-off control and monitoring of the lighting system. Cabinet shall be constructed of aluminum, be rated NEMA Type 4 and include surge pretection. Communication method shall be provided by manufacturer. Cabinet shall contain custom configured contactor modules for 30, 60, and 100 amps, labeled to match field diagrams and electrical design. Manual off-on-auto selector switches shall be provided.

8. Lightning Protection: Manufacturer shall provide integrated lightning grounding via concrete encased electrode grounding system as defined by NFPA 780 and be UL Listed per UL 96 and UL 96A. If grounding is not integrated into the structure, the manufacturer shall supply grounding electrodes, copper down conductors, and exothermic weld kits. Electrodes and conductors shall be sized as required by NFPA 780. The grounding electrode shall be minimum size of 5/8 inch diameter and 8 feet long, with a minimum of 10 feet embedment. Grounding electrode shall be connected to the structure by a grounding electrode conductor with a minimum size of 2 AWG for poles with 75 feet mounting height or less, and 2/0 AWG for poles with more than 75 feet mounting height.

D. Safety: All system components shall be UL listed for the appropriate application.

2.2 ELECTRICAL

A. Electric Power Requirements for the Sports Lighting Equipment:

1. Electric power: 480 Volt, 3 Phase

2. Maximum total voltage drop: Voltage drop to the disconnect switch located on the poles shall not exceed five (5) percent of the rated voltage.

2.3 STRUCTURAL PARAMETERS

A. Wind Loads: Wind loads shall be based on the 2012 International Building Code. Wind loads to be calculated using ASCE 7-10, an ultimate design wind speed of 130 mph and exposure category C.

B. Pole Structural Design: The stress analysis and safety factor of the poles shall conform to 2009 AASHTO Standard Specification for Structural Supports for Highway Signs, Luminaries, and Traffic Signals (LTS-5).

C. Foundation Design: The foundation design shall be based on soils that meet or exceed those of a Class 5 material as defined by 2012 IBC Table 1806.2.

2.4 CONTROL

A. Instant On/Off Capabilities: System shall provide for instant on/off of luminaries.

B. Remote Lighting Control System: System shall allow owner and users with a security code to schedule on/off system operation via a web site, phone, fax or email up to ten years in advance. Manufacturer shall provide and maintain a two-way TCP/IP communication link. Trained staff shall be available 24/7 to provide scheduling support and assist with reporting needs.

The owner may assign various security levels to schedulers by function and/or fields. This function must be flexible to allow a range of privileges such as full scheduling capabilities for all fields to only having permission to execute “early off” commands by phone. Scheduling tool shall be capable of setting curfew limits.

Controller shall accept and store 7-day schedules, be protected against memory loss during power outages, and shall reboot once power is regained and execute any commands that would have occurred during outage.

C. Remote Monitoring System: System shall monitor lighting performance and notify manufacturer if individual luminaire outage is detected so that appropriate maintenance can be scheduled. The controller shall determine switch position (manual or auto) and contactor status (open or closed).

D. Management Tools: Manufacturer shall provide a web-based database and dashboard tool of actual field usage and provide reports by facility and user group. Dashboard shall also show current status of luminaries outages, control operation and service. Mobile application will be provided suitable for IOS, Android and Blackberry devices.

Hours of Usage: Manufacturer shall provide a means of tracking actual hours of usage for the field lighting system that is readily accessible to the owner.

1. Cumulative hours: shall be tracked to show the total hours used by the facility

2. Report hours saved by using early off and push buttons by users.

E. Communication Costs: Manufacturer shall include communication costs for operating the controls and monitoring system for a period of 10 years.

F. Lighting contactor cabinet(s) constructed of NEMA Type 4 aluminum, designed for easy installation with custom configured contactor modules for 30, 60, and 100 amps, labeled to match field diagrams and electrical design. Manual off-on-auto selector switches shall be provided.

PART 3 – EXECUTION

3.1 SOIL QUALITY CONTROL

A. It shall be the Contractor's responsibility to notify the Owner if soil conditions exist other than those on which the foundation design is based, or if the soil cannot be readily excavated. Contractor may issue a change order request / estimate for the Owner's approval / payment for additional costs associated with:

1. Providing engineered foundation embedment design by a registered engineer in the State of Louisiana for soils other than specified soil conditions;

2. Additional materials required to achieve alternate foundation;

3. Excavation and removal of materials other than normal soils, such as rock, caliche, etc.

3.2 DELIVERY TIMING

A. Delivery Timing Equipment On-Site: The equipment must be on-site 6-8 weeks from receipt of approved submittals and receipt of complete order information.

3.3 FIELD QUALITY CONTROL

A. Illumination Measurements: Upon substantial completion of the project and in the presence of the Contractor, Project Engineer, Owner's Representative, and Manufacturer's Representative, illumination measurements shall be taken and verified. The illumination measurements shall be conducted in accordance with IESNA LM-5-04.

B. Field Light Level Accountability

1. Light levels are guaranteed not to fall below the target maintained light levels for the entire warranty period of 10 Years.

2. The contractor/manufacturer shall be responsible for an additional inspection one year from the date of commissioning of the lighting system and will utilize a light meter in the presence of the owner.

3. The contractor/manufacturer will be held responsible for any and all changes needed to bring these fields back to compliance for light levels and uniformities. Contractor/Manufacturer will be held responsible for any damage to the fields during these repairs.

C. Correcting Non-Conformance: If, in the opinion of the Owner or his appointed Representative, the actual performance levels including footcandles and uniformity ratios are not in conformance with the requirements of the performance specifications and submitted information, the Manufacturer shall be required to make adjustments to meet specifications and satisfy Owner.

3.4 WARRANTY AND GUARANTEE

A. 10-Year Warranty: Each manufacturer shall supply a signed warranty covering the entire system for 10 years from the date of shipment. Warranty shall guarantee specified light levels. Manufacturer shall maintain specifically-funded financial reserves to assure fulfillment of the warranty for the full term. Warranty does not cover weather conditions events such as lightning or hail damage, improper installation, vandalism or abuse, unauthorized repairs or alterations, or product made by other manufacturers.

B. Maintenance: Manufacturer shall monitor the performance of the lighting system, including on/off status, hours of usage and luminaries outage for 10 years from the date of equipment shipment. Individual luminaries outages shall be repaired when the usage of any field is materially impacted. Owner agrees to check fuses in the event of a luminaire outage.

PART 4 – DESIGN APPROVAL

4.0 BID SUBMITTAL REQUIREMENTS

A. Design Approval: The owner / engineer will review bid submittals per section 4.0.B from all the manufacturers to ensure compliance to the specifications.

B. The contractor shall submit the “Required Submittal Information” within 10 days of the bid. Non-receipt of submittal or non-conformance to the specifications shall be grounds for rejection of the bid.

REQUIRED SUBMITTAL INFORMATION FOR ALL MANUFACTURERS

All items listed below are mandatory, shall comply with the specifications and be submitted according to bid submittal requirements. Complete the Yes/No column to indicate compliance (Y) or noncompliance (N) for each item. ***Submit checklist below with submittal.***

Yes / No	Tab	Item	Description
	A	Letter/ Checklist	Listing of all information being submitted must be included on the table of contents. List the name of the manufacturer's local representative and his/her phone number. Signed submittal checklist to be included.
	B	Equipment Layout	Drawing(s) showing field layouts with pole locations
	C	On Field Lighting Design	Lighting design drawing(s) showing: a. Field Name, date, file number, prepared by b. Outline of field(s) being lighted, as well as pole locations referenced to the center of the field (x & y), Illuminance levels at grid spacing specified c. Pole height, number of fixtures per pole, horizontal and vertical aiming angles, as well as luminaire information including wattage, lumens and optics d. Height of light test meter above field surface. e. Summary table showing the number and spacing of grid points; average, minimum and maximum illuminance levels in foot candles (fc); uniformity including maximum to minimum ratio, coefficient of variance (CV), coefficient of utilization (CU) uniformity gradient; number of luminaries, total kilowatts, average tilt factor; light loss factor.
	D	Off Field Lighting Design	Lighting design drawing showing initial spill light levels along the boundary line (defined on bid drawings) in foot candles. Light levels shall be taken at 30-foot intervals along the boundary line. Readings shall be taken with the meter orientation at both horizontal and aimed towards the most intense bank of lights.
	E	Environmental Light Control Design	Environmental glare impact scans must be submitted showing the maximum candela from the field edge on a map of the surrounding area until 500 candela or less is achieved.
	F	Photometric Report	Provide first page of photometric report for all luminaire types being proposed showing candela tabulations as defined by IESNA Publication LM-35-02. Photometric data shall be certified by laboratory with current National Voluntary Laboratory Accreditation Program or an independent testing facility with over 5 years experience.
	G	Performance Guarantee	Provide performance guarantee including a written commitment to undertake all corrections required to meet the performance requirements noted in these specifications at no expense to the owner. Light levels must be guaranteed to not fall below target levels for warranty period.
	H	Structural Calculations	Pole structural calculations and foundation design showing foundation shape, depth backfill requirements, rebar and anchor bolts (if required). Pole base reaction forces shall be shown on the foundation drawing along with soil bearing pressures. Design must be stamped by a structural engineer in the state of Louisiana, if required by owner

	I	Control & Monitoring System	Manufacturer of the control and monitoring system shall provide written definition and schematics for automated control system to include monitoring. They will also provide ten (10) references of customers currently using proposed system in the state of Louisiana.
	J	Warranty	Provide written warranty information including all terms and conditions. Provide ten (10) references of customers currently under specified warranty in the state of Louisiana.
	K	Project References	Manufacturer to provide a list of five (5) projects where the technology and specific fixture proposed for this project has been installed in the state of Louisiana or surrounding states. Reference list will include project name, project city, installation date, and if requested, contact name and contact phone number.
	L	Product Information	Complete bill of material and current brochures/cut sheets for all product being provided.
	M	Delivery	Manufacturer shall supply an expected delivery timeframe from receipt of approved submittals and complete order information.
	N	Non-Compliance	Manufacturer shall list all items that do not comply with the specifications. If in full compliance, tab may be omitted.
	P	Life-cycle Cost Calculation	Document life-cycle cost calculations as defined in the specification. Identify energy costs for operating the luminaires. Maintenance cost for the system must be included in the warranty. All costs should be based on 10 Years. (complete table below)

10-Year Life Cycle Operating Cost			
a.	**Luminaire energy consumption** _____ luminaires x _____ kW demand per luminaire x _____ kWh rate x 300 annual usage hours x 10 years		
b.	**Demand charges, if applicable**	+	
c.	**Cost for maintenance, not covered, for 10 years** Assume _____ repairs at _____ each if not included with the bid	+	
	TOTAL 10 -Year Life-cycle Operating Cost	=	

The information supplied herein shall be used for the purpose of complying with the specifications for University of Louisiana Lafayette Intramural Fields. By signing below I agree that all requirements of the specifications have been met and that the manufacturer will be responsible for any future costs incurred to bring their equipment into compliance for all items not meeting specifications and not listed in the Non-Compliance section.

Manufacturer: _____ **Signature:** _____

Contact Name: _____ **Date:** _____/_____/_____

Contractor: _____ **Signature:** _____

LOUISIANA UNIFORM PUBLIC WORKS BID FORM

TO: University of Louisiana at Lafayette
Purchasing Office, Martin Hall Room 123
104 University Circle
PO Box 40197
Lafayette, LA 70504
(Owner to provide name and address of owner)

BID FOR: Intramural Field Lighting

File 17201

The undersigned bidder hereby declares and represents that she/he: a) has carefully examined and understands the Bidding Documents, b) has not received, relied on, or based his bid on any verbal instructions contrary to the Bidding Documents or any addenda, c) has personally inspected and is familiar with the project site, and hereby proposes to provide all labor, materials, tools, appliances and facilities as required to perform, in a workmanlike manner, all work and services for the construction and completion of the referenced project, all in strict accordance with the Bidding Documents prepared by:

UNIVERSITY OF LOUISIANA AT LAFAYETTE and dated: JUNE 2016.

Bidder must acknowledge all addenda. The Bidder acknowledges receipt of the following ADDENDA: (Enter the number the Designer has assigned to each of the addenda that the Bidder is acknowledging) _____

TOTAL BASE BID: For all work required by the Bidding Documents (including any and all unit prices designated "Base Bid"* but not alternates) the sum of:

_____ Dollars ($_____)

ALTERNATES: For any and all work required by the Bidding Documents for Alternates including any and all unit prices designated as alternates in the unit price description.

Alternate No. 1 *(Owner to provide description of alternate and state whether add or deduct)* for the lump sum of:
N/A Dollars ($_____)

Alternate No. 2 *(Owner to provide description of alternate and state whether add or deduct)* for the lump sum of:
N/A Dollars ($_____)

Alternate No. 3 *(Owner to provide description of alternate and state whether add or deduct)* for the lump sum of:
N/A Dollars ($_____)

NAME OF BIDDER: _____

ADDRESS OF BIDDER: _____

_____

LOUISIANA CONTRACTOR'S LICENSE NUMBER: _____

NAME OF AUTHORIZED SIGNATORY OF BIDDER: _____

TITLE OF AUTHORIZED SIGNATORY OF BIDDER: _____

SIGNATURE OF AUTHORIZED SIGNATORY OF BIDDER**: _____

DATE: _____

* The **Unit Price Form** shall be used if the contract includes unit prices. Otherwise, it is not required and need not be included with the form. The number of unit prices that may be included is not limited and additional sheets may be included if needed.

** If someone other than a corporate officer signs for the Bidder/Contractor, a copy of a corporate resolution or other signature authorization shall be required for submission of bid. Failure to include a copy of the appropriate signature authorization, if required, may result in the rejection of the bid unless bidder has complied with La. R.S. 38:2212(A)(1)(c) or RS 38:2212(0).

BID SECURITY in the form of a bid bond, certified check or cashier's check as prescribed by LA RS 38:2218.A is attached to and made a part of this bid.

Louisiana Register Vol. 35, No. 08 August 20, 2009.

NOTE: Affidavit submitted with the Bid Documents, prior to the opening of bids, will not be accepted in accordance with LA. R.S. 38:2212.10.

_____	_____
Name of Project	**Project No.**

STATE OF _____

PARISH OF _____

ATTESTATIONS AFFIDAVIT

Before me, the undersigned notary public, duly commissioned and qualified in and for the parish and state aforesaid, personally came and appeared Affiant, who after being duly sworn, attested as follows:

LA. R.S. 38:2227 PAST CRIMINAL CONVICTIONS OF BIDDERS

A. No sole proprietor or individual partner, incorporator, director, manager, officer, organizer, or member who has a minimum of a ten percent (10%) ownership in the bidding entity named below has been convicted of, or has entered a plea of guilty or nolo contendere to any of the following state crimes or equivalent federal crimes:

(a) Public bribery (R.S. 14:118)
(b) Corrupt influencing (R.S. 14:120)
(c) Extortion (R.S. 14:66)
(d) Money laundering (R.S. 14:23)

B. Within the past five years from the project bid date, no sole proprietor or individual partner, incorporator, director, manager, officer, organizer, or member who has a minimum of a ten percent (10%) ownership in the bidding entity named below has been convicted of, or has entered a plea of guilty or nolo contendere to any of the following state crimes or equivalent federal crimes, during the solicitation or execution of a contract or bid awarded pursuant to the provisions of Chapter 10 of Title 38 of the Louisiana Revised Statutes:

(a) Theft (R.S. 14:67)
(b) Identity Theft (R.S. 14:67.16)
(c) Theft of a business record (R.S.14:67.20)
(d) False accounting (R.S. 14:70)
(e) Issuing worthless checks (R.S. 14:71)
(f) Bank fraud (R.S. 14:71.1)
(g) Forgery (R.S. 14:72)
(h) Contractors; misapplication of payments (R.S. 14:202)
(i) Malfeasance in office (R.S. 14:134)

LA. R.S. 38:2212.10 Verification of Employees

A. At the time of bidding, Appearer is registered and participates in a status verification system to verify that all new in the state of Louisiana are legal citizens of the United States or are legal aliens.

B. If awarded the contract, Appearer shall continue, during the term of the contract, to utilize a status verification system to verify the legal status of all new employees in the state of Louisiana.

C. If awarded the contract, Appearer shall require all subcontractors to submit to it a sworn affidavit verifying compliance with Paragraphs (A) and (B) of this Subsection.

_____ _____

Name of Project **Project No.**

LA. R.S. 23:1726(B) Certification Regarding Unpaid Workers Compensation Insurance

A. R.S. 23:1726 prohibits any entity against whom an assessment under Part X of Chapter 11 of Title 23 of the Louisiana Revised Statutes of 1950 (Alternative Collection Procedures & Assessments) is in effect, and whose right to appeal that assessment is exhausted, from submitting a bid or proposal for or obtaining any contract pursuant to Chapter 10 of Title 38 of the Louisiana Revised Statutes of 1950 and Chapters 16 and 17 of Title 39 of the Louisiana Revised Statutes of 1950.

B. By signing this bid /proposal, Affiant certifies that no such assessment is in effect against the bidding / proposing entity.

_____ _____

NAME OF BIDDER **NAME OF AUTHORIZED SIGNATORY OF BIDDER**

_____ _____

DATE **TITLE OF AUTHORIZED SIGNATORY OF BIDDER**

_____

SIGNATURE OF AUTHORIZED
SIGNATORY OF BIDDER/AFFIANT

Sworn to and subscribed before me by Affiant on the _____ day of _____ , 20___ .

_____

Notary Public

SITE ENGINEERING, INC.
SELECTION ▪ INVESTIGATION ▪ TESTING ▪ ENGINEERING
650 ALBERTSON PARKWAY ▪ BROUSSARD, LA 70518
PHONE 337-981-1414
FAX 337-981-1402

December 3, 2014

The University of Louisiana at Lafayette
c/o Mr. Eric Cozier
Abell+Crozier+Davis Architects
115 East Main Street
Lafayette, Louisiana 70501

RE: Geotechnical Engineering Services Report
Proposed UL Lafayette Intramural Sports Facility
Coliseum Road
Lafayette, Louisiana
SITE Engineering Project: 14-G119-01

Gentlemen,

SITE Engineering, Inc. is pleased to transmit our Geotechnical Investigation Services Report for the above referenced project. The investigation was performed in accordance with SITE Engineering Proposal Number 14-249G dated October 6, 2014. Our services were authorized by Mr. William Crist of the University of Louisiana at Lafayette on October 20, 2014 by signing the AIA document prepared by Abell+Crozier+Davis Architects.

The purpose of this exploration was to investigate the existing subsurface conditions at the site and analyze these conditions for support of the proposed structure. This report includes the results of our field and laboratory testing and provides recommendations for site preparation, foundation and pavement design, and construction.

We appreciate the opportunity to provide our services to your project and look forward to working with you in the future. If you have any questions pertaining to this report, or if we may be of further service, please do not hesitate to contact our office.

Sincerely,
SITE ENGINEERING, INC.

Clint S. McDowell, P.E.
President

Distribution: 3 – Above

SITE ENGINEERING, INC.

GEOTECHNICAL ENGINEERING SERVICES REPORT

PROPOSED UL LAFAYETTE INTRAMURAL SPORTS FACILITY
COLISEUM ROAD
LAFAYETTE, LOUISIANA

SITE ENGINEERING REPORT NUMBER: 14-G119-01

Prepared For

The University of Louisiana at Lafayette
c/o Mr. Eric Crozier
Abell+Crozier+Davis Architects
115 East Main Street
Lafayette, Louisiana 70501

December 3, 2014

By

SITE ENGINEERING, INC.
650 Albertson Parkway
Broussard, LA 70518
(337) 981-1414

Jarod J. Breaux, P.E. (#39061)
Project Engineer

Clint S. McDowell, P.E. (#27983)
President

TABLE OF CONTENTS

1.0 EXECUTIVE SUMMARY 1

2.0 PROJECT INFORMATION 2

2.1 PROJECT AUTHORIZATION 2
2.2 PROJECT DESCRIPTION 2
2.3 PURPOSE AND SCOPE OF SERVICES 2

3.0 SITE AND SUBSURFACE CONDITIONS 4

3.1 PROJECT LOCATION AND SITE DESCRIPTION 4
3.2 SUBSURFACE CONDITIONS 4
3.3 GROUNDWATER INFORMATION 5

4.0 EVALUATION AND RECOMMENDATIONS 6

4.1 GENERAL 6
4.2 POTENTIAL VOLUMETRIC CHANGE 6
4.3 SITE PREPARATION 7
4.4 SHALLOW FOUNDATION RECOMMENDATIONS 8
4.5 UPLIFT RESISTANCE OF SHALLOW FOUNDATION ELEMENTS 10
4.6 OTHER FOUNDATION TYPES 10
4.7 FLOOR SLAB RECOMMENDATIONS 10

5.0 PAVEMENT RECOMMENDATIONS 12

6.0 CONSTRUCTION CONSIDERATIONS 15

6.1 UTILITY LINES 15
6.2 CONSTRUCTION TESTING AND INSPECTION 15
6.3 MOISTURE SENSITIVE SOILS/WEATHER RELATED CONCERNS 16
6.4 DRAINAGE AND GROUNDWATER CONCERNS 16
6.5 EXCAVATIONS 16

7.0 REPORT LIMITATIONS 18

APPENDIX
ESTIMATED SETTLEMENT VS. SQUARE FOOTING SIZE
BORING LOCATION DIAGRAMS
KEY TO TERMS AND SYMBOLS USED ON LOG
BORING LOG (B-1 & B-2)

1.0 EXECUTIVE SUMMARY

SITE Engineering, Inc. has completed an exploration and evaluation of the subsurface conditions for the proposed intramural sports facility for the University of Louisiana at Lafayette to be constructed on Coliseum Road in Lafayette, Louisiana. The project will consist of the construction of a new single-story building. The plan area of the proposed building is unknown at this time. Furthermore, the proposed type of construction is also unknown at this time. However, it is assumed to consist of load-bearing, concrete block walls or structural steel framing with a brick veneer exterior finish. We have assumed the floor slab will be constructed at-grade. Pavement areas to provide parking for passenger vehicles and associated drives will also be constructed adjacent to the proposed building.

The subsurface conditions at the subject site were explored by the performance of soil test borings. Our scope of services included drilling two (2) borings to a depth of 30 feet below the existing ground surface. The borings generally encountered 7 to 8 inches of lean clay topsoil followed by very stiff fat clay soils to a depth of about 4 feet. Below this depth, the borings encountered stiff to firm lean clay soils to depths ranging from 12 to 20 feet followed by stiff to very stiff fat clay soils extending to a depth of at least 30 feet, the maximum depth explored. It should be noted that the soils encountered within the upper 2 feet of boring B-1 are considered moderately desiccated.

Groundwater was not encountered during the drilling operations within the depths explored by the borings performed at this site. Immediately after completion of the drilling and prior to demobilization of our drilling equipment, the boreholes were grouted with a cement-bentonite mixture as required by state regulations. Therefore, delayed groundwater measurements were not possible. The boring logs included in the appendix of this report should be reviewed for specific soil and groundwater information at each boring location.

The near surface clay soils encountered in the borings performed at this site are considered good in strength and support capabilities but are considered moderate in shrink/swell potential. However, provided the site preparation recommendations presented in this report are followed, the planned structure may be supported on a relatively shallow foundation system consisting of isolated spread footings, continuous wall footings, and interior grade beams. Recommendations are also being provided for both flexible and rigid pavement systems. Details related to site development, foundation and pavement design, and construction considerations are included in subsequent sections of this report.

The owner/designer should not rely solely on this Executive Summary and must read and evaluate the entire contents of this report prior to utilizing our engineering recommendations in preparation of design/construction documents.

2.0 PROJECT INFORMATION

2.1 Project Authorization

SITE Engineering, Inc. has completed a geotechnical exploration for the proposed intramural sports facility for the University of Louisiana at Lafayette to be constructed on Coliseum Road in Lafayette, Louisiana. The investigation was performed in accordance with SITE Engineering Proposal Number 14-249G dated October 6, 2014. Our services were authorized by Mr. William Crist of the University of Louisiana at Lafayette on October 20, 2014 by signing the AIA document prepared by Abell+Crozier+Davis Architects.

2.2 Project Description

The project will consist of the construction of a new single-story building. The plan area of the proposed building is unknown at this time. Furthermore, the proposed type of construction is also unknown at this time. However, it is assumed to consist of load-bearing, concrete block walls or structural steel framing with a brick exterior veneer. We have assumed the floor slab will be constructed at-grade. Structural loads associated with the proposed structure have also not been provided at this time. However, for purposes of this report, maximum column loads are anticipated to be no greater than 30 kips in compression and/or tension (uplift). Wall loads should be 4 kips per linear foot or less.

Pavement areas to provide parking for passenger vehicles and associated drives will be constructed adjacent to the proposed building. Traffic loading information including the types of vehicles and frequencies has not been provided at this time. However, it is anticipated that traffic will consist mainly of passenger vehicles with weekly passes of larger vehicles such as delivery trucks and garbage collection vehicles.

Existing site grades and proposed finished elevations have not been provided at this time. However, we have assumed that less than 2 feet of fill will be required to reach design grade within the proposed building construction area. The pavement areas are expected to be constructed at or very near existing site grades and, therefore, should require less than about 18 inches of cut and/or fill to reach design elevation.

The geotechnical recommendations presented in this report are based on the available project information, proposed structure location, and the subsurface materials encountered in the borings and as described in this report. If any of the noted information is incorrect, please inform SITE Engineering in writing so that we may amend the recommendations presented in this report if appropriate and if desired by the client. SITE Engineering will not be responsible for the implementation of recommendations in this report if not notified of changes in the project.

2.3 Purpose and Scope of Services

The purpose of this geotechnical investigation was to explore the subsurface conditions at the site to enable an evaluation of acceptable foundation and pavement systems for the proposed project. Our scope of services included drilling two (2) soil test borings to a depth of 30 feet below the existing ground surface, select laboratory testing of the sampled subsurface soils, and preparation of this geotechnical report. This report briefly outlines the testing procedures, presents available project information, describes the site and subsurface conditions, and presents general recommendations regarding the following:

- Foundation type and bearing depths for the proposed structure;
- Estimates of settlements for the recommended foundation type;
- Recommendations for utility trenches and excavations;
- General pavement design and pavement subgrade preparation criteria, and;
- Recommendations for general site preparation including topsoil and unstable soil removal and imported structural fill criteria and compaction requirements.

Our services did not include an environmental assessment for determining the presence or absence of wetlands, or hazardous or toxic materials in the soil, surface water, groundwater, or air on or below, or around this site. Any statements in this report or on the boring logs regarding odors, colors, and unusual or suspicious items or conditions are strictly for informational purposes. Prior to development of this site, an environmental assessment is advisable.

3.0 SITE AND SUBSURFACE CONDITIONS

3.1 Project Location and Site Description

The site for the proposed intramural sports facility is located on Coliseum Road in Lafayette, Louisiana. The subject site was observed to be bordered by Coliseum Road to the west; by grass covered land to the north and south, and; by a tree line followed by residential structures to the east.

At the time of the field exploration, the proposed site was covered with short grass. A few drainage catch basins were also present within the proposed construction areas. It is assumed these features will be removed to facilitate construction. The surface of the site was generally dry and in a firm condition. Our all-terrain drilling rig and support pick-up truck experienced little to no difficulty in accessing the boring locations.

Existing site topographic information was not provided. However, based on visual observations, the subject property appear to be relatively level with little elevation difference between high and low points within the areas intended for construction.

3.2 Subsurface Conditions

The subsurface conditions were explored with two (2) borings drilled to a depth of 30 feet within the footprint of the proposed structure. The number and depth of the borings were determined by Abell+Crozier+Davis Architects. The locations of the borings were determined by SITE Engineering, Inc. The borings were located on the subject site by a representative of SITE Engineering utilizing a surveyor's wheel based on a preliminary site development plan provided by Abell+Crozier+Davis Architects. The approximate location of each boring can be seen on the boring location diagram provided in the appendix of this report.

The borings were advanced utilizing continuous flight auger drilling techniques. Soil samples were obtained continuously in the upper ten feet of the borings and on five-foot centers thereafter to the boring completion depths. Drilling and sampling methods were accomplished in general accordance with ASTM procedures. Upon completion of the drilling, the boreholes were grouted with a cement-bentonite mixture as required by state regulations.

Undisturbed samples of cohesive soils were obtained using thin-wall tube sampling procedures in general accordance with the procedures for "Thin-Walled Tube Geotechnical Sampling of Soils" (ASTM D-1587). These samples were extruded in the field with a hydraulic ram. Undisturbed samples were identified according to boring number and depth, were placed in polyethylene plastic wrapping to protect against moisture loss, and were transported to the laboratory in special containers to prevent disturbance.

In addition to the field exploration, a supplemental laboratory-testing program was conducted to evaluate additional pertinent engineering characteristics of the subsurface materials necessary in analyzing the behavior of the foundation system for the proposed project. The laboratory-testing program included supplementary visual classification and water content tests on all soil samples. In addition, selected samples were subjected to unconfined compressive strength testing and Atterberg Limits determinations. Additional estimates of shear strength were also determined through the use of a hand torvane and pocket penetrometer.

The borings generally encountered 7 to 8 inches of lean clay topsoil followed by very stiff fat clay soils to a depth of about 4 feet. Below this depth, the borings encountered stiff to firm lean clay soils to depths ranging from 12 to 20 feet followed by stiff to very stiff fat clay soils to a depth of at least 30 feet, the maximum depth explored. It should be noted that the soils encountered within the upper 2 feet of boring B-1 are considered moderately desiccated. This is a condition where the natural moisture content of the soil is less than its plastic limit.

The above subsurface description is of a generalized nature to highlight the major subsurface stratification features and material characteristics. The boring logs included in the appendix should be reviewed for specific subsurface information at individual boring locations. These records include soil descriptions, stratifications, locations of the samples and laboratory test data. The stratifications shown on the boring logs represent the conditions only at the actual boring locations. Variations may occur and should be expected between boring locations and elsewhere on the site. The stratifications represent the approximate boundary between subsurface materials and the actual transition may be gradual. The samples which were not altered by laboratory testing will be retained for 60 days from the date of this report and then discarded.

3.3 Groundwater Information

Groundwater was not encountered during the drilling operations within the depths explored by the borings performed at this site. Immediately after completion of the drilling and prior to demobilization of our drilling equipment, the boreholes were grouted with a cement-bentonite mixture as required by the regulations of the Louisiana Department of Natural Resources. Therefore, delayed groundwater measurements were not possible. The boring logs included in the appendix of this report should be reviewed for specific soil and groundwater information at each boring location.

The groundwater information provided above were the levels recorded at the time of our field investigation. In addition, it may take several days for the groundwater level to become static in an open borehole. Therefore, it should be noted, that it is possible for a groundwater table to be present at a later time depending upon climatic and rainfall conditions. It is highly recommended that the Contractor determine the actual groundwater levels at the site at the time of the construction activities.

4.0 EVALUATION AND RECOMMENDATIONS

4.1 General

The type and depth of foundation suitable for a given structure primarily depends on several factors including the subsurface conditions, the function of the structure, the loads it may carry, the cost of the foundation and the criteria set by the Design Engineer with respect to vertical and differential movement which the structure can withstand without damage. The near surface clay soils encountered in the borings performed at this site are considered good in strength and support capabilities but are considered moderate in shrink/swell potential. However, provided the site preparation recommendations presented in this report are followed, the planned structure may be supported on a relatively shallow foundation system consisting of isolated spread footings, continuous wall footings, and interior grade beams. Specific details related to foundation design and construction considerations will be presented in subsequent paragraphs.

4.2 Potential Volumetric Change

Field and laboratory test results indicate that soils which exhibit a moderate shrink/swell potential were present below the surface in the borings performed at this site. Swelling of these expansive soils will likely occur with changes in moisture content. The estimated amount of vertical movement of a foundation or floor slab constructed on swelling clays or expansive soils is referred to as the Potential Vertical Rise (PVR). To reduce the potential for swelling of the site soils, it is important that consideration be given to reducing the potential for moisture changes of these soils. At a minimum, positive drainage away from the new structure should be provided. If positive drainage is not provided, water will pond around or below the building and excessive total and differential movements may occur.

Movements may also be caused by shrinkage of the underlying clay soils due to evapo-transpiration which is the loss of water due to evaporation and transpiration during periods of dry weather. In periods where the loss of moisture in the soil is greater than precipitation, drying of the soils will occur. As the moderate to highly plastic clay soils dry, they will also shrink. The amount of drying and subsequent shrinkage is generally greater at the edge of a building and less towards the center, thereby causing undesirable differential movements.

The PVR of the site soils was calculated using the method developed by the American Association of State Highway and Transportation Officials (AASHTO). This method assumes a linear variation of percent swell with depth where the percent swell is maximum at the ground surface and zero at the bottom of the active depth. The active depth in the project area is generally about 6 to 8 feet. This method of estimating PVR is considered appropriate for normal soil moisture variations due to weather conditions in this area. A computer program based on the Texas Department of Transportation Method TEX-124-E of analysis was also utilized to further model the site development characteristics and determine volume change potential after site remediation.

A PVR value of about 1½ inches was calculated for the soil conditions encountered in the borings. This magnitude of volume change is considered moderate and is anticipated to be intolerable for the proposed grade-supported structure. Based on our analyses, it is recommended that at least 24 inches of low plasticity structural fill be provided beneath the new building floor slab. Providing 24 inches of low plasticity structural fill beneath the new floor slab will decrease the estimated PVR value to about one inch or less. The 2 feet of low plasticity soil should extend a minimum of 5 feet beyond the perimeter of the new building footprint.

The required thickness of low plasticity material can be achieved by undercutting and replacing the upper 24 inches of naturally occurring soils, by raising the site at least 24 inches above existing grade with low plasticity structural fill, or by a combination of these alternatives. Greater thicknesses of low plasticity soil placed beneath the floor slab will further reduce the potential volumetric change. However, SITE Engineering, Inc. should be contacted to determine the effects of the increase in fill thickness if more than two (2) feet of fill will be placed above current site grade.

As previously mentioned, swelling or shrinkage occurs in soils due to changes in moisture content. Ponding of water around the slab may also result in reduction of soil strength, thereby causing movements. It is important to minimize the possibility of moisture content changes by considering the following precautions:

1. Direct surface runoff away from the structure by sloping the subgrade away from the slab.

2. Extend paving or other impervious covering, such as sidewalks, to the slab edges.

3. Extend downspouts so that the discharge is at least 5 feet from the slab.

4. Further increase fill thickness under the slab.

5. If shrubs or bushes are placed next to the structure, an impervious membrane should be used to separate the slab from the shrubs to limit any infiltration of water under the slab. The minimum distance between a tree and the building slab should be about one-half the expected height of the tree.

6. Provide adequate irrigation during periods of drought to minimize excessive drying of the subgrade soils around the perimeter of the building.

7. Extend perimeter footings deeper into the natural subgrade soils to provide a vertical barrier against moisture transferal.

4.3 Site Preparation

We recommend that all existing utilities, topsoil, organics, and any soft, loose or deleterious soils in the areas intended for construction and for a distance of at least 5 feet beyond the perimeter of the proposed structure be stripped from the site and either wasted or stockpiled for later use in landscaping. Based on the borings performed, the depth of stripping necessary to ensure removal of all excessively organic or otherwise deleterious materials will be on the order of about 8 inches. However, the actual stripping depth should be verified and monitored by the geotechnical engineer at the time of construction to ensure adequate removal of deleterious materials.

After stripping as described above and excavation to the proposed subgrade level, all areas intended for construction should be proof-rolled with a loaded tandem axle dump truck or similar heavy rubber tired vehicle weighing approximately 10 to 12 tons. Soils which are observed to rut or deflect excessively under the moving load should be further undercut and replaced with properly compacted structural fill. The proof-rolling, undercutting and filling activities should be witnessed by a representative of the geotechnical engineer and should be performed during a period of dry weather. Chemical treatment by the addition of the lime could also be used to dry and strengthen soft, saturated or unstable subgrade soils. If a chemical treatment option is desirable, SITE Engineering should be contacted to provide additional recommendations.

After subgrade preparation and observation have been completed, fill placement may begin. The first layer of fill should be placed in a relatively uniform horizontal lift and be adequately keyed into the stripped and scarified subgrade soils. Structural fill soils should be free of organic or other deleterious materials, have a maximum particle size less than 2 inches, a liquid limit of 42 or less, a plasticity index between 10 and 22, and classify as CL in accordance with the Unified Soil Classification System (ASTM D-2487). Soils which classify as ML (silts) are not recommended for use as structural fill due to their moisture sensitive nature. Sands or soil with less than 50 percent fines (materials passing a number 200 sieve) should not be used as structural fill on this site due to permeable nature of these soils and the swell potential of the existing site soils.

All structural fill within the proposed construction areas and for a distance of at least 5 feet beyond the building perimeter and 2 feet beyond the perimeters of pavement systems should be compacted to at least 95 percent of the maximum dry density as determined by ASTM D-698 (standard Proctor). Structural fill should be placed in maximum lifts of 8 to 9 inches of loose material. The moisture content at the time of compaction should be within a range of one percentage point below to three percentage points above the optimum moisture content value as determined by ASTM D-698.

Close moisture content control will be required to achieve the recommended degree of compaction. If water must be added, it should be uniformly applied and thoroughly mixed into the soil by disking or scarifying. Each lift of compacted structural fill should be tested by a qualified geotechnical engineer or his representative prior to placement of subsequent lifts. The edges of compacted structural fill should extend at least 5 feet beyond the perimeter of the new building and 2 feet beyond the edges of pavements prior to sloping. Care should be taken to apply compactive effort throughout the structural fill and structural fill slope areas.

We also recommend that water not be allowed to collect in the foundation excavations, floor slab areas, or on prepared subgrades of the construction area either during or after construction. Undercut or excavated areas should be sloped toward one corner to facilitate removal of any collected rainwater, groundwater or surface runoff. Positive site surface drainage should be provided to reduce infiltration of surface water around the perimeter of the building and beneath the floor slab.

4.4 Shallow Foundation Recommendations

Provided the site preparation recommendations given in this report are followed, the planned structure may be supported on a relatively shallow foundation system bearing at a minimum depth of 2 feet below final grade. Foundation elements bearing on existing naturally occurring clay soils or within properly compacted structural fill at the recommended depth can be proportioned utilizing a maximum net allowable soil bearing pressure of 2,000 pounds per square foot for isolated spread footings and 1,600 pounds per square foot for continuous (wall) footings.

The recommended bearing pressures include a factor of safety of at least 3.0 against bearing capacity failure. However, minimum dimensions of 18 inches for continuous footings and 24 inches for spread footings should be used for design, even if the resulting bearing pressure is less than the allowable bearing pressure, to minimize the possibility of a local bearing capacity failure.

Consolidation of the soils resulting from the foundation loads will result in measurable but tolerable increments of soil settlements. Based on the results of field and laboratory tests, and assuming the foundation elements will be loaded to the maximum net allowable bearing capacity provided above, it is estimated that settlement of square footings up to 4½ feet by 4½ feet in plan dimension and continuous footings up to 3 feet in width will be less than one (1) inch. Differential settlement across the foundation should be less than ½-inch. The estimated settlements are based on a maximum of 2 feet of fill being placed above existing grade. If more fill is required to reach design elevation, settlement due to the weight of the fill may need to be considered as it may be excessive.

It should be noted, that the aforementioned bearing capacities are maximum allowable bearing capacities. For isolated spread footings, a lower bearing capacity can be utilized in conjunction with a larger footing size. As a result, a higher applied point load can be supported with equal or lower settlements. The following table provides settlement estimates for anticipated footing sizes and maximum applied pressures.

ESTIMATED SETTLEMENT FOR SQUARE SPREAD FOOTINGS (INCHES)									
Square Footing Size (ft)		**3**	**3½**	**4**	**4½**	**5**	**5½**	**6**	**6½**
Applied Pressure (psf)	**1,400**	0.60	0.67	0.73	0.78	0.83	0.88	0.93	0.97
	1,600	0.66	0.73	0.79	0.85	0.90	0.96	-	-
	1,800	0.71	0.78	0.85	0.92	0.98	-	-	-
	2,000	0.76	0.83	0.91	0.98	-	-	-	-

A graphical representation of the preceding table is provided in the appendix of this report. The values presented above are based on spread footings bearing at a depth of 2 feet below final grade. The above table should be utilized to govern footing design only if the aforementioned maximum net allowable bearing capacity and corresponding limiting footing size does not provide adequate support of the anticipated structural loads.

The settlements provided above are estimates. Values were derived from empirical equations using average soil characteristics from laboratory testing performed on samples of the subsurface soils of the borings performed at this site. Therefore, it is anticipated that settlements throughout the structure may vary. Once again, the estimated settlements are based on a maximum of 2 feet of fill being placed above existing grade. If more fill is required to reach design elevation, settlement due to the weight of the fill will need to be considered as it may be excessive.

It should be noted that total settlements on the order of one (1) inch and differential settlement of ½-inch or less are generally considered moderate but tolerable for structures of the type proposed. It is highly recommended that the design of masonry walls include provisions for liberally spaced, vertical control joints to minimize the effects of cosmetic “cracking”. Furthermore, it is recommended that good rigidity of the structure foundations be provided. This could consist of stiffening the slab with grade beams and tying the individual foundation elements together to form a “waffle” pattern or by the use of post-tensioned reinforcement.

The foundation excavations should be observed by a representative of SITE Engineering, Inc. prior to placement of reinforcing steel or concrete to assure that the foundation soils are consistent with the materials discussed in this report. Soft or loose soil zones encountered at the bottom of the footing excavations should be removed to the level of suitable bearing material and replaced with adequately compacted structural fill as directed by the Geotechnical Engineer.

After opening, the footing excavations should be observed and concrete placed as quickly as possible to avoid exposure of the footing bottoms to wetting and drying. Surface run-off water should be drained away from the excavations and not be allowed to pond. If it is required that footing excavations be left open for more than one day, they should be protected to reduce evaporation or entry of moisture.

4.5 Uplift Resistance of Shallow Foundation Elements

Uplift resistance of shallow footings will be limited to the weight of the foundation concrete and the soil above the footings. For design purposes, the ultimate uplift resistance should be based on unit weights of 145 pcf for the concrete in the footings and 115 pcf for the soil above the footing. A factor of safety of at least 1.1 should be applied to the calculated uplift resistance to account for potential variations in the concrete and soil unit weights. The size and depth of foundation should be checked by the structural engineer to assure that it is capable of supporting the uplift forces.

If adequate uplift resistance cannot be achieved, consideration should be given to supporting the proposed building on a deep foundation system. Capacities for various deep foundation options can be provided by our office at your request.

4.6 Other Foundation Types

It should be noted that foundation types other than those discussed in this report could be used for support of the structure at this site. These foundation systems include but are not limited to drilled cast-in-place concrete shafts, auger cast-in-place piles, driven piles of various materials, and screwed helical piles. Ground improvement techniques such as rigid inclusions or stone columns (aggregate piers) may also offer an increase in bearing capacity while minimizing settlements without the expense of a typical deep foundation system. Some of these foundation types and ground improvement systems are patented and should be designed by the manufacturer or distributor. SITE Engineering, Inc. can contact these manufacturers and provide design recommendations at your request.

4.7 Floor Slab Recommendations

A soil supported floor slab may be utilized for the proposed structure at this site provided the site preparation and fill material recommendations provided in this report are followed. Due to the presence of the moderately to highly plastic clay soils at this site, it is recommended that a minimum of 24 inches of compacted low plasticity soil be provided below the building floor slab to minimize the potential for future volume changes in the supporting soils.

As previously mentioned, after stripping and undercutting as required and prior to placement of structural fill the exposed subgrade should be proof-rolled to aid in identifying any soft or loose soil areas. Soft or unstable soils should be undercut to a level of firm soil and replaced with adequately compacted structural fill. Fill material should meet the material specifications and compaction requirements described in the “Site Preparation” section of this report.

Floor slab loads are commonly distributed to grade (either existing or finished soil grade) by slab-on-grade type construction. Otherwise, a structural floor is used to carry the floor loads independent of the grade. Common types of slabs-on-grade are reinforced slabs, which may or may not include interior ribs, and post-tensioned slabs. The ribbed slab and post-tensioned slab provide rigidity against differential movement and minimize slab cracking. Recommendations for a ribbed slab and post-tensioned slab are provided in the following paragraphs in the event they are preferred over a structural concrete slab.

Ribbed Floor Slab: The ribbed slab should be designed by a registered and qualified structural engineer. However, certain design criteria are suggested. Interior grade beams should be at least 18 inches deep from the top of the slab. The spacing of the ribs should be determined by the structural engineer based on the thickness of the slab but should in no case be greater than 15 feet. Where practical, these ribs should be arranged to coincide with non-load bearing interior walls. A minimum beam width of 12 inches is recommended to allow adequate bearing area. The floor slab and interior grade beams should be a monolithic unit with no joints. If concrete cannot be placed monolithically, it should be doweled to provide continuity and good rigidity.

Post-Tensioned Floor Slab: An alternative to a reinforced ribbed slab foundation is post-tensioned reinforcement. Post-tensioning involves providing tensile steel reinforcement in the slab system by stressing high strength steel tendons after the concrete has achieved sufficient strength. A post-tension ribbed slab is a specialized structural design and should be designed by a qualified structural engineer who is competent and familiar with this type of reinforcement. If post-tensioned reinforcement is chosen, the designer may require specific soil parameters. SITE Engineering should be contacted to provide additional information if requested by the post-tension engineer.

In either case, floor slabs constructed at-grade for this project can be designed utilizing a modulus of subgrade reaction (spring constant), k, of 75 pci for the required compacted structural fill. If a higher modulus of subgrade reaction is required, a k value of 110 pci can be obtained by provided a minimum of 4 inches of clean sand (less than 10 percent fines) directly beneath the floor slab. A k value of 145 pci may be achieved by the placement of 4 inches of crushed limestone, crushed concrete or washed gravel.

Furthermore, if moisture sensitive floor coverings are used on the interior slabs, consideration should be given to the use of barriers (either polyethylene or a thin sand, graded gravel, or limestone) to minimize potential vapor rise through the slabs. Other design and construction considerations, as outlined in the American Concrete Institute (ACI) Design manual (section 302.1R) are recommended. Positive separations and/or isolation joints should be provided between the grade slabs and all foundations and walls/columns to allow independent movement.

5.0 PAVEMENT RECOMMENDATIONS

We have evaluated both rigid (portland cement concrete) and flexible (asphaltic cement concrete) pavement systems for this project. Although specific traffic information was not provided to us, we have assumed that traffic conditions will primarily consist of passenger vehicles and buses with weekly passes of larger vehicles such as delivery trucks and garbage collections vehicles.

The grading information for the pavement areas is also unknown at this time. However, for purposes of this report, we have assumed that the pavement area will be constructed at or very near existing site grades and, therefore, should require less than about 18 inches of cut and/or fill to reach design elevation. We have further assumed that the site preparation criteria presented in this report will be followed and all remaining topsoil, organics, and any isolated soft or loose soil areas encountered during proofrolling of the subgrade will be removed and replaced with compacted structural fill as previously described. Therefore, it is estimated the subgrade soils will be prepared to achieve a minimum CBR of 3 or a modulus of subgrade reaction (k) of 75 pci.

The general pavement design information presented in this report is based on information published by AASHTO and the Portland Cement Association as well as past experience in this area. The published information was utilized in conjunction with the available field and laboratory test data to develop general pavement recommendations. Specific design parameters considered in the pavement analyses are as follows:

CBR	3.0
Modulus of Subgrade Reaction, k	75 pci
Reliability	85%
Modulus of Elasticity	3.4×10^6
Deviation	0.45 Asphalt, 0.35 Rigid
Initial Serviceability	4.2 Asphalt, 4.5 Rigid
Terminal Serviceability	2.5
Modulus of Rupture (concrete)	600 psi
Load Transfer	3.2 Dowels or Keys
Drainage Coefficient	1.0
Layer Coefficients	0.41 Asphalt 0.14 Base Course 0.06 Compacted Fill or Lime Treated Subgrade

The recommended minimum pavement sections for the passenger vehicle parking areas (light-duty) and heavy-duty drives are as follows:

RIGID PAVEMENT		
Pavement Materials	**Minimum Thickness (Inches)**	
	Parking Stalls	**Drives**
Portland Cement Concrete	5	6
Compacted Granular Fill (Clean Sand, Crushed Limestone or Crushed Portland Cement Concrete)	4	4
Compacted Structural Fill or Lime Treated Subgrade (8% by Volume)	12	12

FLEXIBLE PAVEMENT		
Pavement Materials	Minimum Thickness (Inches)	
	Parking Stalls	Drives
Asphaltic Concrete Wearing Course	2	3
Compacted Crushed Limestone or Crushed Portland Cement Concrete Base	8	10
Compacted Structural Fill or Lime Treated Subgrade (8% by Volume)	12	12

The compacted crushed limestone or crushed concrete base for flexible pavements may be replaced with a cement stabilized base course. The thickness of the soil-cement layer and percentage of cement will vary depending on grading plans and the type of material to be stabilized. However, it is estimated that a soil-cement layer approximately 12 inches in thickness stabilized with about 8 percent cement by volume should be sufficient. The actual amount of cement will be depend on the soil to be stabilized and should, therefore, be determined at the time of construction.

Soils to be cement treated should have a plasticity index (PI) of 15 or less. If the pavement base soils have a PI greater than 15, then lime treatment will be necessary to lower the plasticity index prior to cement stabilization. The thickness of lime treatment, if necessary, should be at least 12 inches. The amount of lime necessary to lower the PI of the fill soils will depend on the plasticity index of the soils to be treated and should be determined at the time of construction.

It should be noted that soil cement base has a tendency to shrink similar to concrete causing tension cracks that can reflect up through the asphalt surface course. The surface cracks will require additional maintenance and sealing to maintain the design life of the pavement. Percentages of cement greater than recommended above will further increase the frequency and severity of the hydration/shrinkage cracks.

Recent research involving a stone layer between the cement stabilized base and the asphalt surface course has provided better performance and longer life than only soil cement bases while resisting rutting and minimizing the occurrence of reflective cracking. Therefore, we recommend that consideration be given to providing a minimum 4-inch thick stone layer below the asphalt surface course if a soil cement base is used. If the 4-inch thick stone interlayer is used, the cement stabilized base section for flexible pavements may be reduced from 12 inches to 8 inches.
A heavy-duty pavement section consisting of at least 7 inches of adequately reinforced portland cement concrete on a minimum of 8 inches of compacted crushed limestone or crushed concrete base is recommended where trash dumpsters or semi-trailers are to be parked on the pavement or where the front tires of trash collection trucks will be positioned during lifting of the dumpster. This should provide better distribution of surface loads to the subgrade without causing deformation of the surface.

Pavements and fill materials should meet the requirements of the Louisiana Standard Specifications for Roads and Bridges (LSSRB). Structural fill utilized in the pavement areas should be compacted to 95 percent of the maximum dry density as determined by ASTM D698 (standard Proctor) at a moisture content within 2 percent of the optimum value.

Proper finishing of concrete pavement requires the use of appropriate construction joints to reduce the potential for cracking. Construction joints should be designed in accordance with current Portland Cement Association and the American Concrete Institute guidelines. Joints should be sealed to reduce the potential for water infiltration into pavement joints and subsequent infiltration into the supporting soils. Load transfer devices at the pavement joints should be designed in accordance with accepted codes. The concrete should have a minimum compressive strength of 3,500 psi at 28 days. The concrete should also be designed with 5±1 percent entrained air to improve workability and durability.

Asphaltic concrete pavement materials should meet the requirements of the LSSRB and should be compacted to a minimum of 95 percent of the density of the laboratory molded specimen. For flexible pavements, the compacted crushed limestone or crushed recycled Portland cement concrete base should conform to the LSSRB, Section 1003.03b or 1003.03c, respectively. The crushed base for flexible pavements should be also compacted to at least 98 percent of the maximum dry density as determined by ASTM D-698.

Prior to placement of a crushed limestone or crushed concrete base for either flexible or rigid pavements, a geotextile fabric separator should be placed on the compacted fill or proofrolled subgrade soils. The purpose of the separator is to limit migration of the crushed aggregate base into the fine grained soils below during periods of wet weather. If a sand base is utilized, the geotextile fabric may be omitted. However, placement of a strip of fabric separator approximately 18 to 24 inches in width under each pavement joint is recommended to minimize migration of the sand into the pavement joints.

The geotextile which is sold in rolls of various sizes, should be installed per the manufacturer's recommendations and be overlapped a minimum of 2 feet. If a cement stabilized base with a stone interlayer is utilized as described earlier in this section, the geotextile fabric separator may be omitted. The geotextile fabric separator should meet the requirements of LSSRB Table 1019.01 Class B.

A geogrid soil reinforcement product may be utilized to minimize undercutting or chemical stabilization of soft soils, if encountered during proofrolling, in the pavement areas. The type and usability of a geogrid will depend on the severity of the unstable soils. If desirable, SITE Engineering should be contacted to provide alternative pavement sections which include the placement of geogrid reinforcement.

In addition, water should not be allowed to pond behind curbs and saturate the pavement base. In down grade areas, granular base should extend through the slope to allow any water entering the base a path to exit. The subgrade or fill soils beneath the pavement base course should be sloped to facilitate drainage. Landscape areas placed adjacent to or within the pavement system should not be allowed to drain under the pavement system or into the pavement base. Weep holes should be constructed in all storm water drainage catch basins to allow water a path to exit the pavement base. The weep holes should include a filter fabric to prohibit fines from eroding and washing into the catch basins. Details related to weep hole construction can be provided at your request.

6.0 CONSTRUCTION CONSIDERATIONS

6.1 Utility Lines

It is recommended that all utility pipes be bedded in firmly placed and compacted bedding materials. The bedding should be at least 6 inches in thickness and should extend one-half of the pipe diameter beyond the edge of either side of the pipe or a minimum of 12 inches, whichever is greater. The pipe should be side bedded to the mid-height of the pipe or to the pipe spring line if arch pipe is used.

The bedding material should consist of well graded, free draining stone or a sand-gravel mixture consisting of approximately 35 percent clean sand with less than 5 percent fines and approximately 65 percent pea gravel with a maximum aggregate size of ½ inch, compacted to at least 70 percent relative density as determined by ASTM D4253 and ASTM D4254 or to at least 90 percent of the maximum density as determined by ASTM D698 (standard Proctor). If utility piping that does not include water-tight joints is used, a geotextile fabric should be placed around the pipe at each joint to reduce potential migration of the fines in the fill or base into the joints of the pipe.

The trench excavations should be backfilled to the surface with granular fill. Low strength flowable fill may also be used to backfill the utility excavations. The granular backfill should consist of sand with less than 15 percent fines or crushed limestone and should be placed in lifts not exceeding 8 inches in thickness. The backfill should also be compacted to a minimum of 95 percent of the maximum dry density as determined by ASTM D698. Flowable fill should meet the requirements of LSSRB Section 710. Where utility excavations traverse the pavement system, the upper 12 inches of utility trench backfill should consist of fill soils meeting the material specifications in this report or suitable for cement stabilization where utilized.

For utility lines that do not traverse the pavement and are not installed within three (3) feet of the edge of the pavement system, backfill of the utility trenches may consist of previously excavated soils placed in lifts not exceeding 12 inches in thickness and compacted to at least 90 percent of the standard Proctor maximum dry density.

6.2 Construction Testing and Inspection

Many problems can be avoided or solved in the field if proper inspection and testing services are provided. It is recommended that the site preparation, foundation and floor slab construction, and pavement area construction be monitored by the geotechnical engineer or his representative.

Density tests should be performed to verify compaction and moisture content in the fill, and base material. Each lift of fill or base material should be tested and approved by the soils engineer prior to placement of subsequent lifts. As a guideline, it is recommended that field density tests be performed at a frequency of not less than 1 test per 2,500 and 5,000 square feet of surface area per lift in the building and pavement areas, respectively, with a minimum of three tests per lift.
Inspection should be performed prior to and during concrete placement. Foundation excavations should be observed by the soils engineer or his representative to verify that the exposed materials are suitable for support of the foundations. It is recommended that SITE Engineering, Inc. be retained to provide observation and testing of construction activities involved in the foundations, earthwork, and related activities of this project. SITE Engineering, Inc. cannot accept any responsibility for any conditions which deviated from those described in this report, nor for the performance of the foundations if not engaged to also provide construction observation and testing for this project.

6.3 Moisture Sensitive Soils/Weather Related Concerns

The near surface soils encountered in the borings performed at this site are considered sensitive to changes in moisture content and will lose strength and stability if allowed to become wet. During wet weather periods, increases in the moisture content of the soil may cause significant reduction in the soil strength and support capabilities. In addition, soils that become wet may be slow to dry and thus significantly retard the progress of grading and compaction activities. It will, therefore, be advantageous to perform earthwork and foundation construction activities during dry weather. If the upper soils are allowed to become saturated and the construction schedule does not allow for drying of the soils naturally, removal and replacement or chemical stabilization with lime will likely be required.

6.4 Drainage and Groundwater Concerns

Water should not be allowed to collect in the foundation excavations or floor slab areas, or on prepared subgrades of the construction area either during or after construction. Undercut or excavated areas should be sloped toward one corner to facilitate removal of any collected rainwater, groundwater, or surface runoff. Positive site surface drainage should be provided to reduce infiltration of surface water around the perimeter of the building and beneath the floor slab.

Groundwater was not encountered during the drilling operations within the depths explored by the borings performed at this site. Immediately after completion of the drilling and prior to demobilization of our drilling equipment, the boreholes were grouted with a cement-bentonite mixture as required by state regulations. Therefore, delayed groundwater measurements were not possible. It should be noted, that it is possible for a groundwater table to be present at a later time depending upon climatic and rainfall conditions. Therefore, we recommend that the Contractor determine the actual groundwater levels at the site at the time of the construction activities.

It is recommended that the site be graded in anticipation of wet weather periods to help prevent water from “ponding” within the construction areas and/or flowing into excavations. Filtered sump pumps placed in the bottoms of excavations, or other conventional dewatering techniques, such as drainage swales or other methods approved by the geotechnical engineer, are expected to be suitable for control of surface or runoff water. However, if uncontrollable groundwater infiltration into the excavations is experienced during construction, SITE Engineering should be contacted.

6.5 Excavations

In Federal Register, Volume 54, No. 209 (October 1989), the United States Department of Labor, Occupational Safety and Health Administration (OSHA) amended its "Construction Standards for Excavations, 29 CFR, part 1926, Subpart P". This document was issued to better insure the safety of workmen entering trenches or excavations. It is mandated by this federal regulation that excavations, whether they be utility trenches, basement excavation or footing excavations, be constructed in accordance with the new OSHA guidelines. It is our understanding that these regulations are being strictly enforced and if they are not closely followed, the owner and the contractor could be liable for substantial penalties.

The contractor is solely responsible for designing and constructing stable, temporary excavations and should shore, slope, or bench the sides of the excavations as required to maintain stability of both the excavation sides and bottom. The contractor's "responsible person", as defined in 29 CFR Part 1926, should evaluate the soil exposed in the excavations as part of the contractor's safety procedures. In no case should slope height, slope inclination, or excavation depth, including utility trench excavation depth, exceed those specified in local, state, and federal safety regulations.

We are providing this information solely as a service to our client. SITE Engineering, Inc. does not assume responsibility for construction site safety or the contractor's or other parties' compliance with local, state, and federal safety or other regulations.

7.0 REPORT LIMITATIONS

The recommendations submitted in this report are based on the available subsurface information obtained by SITE Engineering for the proposed project. If there are any revisions to the plans for this project, or if deviations from the subsurface conditions noted in this report are encountered during construction, SITE Engineering should be notified immediately to determine if changes in the foundation recommendations are required. If we are not notified of such changes, SITE Engineering will not be responsible for the impact of those changes on the project.

The geotechnical engineer warrants that the findings, recommendations, specifications, or professional advice contained herein have been made in accordance with generally accepted professional geotechnical engineering practices in the local area. No other warranties are implied or expressed.

After the plans and specifications are more complete, the geotechnical engineer should be retained and provided the opportunity to review the final design plans and specifications to check that our engineering recommendations have been properly incorporated into the design documents. At that time, it may be necessary to submit supplemental recommendations. This report has been prepared for the exclusive use of the University of Louisiana at Lafayette or their assigns for the specific application to the proposed intramural sports facility to be constructed at the referenced location in Lafayette, Louisiana.

APPENDIX

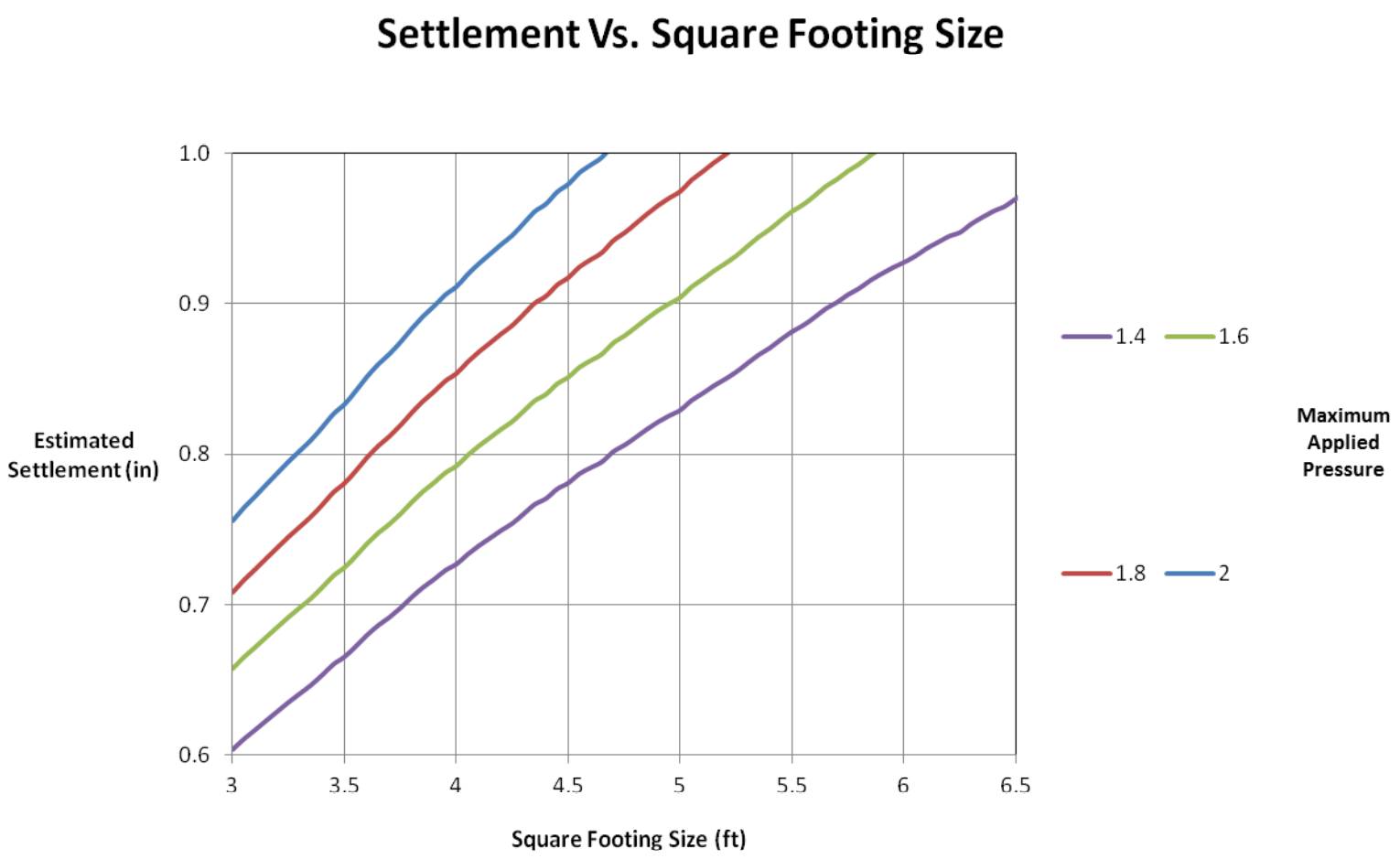
Settlement Vs. Square Footing Size
Estimated Settlement (in)
1.0
0.9
0.8
0.7
0.6
3
3.5
4
4.5
5
5.5
6
6.5
Square Footing Size (ft)
1.4
1.6
1.8
2
Maximum Applied Pressure

Boring Location Diagram

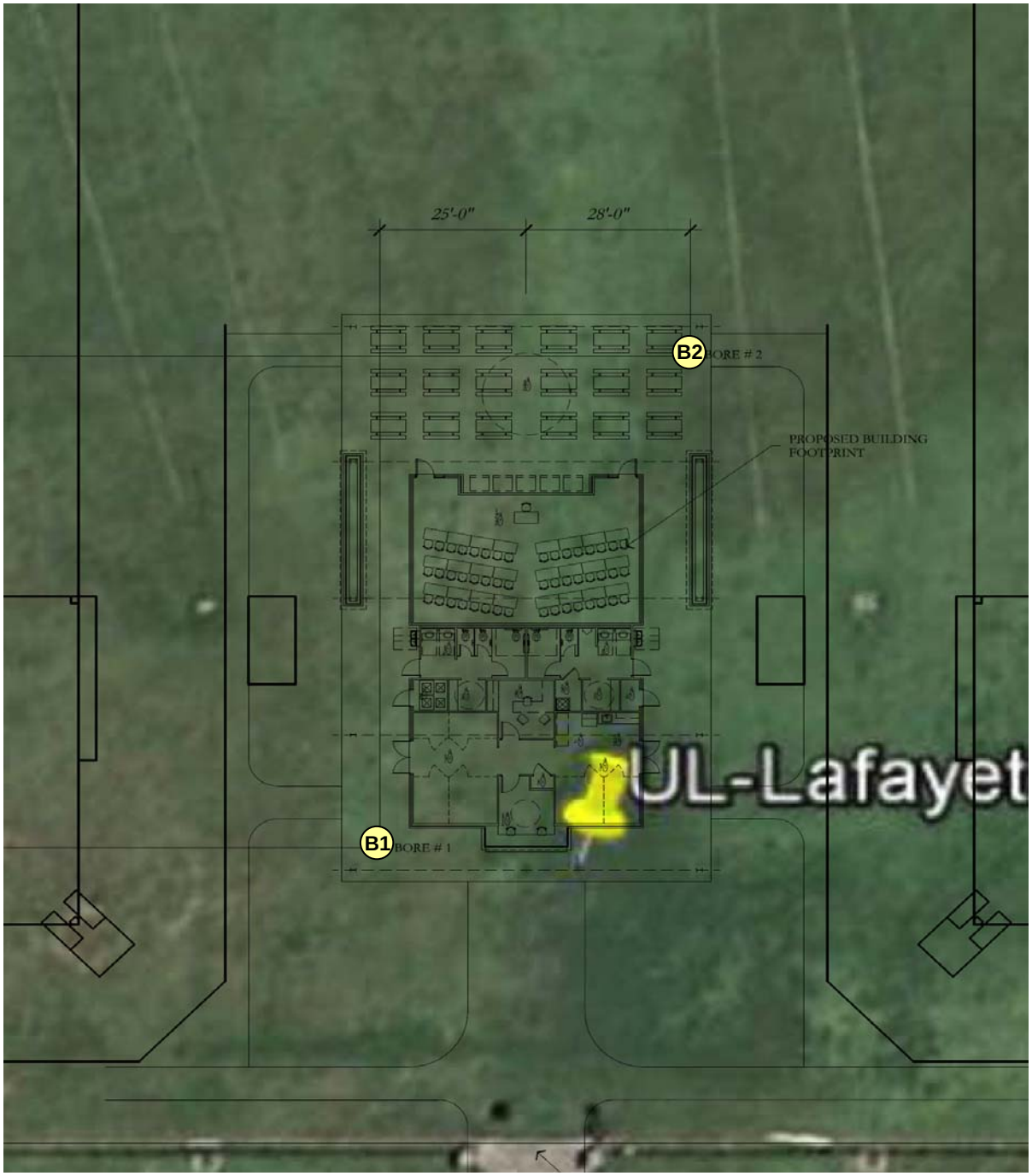

SITE ENGINEERING, INC.

Proposed UL Lafayette Intramural Sports Facility
Coliseum Road
Lafayette, Louisiana

Project #14-G119-01
Date: December 3, 2014

(#) = Approximate Boring Location

KEY TO TERMS AND SYMBOLS USED ON LOGS

SOIL TYPE

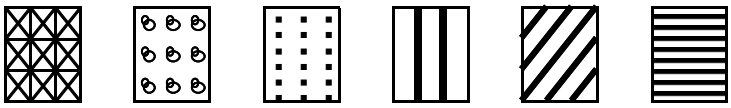

ROCK GRAVEL SAND SILT CLAY PEAT

SAMPLE TYPE

NO SAMPLE | AUGER SAMPLE | SHELBY TUBE | SPLIT SPOON

MODIFIERS

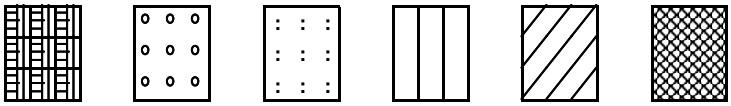

STONE or CONCRETE | GRAVELY | SANDY | SILTY | CLAYEY | FILL or TOPSOIL

NO RECOVERY | ROCK CORE | 2" SHELBY TUBE | TXDOT CONE

UNIFIED SOIL CLASSIFICATION SYSTEM - ASTM D 2487-98

MAJOR DIVISIONS			LETTER SYMBOL	TYPICAL DESCRIPTIONS
COARSE GRAINED SOILS (LESS THAN 50% PASSING NO. 200 SIEVE)	GRAVEL & GRAVELY SOILS LESS THAN 50% PASSING NO. 4 SIEVE	CLEAN GRAVEL (LITTLE OR NO FINES	GW	WELL GRADED GRAVEL, GRAVEL-SAND MIXTURES WITH LITTLE OR NO FINES
			GP	POORLY GRADED GRAVEL, GRAVEL-SAND MIXTURES WITH LITTLE OR NO FINES
		W/ APPRECIA BLE FINES	GM	SILTY GRAVEL, GRAVEL-SAND-SILT MIXTURES
			GC	CLAYEY GRAVELS, GRAVEL-SAND-CLAY MIXTURES
	SANDS MORE THAN 50% PASSING NO. 4 SIEVE	CLEAN SANDS LITTLE FINES	SW	WELL GRADED SAND, GRAVELY SAND (LITTLE FINES)
			SP	POORLY GRADED SANDS, GRAVELY SAND (L.FINES)
		SANDS WITH APPREA. FINES	SM	SILTY SANDS, SAND-SILT MIXTURES
			SC	CLAYEY SANDS,SAND-CLAY MIXTURES
FINE GRAINED SOILS (MORE THAN 50% PASSING NO. 200 SIEVE)	SILTS AND CLAYS LIQUID LIMIT LESS THAN 50		ML	INORGANIC SILTS & VERY FINE SANDS,ROCK FLOUR SILTY OR CLAYEY FINE SANDS OR CLAYEY SILT W/ LOW PI
			CL	INORGANIC CLAY OF LOW TO MEDIUM PI LEAN CLAY GRAVELY CLAYS, SANDY CLAYS, SILTY CLAYS
			OL	ORGANIC SILTS & ORGANIC SILTY CLAYS OF LOW PI
	SILTS AND CLAYS LIQUID LIMIT GREATER THAN 50		MH	INORGANIC SILTS, MICACEOUS OR DIATOMACEOUS FINE SANDY OR SILTY SOILS, ELASTIC SILTS
			CH	INORGANIC CLAYS OF HIGH PLASTICITY FAT CLAYS
			OH	ORGANIC CLAYS OF MED TO HIGH PI, ORGANIC SILT
HIGHLY ORGANIC SOIL			PT	PEAT AND OTHER HIGHLY ORGANIC SOILS
UNCLASSIFIED FILL MATERIALS			ARTIFICIALLY DEPOSITED AND OTHER UNCLASSIFIED SOILS AND MAN-MADE SOIL MIXTURES	

CONSISTENCY OF COHESIVE SOILS

CONSISTENCY	UNCONFINED COMPRESSIVE STRENGTH IN TONS/FT^2
VERY SOFT	0.0 TO 0.25
SOFT	0.25 TO 0.50
FIRM	0.50 TO 1.0
STIFF	1.0 TO 2.0
VERY STIFF	2.0 TO 4.0
HARD	> 4.0 OR 4.0+

RELATIVE DENSITY - GRANULAR SOILS

CONSISTENCY	N-VALUE (BLOWS/FOOT)
VERY LOOSE	0-4
LOOSE	4-9
MEDIUM DENSE	10-29
DENSE	30-49
VERY DENSE	> 50 OR 50+

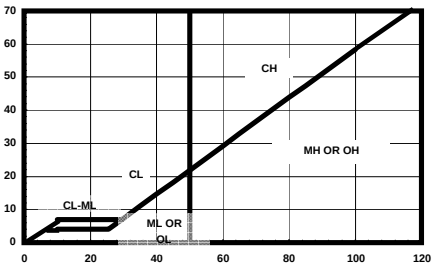

ABBREVIATIONS

Qp - HAND PENETROMETER
Qt - TORVANE
MV - MINIATURE VANE
Qu - UNCONFINED COMPRESSION TEST
UU - UNCONSOLIDATED UNDRAINED TRAIXIAL
CU - CONSOLIDATED UNDRAINED

▼ GROUNDWATER FIRST ENCOUNTERED

∇ (? HRS) DELAYED GROUNDWATER READING W/ ELAPSED TIME

CLASSIFICATION OF GRANULAR SOILS

U.S. STANDARD SIEVE SIZE(S)

6" 3" 3/4" 4 10 40 200

BOUL--DERS	COBBLES	GRAVEL		SAND			SILT OR CLAY	CLAY
		COARSE	FINE	COARSE	MEDIUM	FINE		

152 76.2 19.1 4.76 2.0 0.42 0.074 0.002

GRAIN SIZE IN MM

SITE Engineering, Inc.

LOG OF BORING B-1

Proposed UL Lafayette Intramural Sports Facility

Coliseum Road

Lafayette, Louisiana

TYPE OF BORING: Solid Flight Auger

SITE Project #: 14-G119

DEPTH, FT.	SOIL TYPE	SAMPLE TYPE	SOIL DESCRIPTION **SURFACE ELEVATION:** Existing Grade	N-VALUE, blows per foot	UNCONFINED COMPRESSIVE STRENGTH (Qu), tsf	HAND PENETROMETER (Qp), tsf	TORVANE (Qt), tsf	UNIT DRY WEIGHT pcf	MOISTURE CONTENT, %	LIQUID LIMIT	PLASTICITY INDEX	% PASSING #200 SIEVE
			8" Lean Clay topsoil / Very stiff dark brown and brown			4.5+			15			
			fat CLAY (CH) with ferrous nodules		3.05	4.0		102	19	57	32	
			- desiccated upper 2 feet									
					2.63	3.5		95	26			
5			Stiff to firm brown lean CLAY (CL) with silt and ferrous									
			nodules		1.28	2.0		93	26	48	24	
						2.0			26			
			- becoming firm at 8 feet									
10					0.76		0.40	92	27			
15					0.64		0.35	90	27			
20					0.72		0.40	94	26			
			Very stiff to stiff light brown and gray fat CLAY (CH) with									
			ferrous nodules									
25					2.19	3.0		95	26			
			- becoming stiff at 27 feet									
30					1.65	2.5		98	25			
			Boring terminated at 30 feet below grade									
35												
40												
45												
50												

DEPTH OF BORING: 30 Feet Below Existing Grade

DEPTH TO GROUNDWATER: Not Encountered During Drilling

DATE OF BORING: November 12, 2014

SITE Engineering, Inc.

LOG OF BORING B-2

Proposed UL Lafayette Intramural Sports Facility

Coliseum Road

Lafayette, Louisiana

TYPE OF BORING: Solid Flight Auger

SITE Project #: 14-G119

DEPTH, FT.	SOIL TYPE	SAMPLE TYPE	SOIL DESCRIPTION **SURFACE ELEVATION:** Existing Grade	N-VALUE, blows per foot	UNCONFINED COMPRESSIVE STRENGTH (Qu), tsf	HAND PENETROMETER (Qp), tsf	TORVANE (Qt), tsf	UNIT DRY WEIGHT pcf	MOISTURE CONTENT, %	LIQUID LIMIT	PLASTICITY INDEX	% PASSING #200 SIEVE
			7" Lean Clay topsoil / Very stiff dark brown and brown fat CLAY (CH) with ferrous nodules		2.62	3.5		92	21			
					2.24	3.5		96	25			
					2.95	4.0		92	28	64	40	
5			Stiff to firm brown lean CLAY (CL) with silt and ferrous nodules		1.61	2.5		96	26			
			- becoming firm at 8 feet			2.5			27	47	24	
10					0.51		0.25	90	28			
			Stiff light brown and gray fat CLAY (CH) with ferrous nodules									
15					1.00	1.5		91	29			
20					1.82	2.5		89	31			
			- very stiff from 22 to 27 feet									
25					2.46	3.5		96	27			
			- with pockets of silt/silty clay from 27 to 30 feet									
30					1.20	2.0		95	26			
			Boring terminated at 30 feet below grade									
35												
40												
45												
50												

DEPTH OF BORING: 30 Feet Below Existing Grade

DEPTH TO GROUNDWATER: Not Encountered During Drilling

DATE OF BORING: November 12, 2014

SITE Engineering, Inc.

GENERAL ELECTRICAL NOTES:

1. CONTRACTOR IS RESPONSIBLE FOR SURVEYING REQUIRED TO LAY OUT ALL ELECTRICAL WORK. CONTRACTOR IS RESPONSIBLE FOR DETERMINING FINAL ELEVATIONS.
2. LIGHTING CONDUITS SHALL BE INSTALLED A MINIMUM OF 5'-0" AWAY FROM THE OUTSIDE OF THE FIELDS. NO TRENCHING SHALL BE DONE ON THE INSIDE OF THE AREA OF FIELD.
3. MINIMUM DEPTH ON ALL CONDUIT IS 36" FROM FINAL GRADE. COORDINATE WITH EXISTING UTILITIES.
4. FINAL LABELING OF ALL LIGHT POLES, PANELS, FIELD DESCRIPTIONS TO BE DETERMINED PRIOR TO FABRICATION OF LABELS. FIELD NAMES AND NUMBERS WILL CHANGE.
5. REFER TO SCHEDULES FOR CIRCUIT INFORMATION.
6. CONTACT LOUISIANA ONE CALL PRIOR TO ANY DIGGING.
7. CONTRACTOR SHALL COORDINATE FINAL LOCATIONS OF LIGHT POLES WITH PARK STRUCTURES, PAVING, FENCING, SITE UTILITIES, ETC.
8. CONTRACTOR SHALL BACK FILL AND TAMP ALL TRENCHES AND OPENINGS REGARDLESS OF SIZE PER DETAIL.

ELECTRICAL NOTES:

1. COORDINATE WITH DEPTH OF DRAINAGE, GAS, SEWER, AND WATER LINES IN THIS AREA.
2. MOUNT TO LIGHT POLE IN THIS AREA. CONCEAL FEEDER CONDUIT. (ROUTE THROUGH LIGHT POLE)
3. STUB OUT 3-3/4" CONDUITS FROM PANEL. CONCEAL (ROUTE THROUGH LIGHT POLE)
4. INTERCEPT EXISTING CONDUIT STUB OUT FROM INTRAMURAL BUILDING. ROUTE TO CPR CONTROL CABINET WITH PULLSTRING FOR FUTURE. ASSUME 2" CONDUIT. VERIFY EXISTING CONDITIONS.

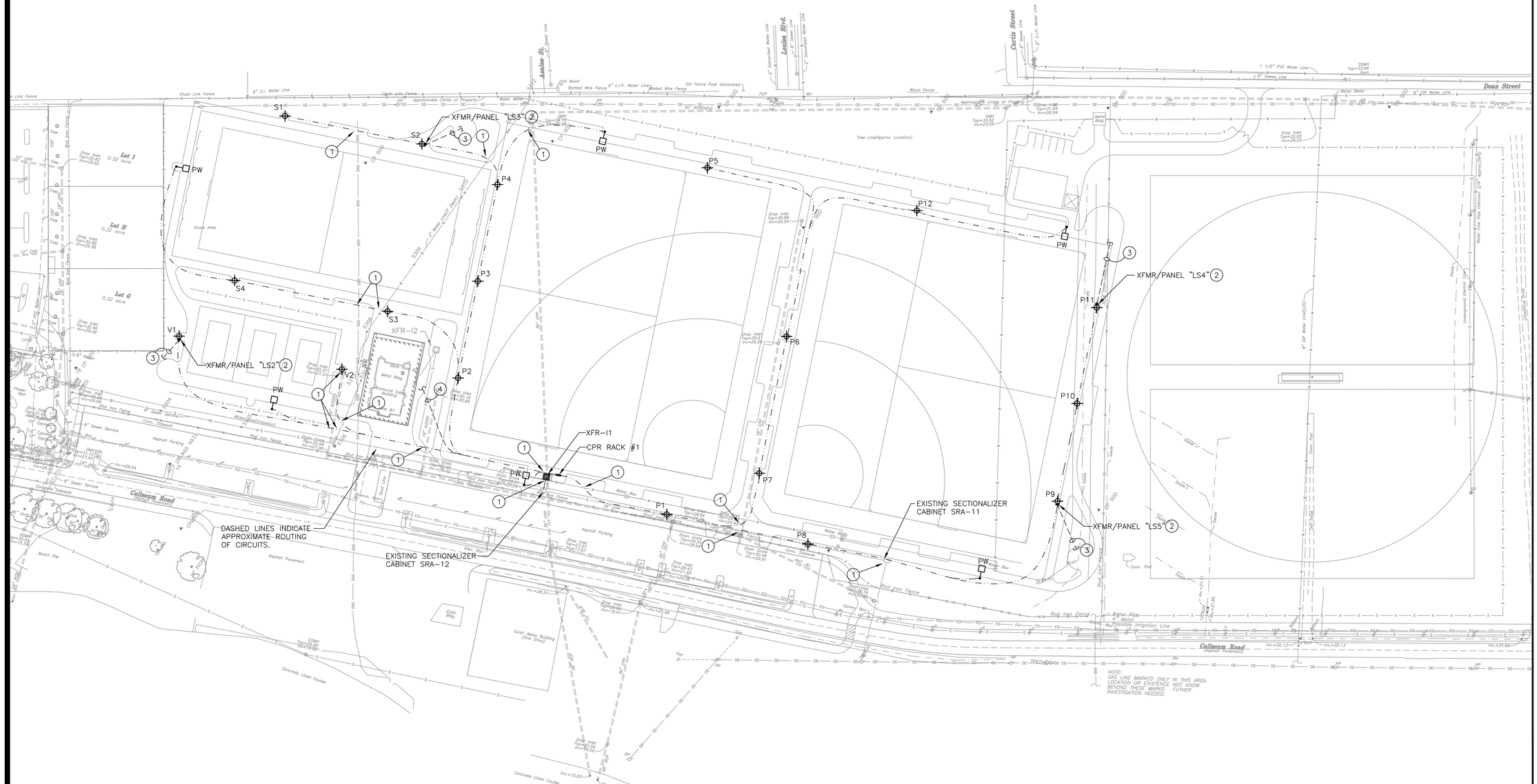

ELECTRICAL SITE PLAN

0 60'

SCALE: 1" = 60'-0"

M&E CONSULTING
1304 BERTRAND DRIVE SUITE A6
LAFAYETTE, LOUISIANA 70506
(337) 234-7474 * FAX (337) 234-7774
Electrical Contact: DAVID CARROLL
david@meconsulting.com
PROJECT No.: 15064.00

GENERAL NOTES		
NO:	REVISIONS:	DATE:

University of Louisiana at Lafayette Intramural Complex Sports Lighting

UL PHYSICAL PLANT
THE UNIVERSITY OF LOUISIANA AT LAFAYETTE
P.O. BOX 43210
LAFAYETTE, LOUISIANA 70504

UL LAFAYETTE
UNIVERSITY OF LOUISIANA
PHYSICAL PLANT

STATE OF LOUISIANA
SCOTTY J. BAUDIN
REGISTERED PROFESSIONAL ENGINEER
ELECTRICAL ENGINEERING
6/23/16

PROJECT NO: 15064.00	SHEET:
DATE: JUNE 2016	E1.1
SCALE: AS SHOWN	

SWITCHING SCHEDULE

Field/Zone Description	Zones
Soccer-1	1
Volleyball	2
Area 1	3
Area 2	4
Walkw ay	5

CONTROL POWER CONSUMPTION	
120V Single Phase	
VA loading of Musco Supplied Equipment	INRUSH: 9943.0
	SEALED: 1123.8

CIRCUIT SUMMARY BY ZONE

POLE	CIRCUIT DESCRIPTION	# OF FIXTURES	# OF DRIVERS	*FULL LOAD AMPS	CONTACTOR SIZE (A MPS)	CONTACTOR ID	ZONE
S1	Soccer-1	4	2	5.7	30	C1	1
S2	Soccer-1	4	2	5.7	30	C2	1
S3	Soccer-1	4	2	5.7	30	C3	1
S4	Soccer-1	4	2	5.7	30	C4	1
V1	Volleyball	4	2	5.9	30	C5	2
V2	Volleyball	4	2	5.9	30	C6	2
P1	Area 1	10	5	10.4	30	C7	3
P2	Area 1	10	5	10.5	30	C8	3
P3	Area 1	12	6	11.6	30	C9	3
P4	Area 1	8	4	8.6	30	C10	3
P5	Area 1	12	6	11.5	30	C11	3
P6	Area 1	12	6	11.7	30	C12	3
P7	Area 1	10	5	10.4	30	C13	3
P6	Area 2	12	6	11.7	30	C14	4
P7	Area 2	10	5	10.4	30	C15	4
P8	Area 2	10	5	10.4	30	C16	4
P9	Area 2	10	5	10.4	30	C17	4
P10	Area 2	12	6	11.4	30	C18	4
P11	Area 2	8	4	8.6	30	C19	4
P12	Area 2	12	6	11.4	30	C20	4
P1	Walkway	2	2	0.8	30	C22	5
P2	Walkway	2	2	0.8	30	C21	5
P3	Walkway	1	1	0.4	30	C21	5
P4	Walkway	2	2	0.8	30	C21	5
P5	Walkway	2	2	0.8	30	C22	5
P6	Walkway	2	2	0.8	30	C22	5
P7	Walkway	2	2	0.8	30	C22	5
P8	Walkway	2	2	0.8	30	C23	5
P9	Walkway	2	2	0.8	30	C23	5
P10	Walkway	1	1	0.4	30	C23	5
P11	Walkway	2	2	0.8	30	C23	5
P12	Walkway	2	2	0.8	30	C22	5
S1	Walkway	2	2	0.8	30	C21	5
S2	Walkway	2	2	0.8	30	C21	5
S3	Walkway	2	2	0.8	30	C21	5
S4	Walkway	2	2	0.8	30	C21	5
V1	Walkway	1	1	0.4	30	C21	5
V2	Walkway	1	1	0.4	30	C21	5

PANEL SUMMARY

CABINET #	CONTROL MODULE LOCATION	CONTACTOR ID	CIRCUIT DESCRIPTION	FULL LOAD AMPS	DISTRIBUTION PANEL ID (BY OTHERS)	CIRCUIT BREAKER POSITION (BY OTHERS)
1	1	C1	Pole S1	5.69		
1	1	C2	Pole S2	5.69		
1	1	C3	Pole S3	5.69		
1	1	C4	Pole S4	5.69		
1	1	C5	Pole V1	5.89		
1	1	C6	Pole V2	5.89		
1	1	C7	Pole P1	10.39		
1	1	C8	Pole P2	10.49		
1	1	C9	Pole P3	11.58		
1	1	C10	Pole P4	8.58		
2	1	C11	Pole P5	11.47		
2	1	C12	Pole P6	11.73		
2	1	C13	Pole P7	10.39		
2	1	C14	Pole P6	11.73		
2	1	C15	Pole P7	10.39		
2	1	C16	Pole P8	10.39		
2	1	C17	Pole P9	10.39		
2	1	C18	Pole P10	11.37		
2	1	C19	Pole P11	8.58		
2	1	C20	Pole P12	11.42		
2	1	C22	Pole P1	0.80		
3	1	C21	Pole P2	0.80		
3	1	C21	Pole P3	0.40		
3	1	C21	Pole P4	0.80		
3	1	C22	Pole P5	0.80		
3	1	C22	Pole P6	0.80		
3	1	C22	Pole P7	0.80		
3	1	C23	Pole P8	0.80		
3	1	C23	Pole P9	0.80		
3	1	C23	Pole P10	0.40		
3	1	C23	Pole P11	0.80		
3	1	C22	Pole P12	0.80		
3	1	C21	Pole S1	0.80		
3	1	C21	Pole S2	0.80		
3	1	C21	Pole S3	0.80		
3	1	C21	Pole S4	0.80		
3	1	C21	Pole V1	0.40		
3	1	C21	Pole V2	0.40		

ZONE SCHEDULE

ZONE	SELECTOR SWITCH	ZONE DESCRIPTION	CIRCUIT DESCRIPTION: POLE ID	CIRCUIT DESCRIPTION: CONTACTOR ID
Zone 1	1	Soccer-1	S1	C1
			S2	C2
			S3	C3
			S4	C4
Zone 2	2	Volleyball	V1	C5
			V2	C6
Zone 3	3	Area 1	P1	C7
			P2	C8
			P3	C9
			P4	C10
			P5	C11
			P6	C12
			P7	C13
Zone 4	4	Area 2	P6	C14
			P7	C15
			P8	C16
			P9	C17
			P10	C18
			P11	C19
			P12	C20
Zone 5	5	Walkway	P1	C22
			P2	C21
			P3	C21
			P4	C21
			P5	C22
			P6	C22
			P7	C22
			P8	C23
			P9	C23
			P10	C23
			P11	C23
			P12	C22
			S1	C21
			S2	C21
			S3	C21
			S4	C21
			V1	C21
			V2	C21

ELECTRICAL SCHEDULES

NO SCALE

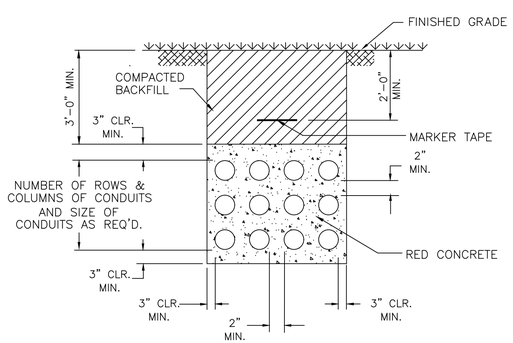

SEC. B-B
TYPICAL DUCT BANK SECTION

NTS

1 PRIMARY DUCT BANK DETAILS NO SCALE

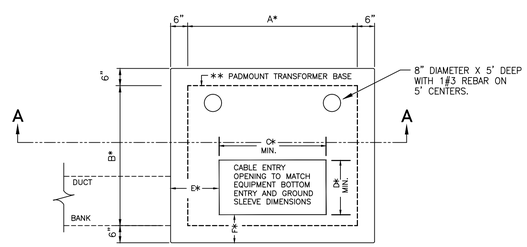

PLAN VIEW

NTS

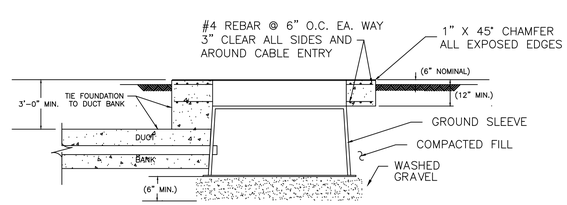

NOTES:

* DIMENSIONS A–F ACCORDING TO EQUIPMENT MANUFACTURER.

** COOLING FINS MAY EXTEND BEYOND PAD.

SEC. A-A

NTS

2 PADMOUNT TRANSFORMER PAD DETAILS NO SCALE

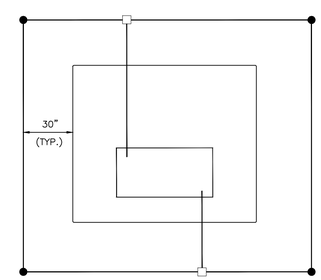

PADMOUNT TRANSFORMER PAD GROUNDING

NTS

LEGEND:

- 3/4" X 10'-0" GROUND ROD WITH EXOTHERMIC WELD
- EXOTHERMIC WELD CROSS (4-WAY) CONNECTION
- EXOTHERMIC WELD TEE CONNECTION
- 4/0 BARE COPPER WIRE

3 GROUNDING DETAILS NO SCALE

ELECTRICAL DETAILS

NO SCALE

M&E CONSULTING
1304 BERTRAND DRIVE SUITE A6
LAFAYETTE, LOUISIANA 70506
(337) 234-7474 * FAX (337) 234-7774
Electrical Contact: DAVID CARROLL
david@meconsulting.com
PROJECT No.: 15064.00

GENERAL NOTES

NO:	REVISIONS:	DATE:

University of Louisiana at Lafayette Intramural Complex Sports Lighting

THE UNIVERSITY OF LOUISIANA AT LAFAYETTE
UL PHYSICAL PLANT
P.O. BOX 43210
LAFAYETTE, LOUISIANA 70504

UL LAFAYETTE
UNIVERSITY OF LOUISIANA
PHYSICAL PLANT

STATE OF LOUISIANA
SCOTT J. BOURQUE
LICENSED PROFESSIONAL ENGINEER
ELECTRICAL ENGINEERING
6/23/16

PROJECT NO: 15064.00	SHEET:
DATE: JUNE 2016	E2.1
SCALE: AS SHOWN	

ELECTRICAL LEGEND

SYMBOL	ELECTRICAL DESCRIPTION
XX	POLE WITH SPORTS LIGHTING AND/OR SECURITY LIGHTING – REFER TO SCHEDULES FOR FIXTURES, CONTROL, LUMINAIRES, ETC.
XX/Y ZZF	FUSED DISCONNECT SWITCH – FUSE AT MANUFACTURE RECOMMENDED RATING UNLESS NOTED OTHERWISE. XX DENOTES DISCONNECT SIZE, Y DENOTES PHASE, ZZF ZZ DENOTES FUSE SIZE.
SB	SCOREBOARD DISCONNECT SWITCH WITH SURGE PROTECTOR.
	ELECTRICAL PANEL SURFACE MOUNTED
	ELECTRICAL PANEL FLUSH MOUNTED
	CONDUIT RUN CONCEALED IN WALL OR ABOVE CEILING
	CONDUIT RUN CONCEALED UNDER FLOOR OR BELOW GRADE
	HOMERUN TO ELECTRIC PANEL BOARD (INDICATED NUMBER OF CIRCUIT BY NUMBER OF ARROWS)
	APPROXIMATE ROUTING OF LIGHTING CIRCUITS.
	THREE (3) CONDUCTORS RUN IN CONDUIT
	FOUR (4) CONDUCTORS RUN IN CONDUIT
	FIVE (5) CONDUCTORS RUN IN CONDUIT
	FOUR (4) CONDUCTORS RUN IN CONDUIT, ONE CONDUCTOR DESIGNATED FOR ISOLATED GROUND
G	DENOTES GROUND FAULT INTERRUPTER PROTECTED
WP	DENOTES WEATHERPROOF

* ITEMS ON THIS SCHEDULE ARE NOT NECESSARILY SHOWN ON PLANS

LIGHTING FIXTURE SCHEDULE

MARK	DESCRIPTION	LAMPS No.	LAMPS TYPE	VOLTS	MANUFACTURER & CATALOG NUMBER	REMARKS
PW	LED POLE LIGHT (WALK PATH)	–	LED	277	LITHONIA: DSXO-LED-40C-530-50K-T2M-MVOLT-SPA-FINISH/ 15' SSS POLE	

NOTES:

1. RACK DIMENSIONS TO BE ADJUSTED FOR DOUBLE SECTION PANELS AND MULTIPLE LIGHTING CONTROL PANELS.
2. CONTRACTOR TO SUBMIT A SHOP DRAWING INDICATING RACK DIMENSIONS AND PLACEMENT OF ALL PIECES OF EQUIPMENT.
3. FINAL LOCATION OF ALL RACKS AND PAD LOCATED BY ENGINEER.
4. COORDINATE WITH FENCE INSTALLATION (BY OTHERS.)
5. FINAL ELEVATION OF CONCRETE PAD SHALL MATCH EXISTING TRANSFORMER FOUNDATION PADS.

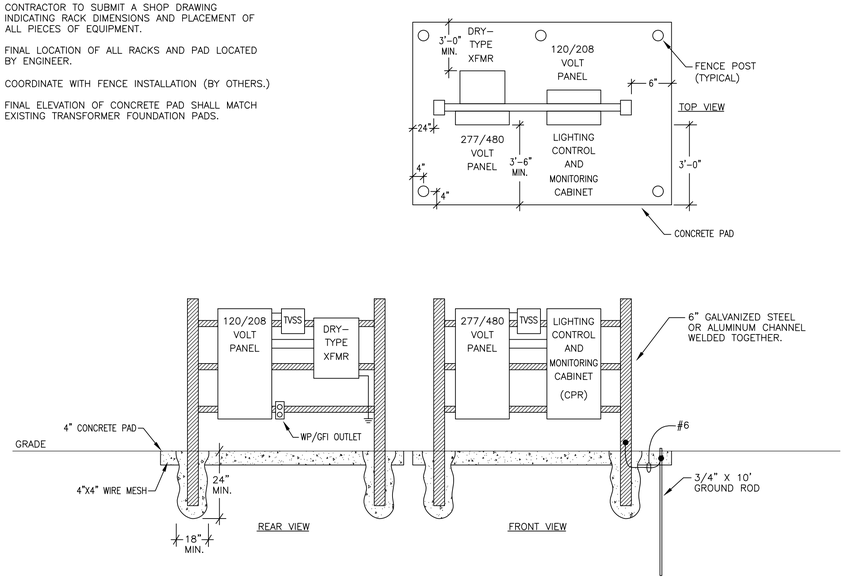

1 PANEL AND CONTROL PANEL RACK "CPR" DETAIL

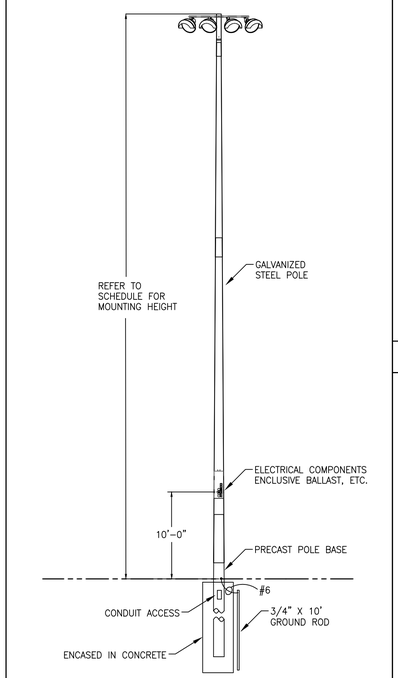

2 SPORTS LIGHT POLE DETAIL

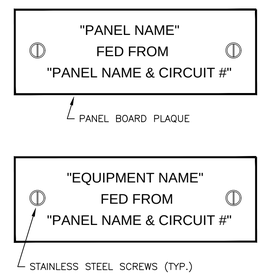

3 EQUIPMENT SIGNAGE DETAIL NO SCALE

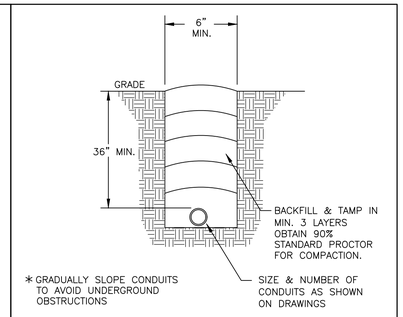

4 TRENCH DETAIL NO SCALE

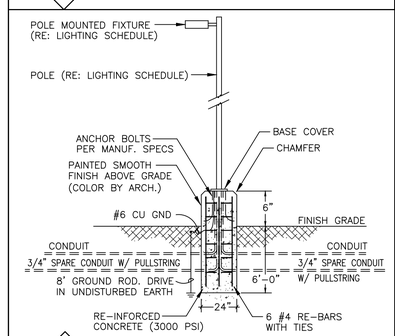

5 POLE FOUNDATION (TYPE "PW") DETAIL NO SCALE

GENERAL NOTES

NO:	REVISIONS:	DATE:

University of Louisiana at Lafayette
Intramural Complex Sports Lighting

UL PHYSICAL PLANT
THE UNIVERSITY OF LOUISIANA AT LAFAYETTE
P.O. BOX 43210
LAFAYETTE, LOUISIANA 70504

UL LAFAYETTE
UNIVERSITY OF LOUISIANA
PHYSICAL PLANT

STATE OF LOUISIANA
SCOTT J. BOUDREAUX
LICENSED PROFESSIONAL ENGINEER
ELECTRICAL ENGINEERING
6/23/16

ELECTRICAL SCHEDULES, LEGEND and DETAILS

NO SCALE

M&E CONSULTING
1304 BERTRAND DRIVE SUITE A6
LAFAYETTE, LOUISIANA 70506
(337) 234-7474 * FAX (337) 234-7774
Electrical Contact: DAVID CARROLL
david@meconsulting.com
PROJECT No.: 15064.00

PROJECT NO:	SHEET:
15064.00	E3.1
DATE: JUNE 2016	
SCALE: AS SHOWN	

PANEL SCHEDULE: "HL1" (NEMA 3R)

MOUNTING: SURFACE
A.I.C.: 42,000
MAIN: 400A L.O.
VOLT: 277/480
PHASE: 3
WIRE: 4

NOTES	SERVING POLE-AREA-CONTACTOR	CKT No.	LOAD CONN	LOAD DEM	BKR AMP.	WIRE	COND.	PHASE A B C	COND.	WIRE	BKR AMP.	LOAD CONN	LOAD DEM	CKT No.	SERVING	NOTES
1	S1-SOCCER-C1	1	1600	2000	30	4#10	1"		1"	4#10	30	2900	3625	2	P7-AREA 2-C15	1
		3	1600	2000								2900	3625	4		
		5	1600	2000	3						3	2900	3625	6		
1	S2-SOCCER-C2	7	1600	2000	30	4#10	1"		1"	4#10	30	2900	3625	8	P8-AREA 2-C16	1
		9	1600	2000								2900	3625	10		
		11	1600	2000	3						3	2900	3625	12		
1	S3-SOCCER-C3	13	1600	2000	30	4#10	1"		1 1/4"	4#8	30	2900	3625	14	P9-AREA 2-C17	1
		15	1600	2000								2900	3625	16		
		17	1600	2000	3						3	2900	3625	18		
1	S4-SOCCER-C4	19	1600	2000	30	4#10	1"		1 1/4"	4#8	30	3200	4000	20	P10-AREA 2-C18	1
		21	1600	2000								3200	4000	22		
		23	1600	2000	3						3	3200	4000	24		
1	V1-VOLLEY-C5	25	1600	2000	30	4#10	1"		1 1/4"	4#8	30	2400	3000	26	P11-AREA 2-C19	1
		27	1600	2000								2400	3000	28		
		29	1600	2000	3						3	2400	3000	30		
1	V2-VOLLEY-C6	31	1600	2000	30	4#10	1"		1 1/4"	4#8	30	3200	4000	32	P12-AREA 2-C20	1
		33	1600	2000								3200	4000	34		
		35	1600	2000	3						3	3200	4000	36		
1	P1-AREA 1-C7	37	2900	3625	30	4#10	1"		1 1/4"	3#6	30	1600	2000	38	WALKWAY-C21	1
		39	2900	3625					1 1/4"	3#6	30	900	1125	40	WALKWAY-C22	1
		41	2900	3625	3				1 1/4"	3#6	30	900	1125	42	WALKWAY-C23	1
1	P2-AREA 1-C8	43	2900	3625	30	4#10	1"				30			44	SPARE	
		45	2900	3625										46		
		47	2900	3625	3						3			48		
1	P3-AREA 1-C9	49	3200	4000	30	4#10	1"							50		
		51	3200	4000										52		
		53	3200	4000	3									54		
1	P4-AREA 1-C10	55	2400	3000	30	4#10	1"							56		
		57	2400	3000										58		
		59	2400	3000	3									60		
1	P5-AREA 1-C11	61	3200	4000	30	4#8	1 1/4"							62		
		63	3200	4000										64		
		65	3200	4000	3									66		
1	P6-AREA 1-C12	67	3200	4000	30	4#10	1"							68		
		69	3200	4000										70		
		71	3200	4000	3									72		
1	P7-AREA 1-C13	73	2900	3625	30	4#10	1"							74		
		75	2900	3625										76		
		77	2900	3625	3									78		
1	P6-AREA 2-C14	79	3200	4000	30	4#10	1"							80		
		81	3200	4000										82		
		83	3200	4000	3									84		

DEMAND LOAD: PHASE A= 65K PHASE B= 65K PHASE C= 65K
TOTAL LOAD 196 KVA
236 AMPS
NOTES:
(1) CIRCUIT VIA LIGHTING CONTROL AND MONITORING CABINET (CPR).

PANEL SCHEDULE: "LS1" (10 KVA INTEGRAL TRANSFORMER) (NEMA 3R)

MOUNTING: SURFACE
A.I.C.: 18,000
MAIN: 50A MCB
VOLT: 480V TO TRANSFORMER 120/240
PHASE: 1
WIRE: 3

NOTES	SERVING	CKT No.	LOAD CONN	LOAD DEM	BKR AMP.	WIRE	COND.	PHASE A C	COND.	WIRE	BKR AMP.	LOAD CONN	LOAD DEM	CKT No.	SERVING	NOTES
	LTG. CONTROL PANEL	1		600	20	3#12	1/2"		1	1	1			2	TVSS	
	LTG. CONTROL PANEL	3		600	20	3#12	1/2"				2			4		
	OUTLET	5		200	20	3#12	1/2"							6	SPACE	
	SPARE	7			20									8	SPACE	
	SPARE	9			20									10	SPACE	
	SPARE	11			20									12	SPACE	
	SPARE	13			20									14	SPACE	
	SPARE	15			20									16	SPACE	
	SPARE	17			20									18	SPACE	
		19												20		
		21												22		
		23												24		
		25												26		
		27												28		
		29												30		
		31												32		
		33												34		
		35												36		
		37												38		
		39												40		
		41												42		

DEMAND LOAD: PHASE A= PHASE C=
TOTAL LOAD . KVA
. AMPS
NOTES: . .
(1) SIZE PER MANUFACTURE'S REQUIREMENTS.

PANEL SCHEDULE: "LS2" 10 KVA INTEGRAL TRANSFORMER (NEMA 3R)

MOUNTING: SURFACE
A.I.C.: 18,000
MAIN: 50A MCB
VOLT: 480V TO TRANSFORMER 120/240
PHASE: 1
WIRE: 3

NOTES	SERVING	CKT No.	LOAD CONN	LOAD DEM	BKR AMP.	WIRE	COND.	PHASE A C	COND.	WIRE	BKR AMP.	LOAD CONN	LOAD DEM	CKT No.	SERVING	NOTES
	OUTLET	1		200	20	3#12	1/2"							2	SPACE	
	SPARE	3			20									4	SPACE	
	SPARE	5			20									6	SPACE	
	SPARE	7			20									8	SPACE	
	SPARE	9			20									10	SPACE	
		11												12		
		13												14		
		15												16		
		17												18		
		19												20		
		21												22		
		23												24		
		25												26		
		27												28		
		29												30		
		31												32		
		33												34		
		35												36		
		37												38		
		39												40		
		41												42		

DEMAND LOAD: PHASE A= PHASE C=
TOTAL LOAD . KVA
. AMPS
NOTES: . .

SQUARE D MINI POWER-ZONE
UNIT SUBSTATION OR EQUAL

PANEL SCHEDULE: "LS3" 10 KVA INTEGRAL TRANSFORMER (NEMA 3R)

MOUNTING: SURFACE
A.I.C.: 18,000
MAIN: 50A MCB
VOLT: 480V TO TRANSFORMER 120/240
PHASE: 1
WIRE: 3

NOTES	SERVING	CKT No.	LOAD CONN	LOAD DEM	BKR AMP.	WIRE	COND.	PHASE A C	COND.	WIRE	BKR AMP.	LOAD CONN	LOAD DEM	CKT No.	SERVING	NOTES
	OUTLET	1		200	20	3#12	1/2"							2	SPACE	
	SPARE	3			20									4	SPACE	
	SPARE	5			20									6	SPACE	
	SPARE	7			20									8	SPACE	
	SPARE	9			20									10	SPACE	
		11												12		
		13												14		
		15												16		
		17												18		
		19												20		
		21												22		
		23												24		
		25												26		
		27												28		
		29												30		
		31												32		
		33												34		
		35												36		
		37												38		
		39												40		
		41												42		

DEMAND LOAD: PHASE A= PHASE C=
TOTAL LOAD . KVA
. AMPS
NOTES: . .

SQUARE D MINI POWER-ZONE
UNIT SUBSTATION OR EQUAL

PANEL SCHEDULE: "LS4" 10 KVA INTEGRAL TRANSFORMER (NEMA 3R)

MOUNTING: SURFACE
A.I.C.: 18,000
MAIN: 50A MCB
VOLT: 480V TO TRANSFORMER 120/240
PHASE: 1
WIRE: 3

NOTES	SERVING	CKT No.	LOAD CONN	LOAD DEM	BKR AMP.	WIRE	COND.	PHASE A C	COND.	WIRE	BKR AMP.	LOAD CONN	LOAD DEM	CKT No.	SERVING	NOTES
	OUTLET	1		200	20	3#12	1/2"							2	SPACE	
	SPARE	3			20									4	SPACE	
	SPARE	5			20									6	SPACE	
	SPARE	7			20									8	SPACE	
	SPARE	9			20									10	SPACE	
		11												12		
		13												14		
		15												16		
		17												18		
		19												20		
		21												22		
		23												24		
		25												26		
		27												28		
		29												30		
		31												32		
		33												34		
		35												36		
		37												38		
		39												40		
		41												42		

DEMAND LOAD: PHASE A= PHASE C=
TOTAL LOAD . KVA
. AMPS
NOTES: . .

SQUARE D MINI POWER-ZONE
UNIT SUBSTATION OR EQUAL

PANEL SCHEDULE: "LS5" 10 KVA INTEGRAL TRANSFORMER (NEMA 3R)

MOUNTING: SURFACE
A.I.C.: 18,000
MAIN: 50A MCB
VOLT: 480V TO TRANSFORMER 120/240
PHASE: 1
WIRE: 3

NOTES	SERVING	CKT No.	LOAD CONN	LOAD DEM	BKR AMP.	WIRE	COND.	PHASE A C	COND.	WIRE	BKR AMP.	LOAD CONN	LOAD DEM	CKT No.	SERVING	NOTES
	OUTLET	1		200	20	3#12	1/2"							2	SPACE	
	SPARE	3			20									4	SPACE	
	SPARE	5			20									6	SPACE	
	SPARE	7			20									8	SPACE	
	SPARE	9			20									10	SPACE	
		11												12		
		13												14		
		15												16		
		17												18		
		19												20		
		21												22		
		23												24		
		25												26		
		27												28		
		29												30		
		31												32		
		33												34		
		35												36		
		37												38		
		39												40		
		41												42		

DEMAND LOAD: PHASE A= PHASE C=
TOTAL LOAD . KVA
. AMPS
NOTES: . .

SQUARE D MINI POWER-ZONE
UNIT SUBSTATION OR EQUAL

ELECTRICAL PANEL SCHEDULES

NO SCALE

M&E CONSULTING
1304 BERTRAND DRIVE SUITE A6
LAFAYETTE, LOUISIANA 70506
(337) 234-7474 * FAX (337) 234-7774
Electrical Contact: DAVID CARROLL
david@meconsulting.com
PROJECT No.: 15064.00

GENERAL NOTES

NO:	REVISIONS:	DATE:

University of Louisiana at Lafayette
Intramural Complex Sports Lighting

UL PHYSICAL PLANT
THE UNIVERSITY OF LOUISIANA AT LAFAYETTE
P.O. BOX 43210
LAFAYETTE, LOUISIANA 70504

UL LAFAYETTE
UNIVERSITY OF LOUISIANA
PHYSICAL PLANT

STATE OF LOUISIANA
SCOTTY L. BOURQUE
LICENSED PROFESSIONAL ENGINEER
ELECTRICAL ENGINEERING
6/23/16

PROJECT NO: 15064.00	SHEET:
DATE: JUNE 2016	E4.1
SCALE: AS SHOWN	

PANEL SCHEDULE: "MDL"

(NEMA 3R)

MOUNTING: SURFACE
A.I.C.: 42,000
MAIN: 500A MCB

VOLT: 277/480
PHASE: 3
WIRE: 4

NOTES	SERVING	CKT No.	LOAD CONN	LOAD DEM	BKR AMP.	WIRE	COND.	PHASE A B C	COND.	WIRE	BKR AMP.	LOAD CONN	LOAD DEM	CKT No.	SERVING	NOTES
	PANEL "HL1"	1		65K	400	4#500	4"		1"	3#10	30		1K	2	XFMR/PANEL "LS1"	(2)
		3		65K		1#3					2		1K	4		
		5		65K	3				1 1/4"	3#6	30		1K	6	XFMR/PANEL "LS2"	(2)
	TVSS	7			(1)	(1)	(1)				2		1K	8		
		9							1 1/4"	3#8	30		1K	10	XFMR/PANEL "LS3"	(2)
		11			3						2		1K	12		
	SPARE	13			100				1 1/4"	3#4	30		1K	14	XFMR/PANEL "LS4"	(2)
		15									2		1K	16		
		17			3				1 1/4"	3#4	30		1K	18	XFMR/PANEL "LS5"	(2)
	SPACE	19									2		1K	20		
		21												22	SPACE	
		23			3									24	SPACE	
		25												26		
		27												28		
		29												30		
		31												32		
		33												34		
		35												36		
		37												38		
		39												40		
		41												42		

DEMAND LOAD: PHASE A= 68K PHASE B= 68K PHASE C= 68K

TOTAL LOAD 204 KVA
245 AMPS

NOTES:

(1) SIZE PER MANUFACTURE'S REQUIREMENTS.

(2) CIRCUIT VIA LIGHTING CONTROL AND MONITORING CABINET (CPR).

ELECTRICAL PANEL SCHEDULE

NO SCALE

ELECTRICAL RISER NOTES:

(1) 2-5" CONDUITS IN DUCT BANK WITH 3#4/0 15KV UNDERGROUND CABLES, 1#4/0 AND ONE SPARE IN DUCT BANK. REFER TO PRIMARY DUCT BANK DETAIL.

(2) 300 KVA 277/480V 3 PHASE PAD MOUNT TRANSFORMER.

(3) 2 SETS OF 3" CONDUIT WITH 4#250 KCMIL IN EACH.

(4) #1/0 CU GROUND IN 3/4" CONDUIT TO (3)3/4"x10' COPPER CLAD GROUND RODS.

(5) SURGE PROTECTION DEVICE. REFER TO SPECIFICATIONS. SEE PANEL SCHEDULE FOR VOLTAGE.

(6) #6 TO GROUND ROD.

(7) REFER TO PANEL SCHEDULES FOR FEEDER SIZES. INSTALL PROPERLY SIZED NEUTRAL AND GROUNDING CONDUCTORS WITH ALL FEEDERS.

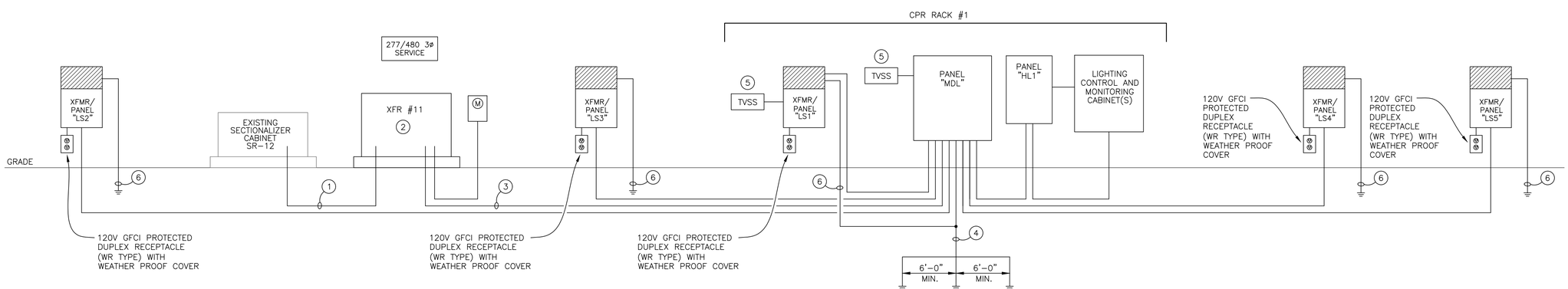

ELECTRICAL RISER

NO SCALE

M&E CONSULTING
1304 BERTRAND DRIVE SUITE A6
LAFAYETTE, LOUISIANA 70506
(337) 234-7474 * FAX (337) 234-7774
Electrical Contact: DAVID CARROLL
david@meconsulting.com
PROJECT No.: 15064.00

GENERAL NOTES

NO:	REVISIONS:	DATE:

University of Louisiana at Lafayette Intramural Complex Sports Lighting

THE UNIVERSITY OF LOUISIANA AT LAFAYETTE
UL PHYSICAL PLANT
P.O. BOX 43210
LAFAYETTE, LOUISIANA 70504

UL LAFAYETTE
UNIVERSITY OF LOUISIANA
PHYSICAL PLANT

STATE OF LOUISIANA
SCOTT J. BOURQUE
LICENSED PROFESSIONAL ENGINEER
ELECTRICAL ENGINEERING
6/23/16

PROJECT NO: 15064.00	SHEET:
DATE: JUNE 2016	E5.1
SCALE: AS SHOWN	