CITY OF BATON ROUGE
PARISH OF EAST BATON ROUGE
DEPARTMENT OF PUBLIC WORKS
SEWER ENGINEERING DIVISION

June 29, 2016

ADDENDUM NO. 3

TO: ALL BIDDERS

SUBJECT: MULTIPLE PUMP STATIONS (HIGHWAY 61 – PLANK ROAD)
CITY-PARISH PROJECT NO. 11-PS-MS-0035

ORGINAL BID DATE: Tuesday, June 14, 2016 at 2:00 PM
CURRENT BID DATE: Thursday, July 14, 2016 at 2:00 PM

The following revisions shall be incorporated in and take precedence over any conflicting part of the original contract documents:

PART 1 – UNIFORM CONSTRUCTION BID FORMS:

1. For paper sealed bidders, with reference to page UCBF 1 of 4 of Part 1, Uniform Construction Bid Form, the Bidder shall indicate the receipt of this addendum in the space provided. For online Bid Express bidders, an acknowledgement of this addendum will be prompted by the electronic bidding program prior to formally submitting the bid. Failure to indicate the receipt of this addendum shall be cause for the bid to be rejected.

2. Acting in accordance with Louisiana Revised Statutes 38.2212, (C)(1), the bid opening date is postponed by seven (7) calendar days. **Bids will be opened at 2:00 PM Thursday, July 14, 2016 in Room 806 of City Hall**, in lieu of 2:00 PM Thursday, July 7, 2016.

PART 2 – SPECIAL PROVISIONS AND CONTRACT DOCUMENTS:

1. For paper sealed bidders, with reference to page UCBF 1 of 4 of Part 1, Uniform Construction Bid Form, the Bidder shall indicate the receipt of this addendum in the space provided. For online Bid Express bidders, an acknowledgement of this addendum will be prompted by the electronic bidding program prior to formally submitting the bid. Failure to indicate the receipt of this addendum shall be cause for the bid to be rejected.

2. Acting in accordance with Louisiana Revised Statutes 38.2212, (C)(1), the bid opening date is postponed by seven (7) calendar days. **Bids will be opened at 2:00 PM Thursday, July 14, 2016 in Room 806 of City Hall**, in lieu of 2:00 PM Thursday, July 7, 2016.

PART VIII SANITARY SEWER WORK

SECTION 820 PUMP STATION DEMOLITION AND SITE RESTORATION:

820-13 DEMOLITION OF EXISTING PUMP STATIONS: Delete the last sentence of Subsection 820-13 a.4. and insert the following:

Fill remaining structures with flowable fill, using care to ensure that all voids, abandoned sewer lines, etc. are filled. Flowable fill shall conform to Section 911 of the 1997 Standard Specifications for Public Works Construction.

820-13 DEMOLITION OF EXISTING PUMP STATIONS: Delete the last sentence of Subsection 820-13 b. and insert the following:

Remaining holes (including all voids under existing pump station slabs adjacent to the demolition limits) resulting from demolition activities shall be filled completely with flowable fill. Flowable fill shall conform to Section 911 of the 1997 Standard Specification for Public Works Construction.

SPECIAL CONDITIONS

Division 11 – Equipment

1. **Section 11995 – Bioscrubber Odor Control System (PS 43):** In Subsection 2.01A1, second sentence, delete the words "Dwyer DM-2000" and add the following sentences at the end of the second sentence: "The Differential Pressure Transmitter (DPT) shall meet the odor control manufacturer's required communication protocol and be provided per Section 13543 of these Special Conditions. The DPT shall be mounted per manufacturer's written instructions to stainless steel unistrut".

2. **Section 11995 – Bioscrubber Odor Control System (PS 43):** On Page 11995-18, change the heading for this Subsection "20.9 – Process Support and Control" to read "2.09 – Process Support and Control". In Paragraph "A" of this same subsection entitled Recirculation Pump, first sentence delete the words "Without exception a recirculation pump, shall be provided," and replace with the following sentence: "A recirculation pump shall be provided, if required".

Division 13-Instrumentation and Controls

1. Delete Section 13505 in its entirety and replace with the attached Section 13505R Instrumentation and Controls – Process Control Narratives (PS 43).

Division 16 – Electrical

1. Delete Section 16450 in its entirety and replace with the attached Section 16450R-Switchboards.

2. Delete Section 16496 in its entirety and replace with the attached Section 16496R - Automatic Transfer Switch (PS 513).

3. Add the attached new Section 16497-Automatic Transfer Control System (PS 43) and insert into the Specifications Special Conditions.

DRAWINGS:

General Drawings:

1. Delete Sheet Nos. G-02, G-04, and G-07 and replace with attached Sheet Nos. G-02R, G-04R, and G-07R respectively.

Pump Station No. 43 Drawings:

1. Delete Sheet Nos. 43-C02, 43-C03, 43-C05, 43-S01, 43-S02, 43-A02, 43-E01, 43-E02, 43-E03, 43-E04, 43-E05, 43-E06, 43-E07, 43-E08, 43-E09, 43-I02, 43-I03, 43-I04, 43-I05, 43-I06, 43-I07, 43-I09, 43-I11 and 43-OC03 and replace with attached Sheet Nos. 43-C02R, 43-C03R, 43-C05R, 43-S01R, 43-S02R, 43-A02R, 43-E01R, 43-E02R, 43-E03R, 43-E04R, 43-E05R, 43-E06R, 43-E07R, 43-E08R, 43-E09R, 43-I02R, 43-I03R, 43-I04R, 43-I05R, 43-I06R, 43-I07R, 43-I09R, 43-I11R and 43-OC03R respectively.

Pump Station No. 105 Drawings:

1. Delete Sheet Nos. 105-C02, 105-C03, 105-C04, 105-C05, and 105-S03 and replace with attached Sheet Nos. 105-C02R, 105-C03R, 105-C04R, 105-C05R, and 105-S03R respectively.

Pump Station No. 124 Drawings:

1. Delete Sheet Nos. 124-C02, 124-C04, 124-C05, 124-S01, and 124-S03 and replace with attached Sheet Nos. 124-C02R, 124-C04R, 124-C05R, 124-S01R, and 124-S03R respectively.

Pump Station No. 513 Drawings:

1. Delete Sheet Nos. 513-C05, 513-C06, and 513-S04 and replace with attached Sheet Nos. 513-C05R, 513-C06R, and 513-S04R respectively.

2. Insert attached Sheet No. 513-S02, this sheet was inadvertently omitted from the original drawings.

STANDARD PLANS:

1. Insert attached Sheet Nos. 247-249 Standard Plan No. 502-01 Concrete Pavement Details (3 Sheets).

2. Insert attached Sheet Nos. 250-252 Standard Plan No. 907-03 Commercial Drive Details (3 Sheets).

COMMENTS AND QUESTIONS:

1. In Section 2.01 A.1, the specs call for brackets to mount a Dwyer DM-2000 Differential Pressure Transmitter. The Dwyer DM-2000 Differential Pressure Transmitter is not mentioned anywhere else within the Bioscrubber Odor Control System spec. The complete project specs however, do have a section (Section 13543) on pressure devices. Within that section the manufactures called out for Differential Pressure Transmitters are Smar LD301M/LD301D, Rosemount 3051/ 3051CD, Foxboro IGP10/IDP10, Siemens DS III, or equal. These differential pressure transmitters are significantly more robust and expensive than the Dwyer Model. Also within the P&ID drawing (drawing 043-OC003) a differential pressure **indicator** is shown rather than a

differential pressure **transmitter** so it unclear if what is needed is the differential pressure transmitter that is spec'd out in Section 13543, the differential pressure transmitter that would fit on the mounting brackets specified in Section 11995, or a differential pressure indicator as the P&ID indicates. Obviously there is a significant cost differential between these possibilities.

Please clarify the intent of the spec with regard to the above.

A differential pressure transmitter (DPT) shall be provided per this Addendum.

2. Similarly, in the P&ID drawing (Sheet No. 43-OC003). A differential pressure indicator is shown measuring the differential pressure across the blowers. However, within the Bioscrubber Odor Control System spec Section 20.9 F.8, the spec calls out that the fans need to have a low and high differential pressure set point. This is confusing because in order to have set points you would need to install a differential pressure transmitter, or pressure switches to trip the set points rather than just an indicator.

   Please clarify if the intent is to have a differential pressure gauge, switches or transmitters across the blowers.

   A differential pressure transmitter (DPT) shall be provided. DPT shall have an indicator. Refer to this Addendum.

3. Additionally, the Bioscrubber Odor Control System spec Section 2.07 calls for a specific air flow switch. It says to furnish and install on FRP ductwork at locations shown on plans. However, the plans do not show air flow switches anywhere so it is unclear where, or if and how many air flow switches are needed.

   Please confirm the number and location of required flow switches.

   Air flow switch shall be installed per manufacturer's written instructions on the common header on the discharge side of the blowers.

4. In the specifications for the odor control equipment there is a statement that "without exception, a recirculation pump will be supplied". This is the first time we have seen this requirement in the specifications. BioAir Odor Control systems do not use a recirculation pump. BioAir has multiple installations in the City of Baton Rouge currently (with others in submittal stage). Would it be possible to get the language change to "a recirculation pump will be supplied, if required".

   Refer to Special Conditions, Division 11 – Equipment, Item No. 2 included in this addendum.

5. Is there a standard detail for butt joints, construction joints, and expansion joints that was not included in the plans?

   Yes, see Standard Plan No. 502-01 Concrete Pavement Details, attached to this Addendum.

6. Sheets 105-CO2 and 105-CO3 show different slopes and elevations for the fill area, which sheet should be accepted as correct?

   See Sheet Nos. 105-C02R and 105-C03R, attached to this addendum.

7. Is river sand the preferred fill at all existing wet well sites?

   Existing pump station wet and dry wells shall be filled with flowable fill. Refer to this addendum.

8. Does the regarding at PS 124 include the existing asphalt drive and gravel surrounding the existing wet well? Is this to be removed and replaced with select fill?

   See Sheet No. 124-C05R attached to this addendum.

9. Sheet 43-C04 references Standard Spec 10-4 in regard to exercising of existing gate valves and what to do in the event that they are not in working order. The specifications we received do not include Section 10-4 in the Measurement and Payment Section, it goes from 10-2 to 10-6. Please include Standard Spec, or Special Provision 10-4 in an upcoming addendum.

   Section 10-4 refers to the 1997 Standard Specifications for Public Works Construction. See Page SP 1 of 324 of the Special Provisions on how you can obtain a copy of the Standard Specifications.

10. Please confirm the Existing Pump Station 43 may be modified structurally in order to remove the existing pumps per Note 3 which requires the Contractor to submit a sequence of construction for approval. These pumps are located approximately 28' deep, with the only access being a stairwell or a 4'6"x5'6" access hatch.

    The existing pump station may be modified structurally to accommodate the Contrator's means and methods. However, all structural modifications shall be designed by a State of Louisiana licensed Structural Engineer and shall be submitted for review and approval prior to any structural modifications being made.

11. Please confirm that "ceramic lined" is not the same as "epoxy lined" in regard to Ductile Iron Pipe. There are numerous instances, but one example, Sheet 124-C02 Note 5 calls for "ceramic lining" of Ductile Iron Pipe. Please confirm that the Engineer's intend, is to have this pipe Epoxy lined with 401 in accordance with Spec Section 804 and the QPL, and that ceramic lining is not required for this project. Ceramic lining in lieu of 401 lining is a significant cost difference.

    These terms for this project mean the same thing. The intent is that all Ductile Iron Pipe and fittings conform to Section 1016-2.3(f) of the Special Provisions for approved Ceramic Epoxy pipe and fitting lining materials.

12. Please confirm that "Structural Fill" includes the site work to bring the sites to grade, and does not only include the immediate fill around the structures themselves. There is a significant amount of general site fill at some of these sites, bringing the grade up 6' in some cases. It appears that the profiles indicate that all site fill will be considered structural, which must be imported select fill, correct?

    All required fill shown shall be "Structural Fill". If the insitu soil being excavated for the installation of the pump station wet wells, does not meet the requirements for structural fill, structural fill will then need to be imported and all the excavated material shall be removed from the project work site.

13. Please confirm that Note 1 on Sheet 513-C-02 would fall under Standard Spec 10-4 in regard to exercising of existing valves and what to do in the event that they are not in working order. This spec section is not included in the Measurement and Payment, please include Spec Section 10-4.

    If applicable, Section 10-4 of the Standard Specifications for Public Works Construction would apply. However, we have been advised that all valves were in good working order.

14. Please indicate whether there will be special work hours on Pump Station 105, due to its proximity to a residence, or whether special provisions will be needed by the Contractor such as sound attenuation, line of sight mitigation, special monitoring, etc.

    It is recommended that the Contractor not begin work at this pump station site no earlier than 7:00 A.M. See Section 9-5 of the Special Provisions for other requirements. Contractor shall follow the Parish noise ordinance and vibration monitoring specification (Section 5-11.1 of the Special Provisions).

15. Will the date be postponed?

    Refer to this Addendum.

16. Please confirm that the existing MCC and VFDs at Pump Station 43 will need to be protected from the elements during demolition of the existing Electrical room roof, until the existing electrical building is dried in, new gear and VFDs set, and that the Contractor must provide temporary shelter until such time.

    The existing pump station is to remain in full operation and the roof is not to be demolished. If warranted the Contractor will need to protect the existing and new electrical equipment during the re-roofing operation if rainy conditions are encountered. Therefore both the existing and new equipment shall be protected from the weather at all times.

17. General Note A, Sheet 43-C02 states that the Contractor is responsible for de-mucking all existing stump holes, and any other areas of poor subgrade, excavate to suitable, backfill and compact. There is no way to determine the quantity of poor subgrade, please include an estimated quantity of subgrade restoration by the Engineer or Owner so that all bids are equal, or add a bit item to be paid on a unit price basis by actual quantity.

    This note has been deleted for this pump station site, see Sheet No. 43-C02R attached to this addendum.

18. Please confirm the Average and Peak flows for Pump Station No. 43, and confirm that Bid Item 9999993 is only required in the event that the existing gate valves are not operable.

    Dry Weather Flow 2,000 GPM
    Wet Weather Flow 9,000GPM

    Bid Item 9999993 will be payment for temporary bypass pumping if existing suction and discharge gate valves are not operable per Section 01140, Paragraph 3.3.D of the Special Conditions.

19. The bid documents indicate that the Contractor shall conform to the requirements of the Consent Decree and references the full document on the SSO Program website. This is a large document; can you provide clarification or direction on which sections of the Consent Decree are applicable? Can you clarify if Contractor may be subject to damages in addition to liquidated damages if the work is not completed on time?

    The Consent Decree requires that the C-P notify all parties involved that the C-P is under a consent decree, that the project is directly related to the said Consent Decree, and to make all the Consent Decree documents available to those parties involved. Damages for failure to complete the work on time will be in accordance with Section 9-8.3 of the Special Provisions. Per the contract time, all work associated with this contract is expected to be complete well before the final Consent Decree milestone date.

20. On Sheet 105-C02, the 8" new Force Main is tying into the existing force main without stopping flow back to the existing Pump Station. Should there be an additional Plug valve on the existing Pump Station side or are we just to put the plug valve shown on the existing line on the pump station side of the tie-in?

    Yes, see Sheet No. 105-C02R, attached to this Addendum.

21. Is a project sign required at each pump station site?

    No, only two signs for the entire project.

22. Drawing 124-C02 plan and profile calls out the wet well invert at EL. 74.5. Drawing 124-S01 shows the invert at EL. 77.5. Please clarify.

    The required invert elevation is 74.5. See Sheet No. 124-S01R, attached to this addendum.

23. Drawing 105-C02 states that the existing pump station wet well is to be abandoned with flowable fill. Drawing 105-C05 states to backfill fill with river sand. Please clarify.

    The existing pump station will be abandoned with flowable fill. See Sheet No. 105-C05R, attached to this addendum.

24. Specification section 820 states that river sand is to be used to backfill the demolished pump stations. Drawing 105-C02, 124-C05 and 513-C06 note for the demolished pump stations to be filled with flowable fill. Please clarify.

    The existing pump station will be abandoned with flowable fill. Refer to Section 820 of this addendum.

25. Is a separate office trailer required for the engineer?

    No.

26. Please provide the diameter of the existing PS105 metal well on drawing 105-C05.

    The estimated diameter of the existing steel dry well is 8 feet.

27. In regards to Instructions for Submitting Bids, item 1 "Submit Part 1A, Bid Forms Required by Statute Or By The Louisiana Administrative Code" is to be submitted prior to the opening of bids.

    SP 4 of 324, paragraph 2-8.1 states the above "shall be submitted prior to the opening of all bids related to a contract for public works either enclosed in a separate envelope or included in their sealed bid envelope".

    Please clarify if the "Part 1A" forms can be submitted with the bid.

    Part 1A forms can be submitted with the bid.

28. Are pump station electrical conduits required to be encased in concrete as depicted on drawing G-13?

    Refer to Section 16130 of the Special Conditions. PVC Schedule 40 conduit is required to be encased in red tinted concrete. Direct burial of PVC-coated rigid galvanized steel conduit is allowed with no concrete encasement.

29. Can the minimum pump efficiency for Pump Station 105 pumps be changed to 53 percent (53%)?

    The minimum pump efficiency for Pump Station 105 pumps was revised to 53 percent (53%). Additional revisions were also made to the pumps being supplied at the other three (3) pump stations. Please see Sheet Nos. 43-C05R, 105-C04R, 124-C04R, and 513-C05R for all pump revisions attached to this addendum.

RECOMMENDED:

STATE OF LOUISIANA
JEROME M. KLIER
Reg. No. 11591
REGISTERED
PROFESSIONAL ENGINEER
IN
CIVIL ENGINEERING

6/29/16

Jerome M. Klier, P.E.

STATE OF LOUISIANA
JARROD C. TRAMONTE
License No. 31541
PROFESSIONAL ENGINEER
IN
ENVIRONMENTAL ENGINEERING

6/29/16

Jarrod C. Tramonte, P.E.

STATE OF LOUISIANA
DESIREE A. DIES
License No. 37748
PROFESSIONAL
ENGINEER
IN
ENVIRONMENTAL ENGINEERING

06/29/16

Desiree A. Dies, P.E.

APPROVED:

Adam M. Smith, P.E.

SECTION 13505R

INSTRUMENTATION AND CONTROLS - PROCESS CONTROL NARRATIVES (PS 43)

PART 1 - GENERAL

1.01 CONTROL LOOP NARRATIVES

A. General Requirements

1. The following control loop descriptions shall be used in conjunction with the conformed construction documents.

2. Bumpless transfer shall be applied to all software programming when transferring between automatic modes, automatic/manual modes, Local/Remote modes, or Local/Remote automatic modes of operation. Bumpless transfer includes set point tracking, process variable tracking, and tracking of open/close, on/off, speed, or position such that transfer from one mode to another does not affect processor outputs that could impact or "bump" the process. When indicated in the drawings or specifications for a particular piece of equipment, the specific intent of bumpless transfer is to permit startup locally and then transfer to computer manual or computer auto (such as in a lead/lag algorithm) without "bumping" the process or requiring shutdown of equipment. Once in computer mode, transfer from manual to automatic operation is accomplished without process disturbance utilizing set point tracking of the process variable.

3. For all controlled devices, if a device is commanded to start or stop by the programmable logic controller (PLC) and the device feedback state does not match the commanded state within a preset time, an equipment command fail alarm shall be generated by the PLC for display and alarming at the Local Control Panel (LCP)/ Operator Interface Terminal (OIT) and the device shall be commanded to stop. If a device feedback state does not match the commanded state at any time, excluding the change of state described above, and a preset time delay expires, an equipment command fail alarm is generated by the PLC for display and alarming at the LCP/OIT and the device is commanded to stop. After a command fail alarm occurs, the device cannot be started again until a Reset has been issued at the LCP/OIT. The local PLC OIT shall be labeled with the critical I/O functions, such as starting/stopping a pump, changing a pump mode, changing a pump set point and ways to view critical information, such as wet well level.

4. For all controlled valves, if the valve is commanded to open or close by the PLC and the valve feedback state does not match the commanded state within a preset time, a valve command fail alarm shall be generated by the PLC for display and alarming at the LCP/OIT and the commanded state shall remain the same. If the valve feedback state does not match the commanded state at any time, excluding the change of state described above, a valve

command fail alarm shall be generated by the PLC for display and alarming at the LCP/OIT and the commanded state shall remain the same.

5. For all analog modulating valves, if the valve is commanded to open or close to a specific position and the position feedback signal deviates from the commanded position by a preset dead band for a preset time period, a valve deviation alarm shall be generated by the PLC for display and alarming at the LCP/OIT.

6. Runtimes for all motorized equipment shall be totalized at the PLC as well as by local hardware non-resettable hour runtime totalizers.

7. All process flows shall be totalized at the PLC.

8. For flowmeters, when respective outlet valves are closed or when no pumps are running, the PLC respective flow totalizer will be coded as to not accumulate values caused by noise or errors in calibration.

9. When valves are closed or no pumps are running, the analog flow signal associated with the well shall not generate a low flow alarm.

10. For all pumps of at least 75 horsepower, a delay timer shall be implemented at the PLC such that after the pump is shut down, the pump is not capable of being re-started until the timer expires. This time should be 60 seconds, unless otherwise specified on a drawing.

11. All analog and discrete scaling ranges necessary to program this system shall be determined from project specifications or manufacturer data sheets.

12. For all Variable Frequency Drive (VFD) pumps and feed systems, if the pump is commanded to run at a specific speed and the speed feedback signal deviates from the commanded speed by a preset dead band for a preset time period, a speed deviation alarm shall be generated by the PLC for display and alarming at the LCP/OIT. Pump startup and stop time especially must be ignored for deviations for preset times due to mechanical delay.

13. All tuning parameters for each PLC software PID controller shall be entered at the OIT. Tuning trends shall be provided to tune and monitor the PID operations. Tuning parameters settings shall be password protected.

14. All alarms and control set points shall be entered at the OIT. The alarm and control set points shall be password protected.

15. Each VFD will have a local On-Off-Remote switch. All pumps will follow the following operation information. It is expected that the VFD have dual set points built into the drive. One set point for “local” and another analog set point for “remote” operations.

a. When the remote switch is in On, the pump will run assuming no pump interlocks are blocking the pump from running. The speed will be controlled by the local VFD set point.

b. When the remote switch is in Off, the pump will stop.

c. When the remote switch is in Remote, the VFD will respond to the PLC commands and programs. The pump will come up in PLC Manual mode if the prior switch was in Off or On position. The operator must change the pump state from Manual to Remote for the pump to be able to enter into the normal PLC control sequence described later. In Manual (PLC), the operator can control the pump through a local operator block in the OIT interface. In Remote (PLC) the start/stop and speed will be controlled by the pump logic.

d. The PLC shall receive pump alarms such as high temperature, moisture, intrusion and pump fail signals. Each alarm condition shall be individually displayed on the local OIT and shall be available for retransmission to the future SCADA system.

e. Each pump shall have a limit switch on the discharge check valve which can shutdown/block the pump if the valve is not open. Each pump will alarm if the check valve is not at least 20% open when the pump is running. The alarm will have at least a 30 second delay to allow time for the pump to initially get up to speed and to avoid other nuisance alarms during transient conditions.

f. Status indicators for pumps will include the following "Status Conditions":

Pump running/stopped
Pump in Local/Remote (switch state)
Pump in Manual/Auto (PLC state)
Pump in Lead/Lag-1/Lag-2/Lag-3
Pump speed %
Pump alarms such as pump moisture or temperature or bearing temperature
Pump enable signal as shown by relay monitoring pump enable signal
All status signals shall be available for retransmission to the future SCADA system.
Pump Fault

g. In all control modes, the pump shall have a hardwired interlock to stop/block the pump from running for all Interlock conditions. The following interlocks are temporary in that the pumps will be blocked from running as long as these conditions exists. These conditions include the following:

LoLo level in well
High pressure on outlet of pump through a relay with a TDO of 30 sec
Field adjustable timing
Hi pump motor temperature

h. If the PLC is in control, it will monitor the run status of all pumps regardless of pump state of manual or remote. At no time should all pumps be allowed to run, the last pump will have its "enable drive" signal driven to block the pump from starting even if some of the VFDs are in Local operator mode.

i. At no time shall the PLC start a pump sooner than 60 seconds after the previous pump start. This includes a power failure which shall not start any pumps for up to 60 seconds after pump power is restored.

j. On OIT, the pump symbol shall be a selectable target which retrieves the respective control overlay display. The overlay display shall contain control targets which allow selection of pump control modes (auto/man), manual pump control (start/stop and speed), mode (Lead, Lag-1, etc), service mode (out-of-service), and shall duplicate status indicators as mentioned earlier. All status and alarm signals that are displayed on the OIT shall be available for remote indication at the future SCADA system.

k. It is expected that any pumps taken out of service will have the VFD switch put in the "Off" position as well as putting the pumps in the "out of service" mode in the PLC so that the PLC programming can properly ignore the pumps that are out of service.

l. When a pump is in Local (switch) or Manual (PLC), that pump shall be flagged as out of service for the PLC. If the pump is in auto and the pump fails to start when commanded, it shall be removed out of the control rotation scheme and marked as "out of service" and will remain in that state until the operator puts the pump back into service. An alarm will be generated any time a pump is taken out of service regardless of reason.

m. All available pumps shall rotate roles after the current lead pump shuts down Upon stopping of the Lead pump by the PLC control scheme, the role of the pump shall be rotated to the last available run role so that it is not restarted until all the other pumps have had an opportunity to run. Pumps not in "remote" (hardware switch) and not in "auto" (PLC flag) shall be ignored from the automatic rotation.

16. LoLo, low, Hi, and HiHi alarms shall be provided for all analog signals at the OIT. All analog signals will have a minimum of a 2% dead band to minimize nuisance alarms.

17. For analog points, under-range (loss-of-signal) alarms shall be generated by the PLC for display and alarming.

18. PLC system diagnostic status and alarming shall be displayed and alarmed at the OIT for conditions such as communication status/failure and hardware status/failure.

19. Alarms shall be capable of being acknowledged and reset at any OIT location provided the proper login credentials are entered.

20. All OITs shall require the operator to log in before changing process variables or operating equipment. Different levels of security shall be configured so that certain plant functions can be performed only by certain plant personnel.

21. PLC design shall incorporate some type of failure notification whenever a pump is shutdown automatically.

22. At power failure, the ATS shall generate, via a contact closure to the PLC, a request for the generators to start. The PLC shall start both generators and once the ATS gets the "generator circuit breaker closed" contact, the ATS shall switch power source to the generators. After 5 minutes on generator, the PLC shall begin the LBGC (Load Based Generator Control) function. The PLC shall run only the number of pumps so that the available generator KW capacity is not exceeded. If the pump load is less than four pumps and the 600 KW generator is running, then the 200 KW generator shall be shutdown via the PLC run/stop signal to the 200 KW generator.

    When on generator, each time a pump needs to start or shut down, the PLC shall do the LBGC which calculates the KW needed to run the pump load demand. Under normal operation the 600 KW generator shall not be shut down and only the 200 KW generators shall be started/stopped as needed. If only the 200 KW generator starts and the 600 KW generator fails, then only 1 pump shall be allowed to run. All generators shall be monitored by the PLC for running status, faults, low battery conditions, low fuel and any other applicable faults.

Signals from **each** of the generator to PLC

Generator "on"	contact closure when on
Generator has a fault	contact open when fault
Generator has low fuel	contact open when low fuel level
Generator has low battery volt	contact open on low battery voltage
Generator circuit breaker on	contact closed when circuit breaker closed
Generator fuel leak	contact closed on no leak

Signals from ATS to PLC

ATS is in Auto	contact closure when in Auto
Utility Main breaker closed	contact closure when breaker closed
Gen Main breaker closed	contact closure when breaker closed
Start generators	contact input to indicate Utility power loss

Signals from PLC to 600 KW generator

Start/stop generator	contact closure to start/run

Signals from PLC to 200 KW generator

Start/stop generator	contact closure to start/run

Signals from generator controller to ATS

Generator is On	contact closure when on
Generator CB is closed	contact close when CB closed

23. One combustible gas detector will provide the PLC with the current analog combustible gas level as well as a Hi and a HiHi digital input to generate alarms in the PLC and at the OIT as well as sound appropriate horn and light alerts. When the combustible gas detector triggers a high level input, then the OIT will generate an alarm and turn on the "yellow" outside warning light. When the combustible gas detector triggers a HiHi level input, then the OIT will generate an alarm and turn on the "red" outside warning light.

24. A well level switch shall be incorporated into the bubbler such that a LoLo level will prevent any pumps from starting in the well regardless of whether the pump is in manual or auto modes. The LoLo lock out will only stop the pumps while the LoLo is true.

25. All valve open and close limit switches, level contacts or pressure switches will be DPDT. When a device cannot support DPDT, relays will be added to replicate a single contact into a minimum of a DPDT. Valve and limit switch contacts will be "closed" when the PLC is okay to run (non-alarm condition).

B. General control description

Pump control scheme description

Note: All El x.y elevations shall be dynamically adjustable as part of operations. The percent speed triggers shall also be adjustable as part of operations. All triggers will be password protected from changes. Elevations are from bottom of bubbler tube in well and may require some adjustments

1. Lead pump – If the well level rises and reaches EL 7.45'or higher and it has been more than 60 seconds since any previous auto mode pump has been run, then the Lead pump will start. The initial pump speed will be set at 50%. The pump speed will be controlled by the same PI control loop scheme that is driving all running auto pumps, If the level drops below EL 6.57' then all pumps shall shutdown and pump roles shall rotate. The Lead pump role shall then go to the current Lag1 pump and the role rotation shall continue for all pumps such that the Lead pump that was just running will be the last pump to restart again.

2. Lag-1 pump – If the level goes above EL.8.32 for 30 seconds and more than 60 seconds from the Lead pump starting, then the lag-1 pump will start. The initial set point for the lag-1 pump will be 50% and the pump will increase its set point over 1 minute to the PI operating set point and after that be totally controlled by the PI level control loop in step 1. If the pump speed falls to and stays at 50% for 60 seconds, then the current lead pump shall shutdown and the pump roles will rotate.

3. Lag-2 pump – If the level rises above EL 8.9' for 30 seconds and it has been more than 60 seconds since the Lag-1 pump started then the Lag-2 pump will start at 50% set point and increase over the next minute to match the PI set point and then lock into the PI controller set point from then on. If the pumps speed falls to 60% or less for 60 seconds, then the current Lead pump will stop and the pump roles will rotate as described before

4. Lag-3 pump – If the level goes/stays above EL 10.0' for 30 seconds and it has been more than 60 seconds from the start of the Lag-2 pump, then the Lag-3 pump will start at 50%. The pump will increase its speed over the next minute to the current PI set point and then will lock into the PI controller with the other If the pump speeds falls to 70% for 60 seconds, then the current Lead pump will shutdown and the pump role rotation will happen as described before.

5. If a pump is not in "remote", or fails to start when commanded, it shall be removed from the pump rotation scheme and the spare will be brought in to the control scheme.

Pump Control Summary trip points

Note: All setpoints below will be software adjustable at any time through the OIT.

Hi-Hi alarm	EL 11.0'
Start lag-3 pump	EL 10.07'
Start lag-2 pump	EL 8.9'
Start lag-1 pump	EL 8.32'
Start lead pump	EL 7.45'
Well level setpoint	EL 6.0'
Stop all pumps	EL 6.5'
Low Level lockout/ Cutoff and alarm	EL 4.0' (reset at EL 6.5')

Low-low well level alarm (level switch at EL 4.0', resets on EL 6.5')
High-high well level alarm – level switch at EL 11.0'
High or low bubbler alarms at EL 11.0' (high) and EL 4.5' (low)

The LoLo water levels shall be hardwired into the pump VFD to stop them immediately at the low-low level. The level devices will have appropriate dead band.

1.02 SCOPE OF WORK

A. To assist the Process Control System Supplier (PCSS) in determining the scope of work, a series of process and instrumentation drawings (P&IDs) and details are provided. Unless specifically stated otherwise, the PCSS shall be responsible for providing all instrumentation, control equipment, and

auxiliary devices necessary to perform the functions specified herein and as shown and described on these diagrams. Any auxiliary devices such as lightning/surge protectors, relays, timers, signal isolators, signal boosters, etc. which are necessary for complete operation of the system, or to perform the functions specified, shall be included whether or not they are specifically shown or tabulated on P&IDs.

B. The intent of the P&IDs is to describe in as much detail as possible, the hardware, software and functional requirements of a process measurement and control system. They are not intended to convey requirements for conduit and wiring between panels or system components. This information is included in appropriate electrical specifications and Drawings. Any additional wiring or raceway required for a fully operational system shall be provided at no additional cost to the owner.

1.03 OVERALL PROCESS

A. Gravity Influent Pump Station

1. The Gravity Influent Pump Station (GIPS) conveys wastewater to the wastewater pipeline system. The existing pumps shall be replaced by higher HP submersible pumps for high water/wet weather conditions. These pumps shall be controlled by Variable Frequency Drives (VFD). Signals from the VFDs shall be communicated to the PLC with analog and digital inputs/outputs. Hardwired signals for the individual equipment in the Pump Station shall be connected to the local PLC panel.

B. Odor Control for Existing Gravity Influent Pump Station

1. The odor control equipment will operate as specified in Division 11 and currently as defined has no applicable control connections. Monitoring of the Odor control system will be accomplished with the following contact provided by the Odor Control System to the PLC:

Odor Control system trouble alarm

1.04 RELATED WORK

A. Electrified mechanical equipment requiring controls, as discussed in this section, is covered in Section 11.

B. Electrical equipment, including wiring and other appurtenances, is covered in Section 16

PART 2 - CONTROL LOOP DESCRIPTIONS

2.01 CONTROL LOOP DESCRIPTIONS

General

A. The control system will operate as a single level control system. This single level system will feed all active pumps to run at the controlled speed to maintain the water well level to the desired set point level. The system will continue to change the pumps speeds from 50% up to a max 100%. At the desired trigger levels and appropriate delay times, the system will add or remove pumps as needed. The Lead pump will always be the first pump to shutdown and then the Lag-1 pump will assume the Lead role and all other pumps will propagate each of their own new roles. One pump will normally be designated "spare" and will only join the pump rotation should a pump be turned offline, maintenance by an operator, or if a pump fails to start. A pump will remain "off" or "failed" until an operator manually changes the pump state back to either spare or a lag pump. Changes to pump state will only be done after an operator log in. At no time shall all pumps be allowed to run, even if a pump is operated completely in "local" mode, the hardware interlock pump system will still count the pump as running.

B. Each pump Systems 05-01 through 05-05 will include the following equipment: Tags for pump P-05-01 shown for clarity:

Pump/pipe system		
Pump	P-05-01	
Check valve	ZA-05-01	Open/close
High Outlet pressure TDO relay switch		
	PAH-05-01	Hi/normal
Pump Monitor (Mass711 or equivalent)		
Pump Hi temp	TAH-05-01	Hi Temp/normal
Pump moisture	YAH-05-01	Hi Moisture/normal
VFD drive		
Speed set point	SY-05-01	normal range 50-100%
Actual speed	ST-05-01	0-100%
System Reset	UY-05-01	Reset/normal
Drive Run	EY-05-01	Run/stop
Drive fault	UA-05-01	Drive auxiliary fault
Reset all	UY-05-01	reset all VFD devices
Drive run state	YI-05-01	Running/Stopped
Drive in remote	ZSR-05-01	Remote/manual
Drive current	IT-05-01	VFD output current
Hand switch	HOA-05-01	On-Off-Remote switch

The previous description is for all pumps from P-05-02 to P-05-05.

1. P&ID drawings

   a. GIPS pump running/stopped/fault shall be indicated at the PLC's OIT and at the VFD panel.

   b. The pump runtime shall be indicated and recorded on the OIT as well as on a local non-resettable hour meter located on the VFD drive.

   c. Pump Motor Temperature High shall be alarmed at the PLC's OIT as well as an indicator light at the VFD panel.

   d. Pump Motor leak shall be alarmed at the PLC's OIT as well as an indicator light at the respective VFD panel.

   e. High Pump motor bearing temperature shall be alarmed at the PLC as well as the respective VFD panel.

   f. Pump Speed shall be indicated at the PLC's OIT as well as the VFD HMI panel.

   g. Pump check valve, ex. ZA-05-01 Open/Close, shall be indicated at the respective VFD panel.

   h. Under normal operating conditions no more than 4 pumps shall be allowed to run. The system shall be electrically interlocked to prevent more than 4 pumps from running, even if the operator uses "manual" mode on some of the pumps.

   j. An On-Off-Remote selector switch shall be provided at the VFD drive panel and switch selection "remote" state shall be wired to the VFD panel for control use and be displayed on the OIT.

   k. Switch "Local" Mode VFD
   When drive switch is set to On, the drive shall run and speed will be set through the local VFD HMI manual set point. When drive switch is "Off" the drive will stop.

   l. Switch "Remote" Mode -VFD:

      1) OIT - PLC Manual mode:

         i. Pump Start and Stop mechanisms shall be provided at the PLC's OIT.

         ii. A Pump speed set point shall be entered at the OIT.

         iii. The pump outlet gate will be manually operated only from the

corresponding hand switch station but will act as software interlocks to prevent a pump from starting if the outlet valve is not open.

iv. Even in Manual mode all the normal drive "inhibits" will still function.

2) OIT – PLC Automatic mode:

i. Pumps shall be operated in a lead/lag1/lag2/lag3 configuration to evenly distribute the runtime. The spare pump will not be involved in the running roles unless a pump fails or is taken offline by an operator. In the automatic mode the Lead pump will stop and the Lead role will rotate to the next Lag1 pump and the rotation will continue through all the Lag pumps. The Lead/Lag rotation shall take place when a Lead pump is requested to shut down or if the lead pump fails to start. If more than one pump is running, the Lead pump shall be the first to shut down and the Lag1 pump shall become the Lead and the other Lag pumps will rotate roles accordingly.

ii. The pump operation shall be interlocked with the discharge check valves status high pressure relay by driving the drive enable signal to disable. The interlock description is the same as that for the Manual mode of operation.

iii. Pumps shall operate based on the bubbler level and the desired operator level set point level in the well using the OIT interface.

iv. Pump operating status such as maintenance, pump OK, etc. shall be operator settable from the PLC's OIT.

v. In the case when more than one pump is running, the pumps shall be operated at the same speed for efficiency. When a pump is started it will be started at the 50% output and then change its speed until it agrees with the desired pump set point speed as calculated by the PLC. At that time, all pumps will continue to operate with the same speed set point as created by the level controller.

vi. The pump speed shall be varied according to a PID loop running on the PLC which will work to maintain the programmed level in the well.

vii. At no time should more than max pumps minus one ever be allowed to run, even if some pumps are started in manual mode. Upon the max number of pumps running, the pump max hardware

relays shall then drive the disable on the non-running pump VFD. Once the number of pumps is below max number of pumps minus one the drive enable signal will be restored to previous state.

D. The LoLo level switch located in the system bubbler will interface with both the VFD pumps as a drive disable when the well is in LoLo level and a call for "help" that water level is too low will be generated.

1. The LoLo level relays are driven by the LoLo level switch and are inserted into the VFD drive enable such that LoLo will block any VFD from starting. The HiHi level sensors will be wired to the PLC and will generate alarms to indicate the discrete level sensors have tripped. No bypass is provided for these level switches, because only an alarm is generated and nothing stops the control process from running.

2. The normal well LoLo and HiHi level switches will be separate from the emergency system LoLo and HiHi level switches.

E. Outlet flow meters: FIT-05-01

1. Flow meter functions

a. Flow meters shall totalize all individual flow meters as well as the sum of the flows out of the system.
b. Totalizers shall be designed to ignore noise signals when pumps are not on or output valves are not open.

F. Generator monitoring and control

1. Generators will be monitored for all alert and fault conditions. Additionally, the PLC will be capable of starting the generators from the PLC programming or OIT.

a. Low fuel
b. Low battery voltage
c. Generator fault
d. Generator circuit breaker is open/closed.

2. When switching onto generator power or back to utility power, the PLC shall shutdown all current running pumps, do a pump role rotation and then let the pumps restart under the normal pump start sequence.

G. General PLC monitoring

1. PLC system components such as power supplies, PLC faults, etc shall be monitored by the PLC and generate alarms appropriate to the alert condition.

2 Additional alarm inputs may be needed depending on actual design

H. External alarms

1. The PLC system shall monitor the combustible gas analyzer for both the analog continuous combustible level and the discrete Hi and HiHI contacts and alarm the OIT as needed and generate appropriate alarms. Additionally when a high combustible gas level is detected both the horn and alarm light will be turned on.

2. Alarm light will remain on as long as the alarm condition exists.

3. The alarm horn will have a panelbutton or an OIT acknowledge button to silence the horn.

4. The "Odor control system" shall provide contact openings (fail safe) for the following defined conditions.

    a. Odor system trouble alarm

END OF SECTION

SECTION 16450R

SWITCHBOARDS

PART 1 - GENERAL

1.01 SCOPE OF WORK

A. Furnish and install a free standing dead front type switchboard, with automatic transfer switch, utilizing group mounted circuit protective devices as shown on the drawings and as specified herein.

1.02 REFERENCE STANDARDS

A. NEMA PB 2 Deadfront Distribution Switchboards

B. NFPA 70 National Electrical Code

C. UL 467 Grounding and Bonding Equipment

D. UL 489 Molded-Case Circuit Breakers, Molded-Case Switches, and Circuit-Breaker Enclosures

E. UL 891 Switchboards

F. UL 1449 Transient Voltage Surge Suppressors

G. UL 1283 Electromagnetic Interference Filters

H. ANSI/IEEE C62.41.1-2002 IEEE Guide on the Surge Environment in Low Voltage (1000 V and Less) AC Power Circuits; C62.41.2-2002 - IEEE Recommended Practice on Characterization of Surge Voltages in Low Voltage AC Power Circuits; and C62.45-2002 - IEEE Recommended Practice on Surge Testing for Equipment Connected to Low-Voltage AC Power Circuits.

1.03 SUBMITTALS

A. Submit in accordance with Section 01300, Shop Drawings and product data for the following:

1. Switchboard Drawings: Include wiring diagrams and installation details of equipment indicating proposed location, layout and arrangement, control panels, accessories, piping, ductwork, and other items that must be shown to ensure a coordinated installation. Wiring diagrams shall identify circuit terminals and indicate the internal wiring for each item of equipment and the interconnection between each item of equipment. Drawings shall indicate adequate clearance for

operation, maintenance, and replacement of operating equipment devices. Submittals shall include the nameplate data, size, and capacity.

2. Switchboard Product Data

3. Switchboard Design Tests

4. Switchboard Production Tests

5. Acceptance Checks and Tests

6. Switchboard Operation and Maintenance

7. Assembled Operation and Maintenance Manual

8. Equipment Test Schedule

9. Request for Settings

1.04 QUALITY ASSURANCE

A. Switchboard Product Data

1. Each submittal shall include manufacturer's information for each component, device and accessory provided with the switchboard including:

a. Circuit breaker type, interrupting rating, and trip devices, including available settings.

b. Manufacturer's instruction manuals and published time-current curves (on full size logarithmic paper) of the main secondary breaker and largest secondary feeder device.

B. Switchboard Drawings

1. Drawings shall include, but are not limited to the following:

a. One-line diagram including breakers, current transformers, and meters

b. Outline drawings including front elevation, section views, footprint, and overall dimensions

c. Bus configuration including dimensions and ampere ratings of bus bars

d. Markings and NEMA nameplate data

e. Circuit breaker type, interrupting rating, and trip devices, including available settings

f. Three-line diagrams and elementary diagrams and wiring diagrams with terminals identified, and indicating prewired interconnections between items of equipment and the interconnection between the items.

g. Manufacturer's instruction manuals and published time-current curves (on full size logarithmic paper) of the main secondary breaker and largest secondary feeder device. These shall be used by the designer of record to provide breaker settings that will ensure protection and coordination are achieved.

C. Provide materials and equipment that are products of manufacturers regularly engaged in the production of such products which are of equal material, design and workmanship. Products shall have been in satisfactory use for a period of at least 10 consecutive years.

1.05 MAINTENANCE

A. Switchboard Operation and Maintenance Data

1. Submit Operation and Maintenance Manuals. Manuals shall be assembled and bound securely in durable, hard covered, water resistant binders. The manuals shall be assembled and indexed in the following order with a table of contents. The contents of the assembled operation and maintenance manuals shall be as follows:

a. Manufacturer's O&M information

b. Catalog data

c. Drawings

d. Prices for spare parts and supply list.

e. Design test reports

f. Production test reports

B. Spare Parts

1. Spare parts shall be boxed or packaged for long term storage and clearly identified on the exterior of the package. Identify each item with manufacturer’s name, description, and part number. All spare parts shall be of the same material and workmanship, shall meet the same requirements, and shall be interchangeable with the corresponding original parts furnished.

1.06 WARRANTY

A. The equipment items shall be supported by service organizations which are reasonably convenient to the equipment installation in order to render satisfactory service to the equipment on a regular and emergency basis during the warranty period of the contract.

PART 2 - PRODUCTS

2.01 SWITCHBOARD

A. Ratings

1. The voltage rating of the switchboard shall be as indicated. The continuous current rating of the main bus shall be as indicated. The short-circuit current rating shall be as indicated. The switchboard shall be UL listed and labeled as service entrance equipment.

2.02 CONSTRUCTION

A. General

1. Switchboard shall consist of vertical sections bolted together to form a rigid assembly and shall be front and rear aligned. All circuit breakers shall be front accessible. Rear aligned switchboards shall have front accessible load connections. Where indicated, "space for future" or "space" shall mean to include bus, device supports, and connections. Switchboard shall be completely factory engineered and assembled, including protective devices and equipment indicated with necessary interconnections, instrumentation, and control wiring.

2. Switchboard shall be by:

a. Square D

b. EATON/Cutler Hammer

c. Siemens

d. or equal

B. Enclosure

1. The switchboard enclosure shall be an indoor NEMA 1 type enclosure.

C. Bus Bars

1. Bus bars shall be copper with silver-plated contact surfaces. Plating shall be a minimum of 0.0002 inch thick. Make bus connections and joints with hardened steel bolts. The through-bus shall be rated at the full ampacity of the main

throughout the switchboard. Provide minimum one-quarter by 2 inch copper ground bus secured to each vertical section along the entire length of the switchboard. The neutral bus shall be rated 100 percent of the main bus continuous current rating. Phase bus bars shall be insulated with an epoxy finish coating powder providing a minimum breakdown voltage of 16,000 volts per ASTM D 149.

D. Main Section

1. The main sections and tie breaker section shall consist of an individually mounted power circuit breaker. Main and tie breakers shall be mounted such that the mechanical spring release pushbuttons that open or close the circuit breaker are behind a lockable door. This shall prevent unintentional breaker operation and limit access to override the electrical interlocks to qualified personnel only. Normal operation of the main breakers shall be via automatic transfer control system as detailed herein.

E. Distribution and/or Combination Sections

1. The distribution and/or combination sections shall consist of power circuit breakers for the AFD's and/or molded case circuit breakers for the branch devices as indicated.

F. Protective Devices

1. Provide main and branch protective devices as indicated.

a. Power Circuit Breaker (1000A and larger): IEEE C37.13. electrically operated stationary, low-voltage power circuit breaker with a short-circuit current rating as indicated at 480 volts. Breaker frame size shall be as indicated. Equip electrically operated breakers with motor-charged, stored-energy closing mechanism to permit rapid and safe closing of the breaker against fault currents within the short time rating of the breaker, independent of the operator's strength or effort in closing the handle.

b. Molded-Case Circuit Breaker (800A and smaller): UL 489. UL listed and labeled, 100 percent rated, stationary manually operated, low voltage molded-case circuit breaker, with a short-circuit current rating of as indicated at 480 volts. Breaker frame size shall be as indicated. Series rated circuit breakers are unacceptable.

G. Instruments

1. ANSI C39.1 for electrical indicating switchboard instruments, with 2 percent accuracy. The ac ammeters and voltmeters shall be a minimum of 2 inches square, with 250-degree scale. Provide single phase indicating instruments with flush-mounted transfer switches for reading three phases.

2. Ac Ammeters self contained.

3. Ac Voltmeters self contained.

4. Instrument Control Switches

   a. Provide rotary cam-operated type with positive means of indicating contact positions. Switches shall have silver-to-silver contacts enclosed in a protective cover which can be removed to inspect the contacts.

H. Heaters

1. Provide 120-volt heaters in each switchboard section. Heaters shall be of sufficient capacity to control moisture condensation in the section, shall be 250 watts minimum, and shall be controlled by a thermostat located in the section. Thermostat shall be industrial type, high limit, to maintain sections within the range of 60 to 90 degrees F. Supply voltage for the heaters shall be obtained from a control power transformer within the switchboard. If heater voltage is different than switchboard voltage, provide transformer rated to carry 125 percent of heater full load rating. Transformer shall have 220 degrees C insulation system with a temperature rise not exceeding 115 degrees C and shall conform to NEMA ST 20. Energize electric heaters in switchboard assemblies while the equipment is in storage or in place prior to being placed in service. Provide method for easy connection of heater to external power source. Provide temporary, reliable external power source if commercial power at rated voltage is not available on site.

I. Terminal Boards

1. Provide with engraved plastic terminal strips and screw type terminals for external wiring between components and for internal wiring between removable assemblies. Terminal boards associated with current transformers shall be short-circuiting type. Terminate conductors for current transformers with ring-tongue lugs. Terminal board identification shall be identical in similar units. External wiring shall be color coded consistently for similar terminal boards.

J. Wire Marking

1. Mark control and metering conductors at each end. Provide factory-installed, white, plastic tubing, heat stamped with black block type letters on factory-installed wiring. On field-installed wiring, provide white, preprinted, polyvinyl chloride (PVC) sleeves, heat stamped with black block type letters. Each sleeve shall contain a single letter or number, shall be elliptically shaped to securely grip the wire, and shall be keyed in such a manner to ensure alignment with adjacent sleeves. Provide specific wire markings using the appropriate combination of individual sleeves. Each wire marker shall indicate the device or equipment,

including specific terminal number to which the remote end of the wire is attached.

K. Automatic Transfer Switch (ATS) or Automatic Transfer Control (ATC)

1. Refer applicable specification section in Division 16

L. Surge Protection Device (SPD)

1. Integral Transient Voltage Surge Suppressors (SPD) shall be provided where indicated in the drawings and shall protect AC electrical circuits from the effect of lightning induced currents, substation switching transients and internally generated transients resulting from inductive and or capacitive load switching. The SPD shall conform to the following requirements.

   a. SPD shall be listed in accordance with UL 1449 Fourth Edition 2015 and UL 1283, Electromagnetic Interference Filters.

   b. SPD shall provide suppression for all modes of protection: L-N, L-G, and N-G in WYE systems.

   c. SPD ratings:
      (1) Minimum surge current rating shall be 200 kA per phase (100 kA per mode) for service entrance and 80 kA per phase (40 kA per mode) for distribution applications.
      (2) UL 1449 clamping voltage must not exceed the following:

VOLTAGE	L-N	L-G	N-G
240/120	800/400V	800/400V	400V
208Y/120	400V	400V	400V
480Y/277	800V	800V	800V
600Y/347	1200V	1200V	1200V

      (3) Pulse life test: Capable of protecting against and surviving 5000 ANSI/IEEE Category C High transients without failure or degradation of clamping voltage by more than 10%.

2. SPD shall be designed to withstand a maximum continuous operating voltage (MCOV) of not less than 115% of nominal RMS voltage.

3. SPD shall be constructed of one self-contained suppression module per phase.

4. Visible indication of proper SPD connection and operation shall be provided. The indicator lights shall indicate which phase as well as which module is fully operable. The status of each SPD module shall be monitored on the front cover of the enclosure as well as on the module. A push-to-test button shall be provided to test each phase indicator. Push-to-test button shall activate a state change of dry contacts for testing purposes.

5. SPD shall be equipped with an audible alarm which shall activate when any one of the surge current modules has reached an end-of-life condition. An alarm on/off switch shall be provided to silence the alarm. The switches and alarm shall be located on the front cover of the enclosure.

6. A connector shall be provided along with dry contacts (normally open or normally closed) to allow connection to a monitoring by the Pump Station PLC. The output of the dry contacts shall indicate an end-of-life condition for the complete SPD or an individual module.

7. Terminals shall be provided for necessary power and ground connections.

8. SPD shall have a warranty for a period of ten (10) years from date of invoice. Warranty shall be the responsibility of the electrical distribution equipment manufacturer and shall be supported by their respective field service division.

2.03 MANUFACTURER'S NAMEPLATE

A. Each item of equipment shall have a nameplate bearing the manufacturer's name, address, model number, and serial number securely affixed in a conspicuous place; the nameplate of the distributing agent will not be acceptable. This nameplate and method of attachment may be the manufacturer's standard if it contains the required information.

2.04 FIELD FABRICATED NAMEPLATES

A. ASTM D 709. Provide laminated plastic nameplates for each switchboard, equipment enclosure, relay, switch, and device; as specified in this section or as indicated on the drawings. Each nameplate inscription shall identify the function and, when applicable, the position. Nameplates shall be melamine plastic, 0.125 inch thick, white with black center core. Surface shall be matte finish. Corners shall be square. Accurately align lettering and engrave into the core. Minimum size of nameplates shall be one by 2.5 inches. Lettering shall be a minimum of 0.25 inch high normal block style.

2.05 SOURCE QUALITY CONTROL

A. Switchboard Design Tests

1. Furnish documentation showing the results of design tests on a product of the same series and rating as that provided by this specification.
   a. Short-circuit current test
   b. Enclosure tests
   c. Dielectric test

B. Switchboard Production Tests

1. Furnish reports which include results of production tests performed on the actual equipment for this project. These tests include:

a. 60-Hertz Dielectric Tests

B. Mechanical Operation Tests

C. Electrical Operation and Control Wiring Tests

D. Ground Fault Sensing Equipment Test

PART 3 - EXECUTION

3.01 INSTALLATION

A. Electrical installations shall conform to IEEE C2, NFPA 70, and to the requirements specified herein.

3.02 GROUNDING

A. NFPA 70 and IEEE C2, except that grounds and grounding systems shall have a resistance to solid earth ground not exceeding 5 ohms.

B. Grounding Electrodes

1. Provide driven ground rods. Connect ground conductors to the upper end of the ground rods by exothermic weld or compression connector. Provide compression connectors at equipment end of ground conductors.

C. Equipment Grounding

1. Provide bare copper cable not smaller than No. 3/0 AWG not less than 24 inches below grade connecting to the indicated ground rods. When work in addition to that indicated or specified is directed to obtain the specified ground resistance, the provision of the contract covering "Changes" shall apply.

D. Connections

1. Make joints in grounding conductors and loops by exothermic weld or compression connector.

E. Grounding and Bonding Equipment

1. UL 467, except as indicated or specified otherwise.

3.03 FOUNDATION FOR EQUIPMENT AND ASSEMBLIES

A. Interior Location

1. Mount switchboard on concrete slab. Unless otherwise indicated, the slab shall be at least 4 inches thick. The top of the concrete slab shall be approximately 4 inches above finished floor. Edges above floor shall have 1/2 inch chamfer. The slab shall be of adequate size to project at least 8 inches beyond the equipment. Provide conduit turnups and cable entrance space required by the equipment to be mounted. Seal voids around conduit openings in slab with water- and oil-resistant caulking or sealant. Cut off and bush conduits 3 inches above slab surface.

3.04 FIELD QUALITY CONTROL

A. Perform in accordance with the manufacturer's recommendations and include the following visual and mechanical inspections and electrical tests.

B. Switchboard Assemblies

1. Visual and Mechanical Inspection

a. Compare equipment nameplate data with specifications and approved shop drawings.

b. Inspect physical, electrical, and mechanical condition.

c. Confirm correct application of manufacturer's recommended lubricants.

d. Verify appropriate anchorage, required area clearances, and correct alignment.

e. Inspect all doors, panels, and sections for paint, dents, scratches, fit, and missing hardware.

f. Verify that circuit breaker sizes and types correspond to approved shop drawings.

g. Inspect all bolted electrical connections for high resistance using low-resistance ohmmeter, verifying tightness of accessible bolted electrical connections by calibrated torque-wrench method, or performing thermographic survey.

h. Confirm correct operation and sequencing of electrical and mechanical interlock systems.

i. Clean switchboard.

j. Inspect insulators for evidence of physical damage or contaminated surfaces.

k. Exercise all active components.

l. Inspect all mechanical indicating devices for correct operation.

m. Inspect control power transformers.

2. Electrical Tests

a. Perform insulation-resistance tests on each bus section.

b. Perform over-potential tests.

c. Perform insulation-resistance test on control wiring; Do not perform this test on wiring connected to solid-state components.

d. Perform control wiring performance test.

e. Perform primary current injection tests on the entire current circuit in each section of assembly.

f. Verify operation of switchboard heaters.

C. Circuit Breakers

1. Visual and Mechanical Inspection

a. Compare nameplate data with specifications and approved shop drawings.

b. Inspect circuit breaker for correct mounting.

c. Operate circuit breaker to ensure smooth operation.

d. Inspect case for cracks or other defects.

e. Inspect all bolted electrical connections for high resistance using low resistance ohmmeter, verifying tightness of accessible bolted connections and/or cable connections by calibrated torque-wrench method, or performing thermographic survey.

f. Inspect mechanism contacts and arc chutes in unsealed units.

2. Electrical Tests

   a. Perform contact-resistance tests.

   b. Perform insulation-resistance tests.

   c. Perform Breaker adjustments for final settings in accordance with the results of the Electrical System Analysis and Selective Coordination Study Report.

   d. Perform long-time delay time-current characteristic tests

D. Current Transformers

1. Visual and Mechanical Inspection

   a. Compare equipment nameplate data with specifications and approved shop drawings.

   b. Inspect physical and mechanical condition.

   c. Verify correct connection.

   d. Verify that adequate clearances exist between primary and secondary circuit.

   e. Inspect all bolted electrical connections for high resistance using low-resistance ohmmeter, verifying tightness of accessible bolted electrical connections by calibrated torque-wrench method, or performing thermographic survey.

   f. Verify that all required grounding and shorting connections provide good contact.

2. Electrical Tests

   a. Perform resistance measurements through all bolted connections with low-resistance ohmmeter, if applicable.

   b. Perform insulation-resistance tests.

   c. Perform polarity tests.

   d. Perform ratio-verification tests.

E. Grounding System

1. Visual and Mechanical Inspection:

a. Inspect ground system for compliance with contract plans and specifications.

2. Electrical Tests:

a. IEEE 81. Perform ground-impedance measurements utilizing the fall-of-potential method. On systems consisting of interconnected ground rods, perform tests after interconnections are complete. On systems consisting of a single ground rod perform tests before any wire is connected. Take measurements in normally dry weather, not less than 48 hours after rainfall. Use a portable ground testing megger in accordance with manufacturer's instructions to test each ground or group of grounds. The instrument shall be equipped with a meter reading directly in ohms or fractions thereof to indicate the ground value of the ground rod or grounding systems under test.

b. Submit the measured ground resistance of each ground rod and grounding system, indicating the location of the rod and grounding system. Include the test method and test setup (i.e., pin location) used to determine ground resistance and soil conditions at the time the measurements were made.

F. ATS or ATC Operational Tests

1. Functional Test:

a. Conduct on each controller.

b. Inspect ATC for electrical supply termination connections, interconnections, proper installation, and operation.

c. Test for system operation with main breakers and generator(s) in every possible scenario of breaker position, generator and utility source availability and operation all duty pumps, if LBGC is provided, to assure that they system will not encounter a situational malfunction.

d. Record test data for report.

2. Performance Test:

a. Conduct on entire installed system, including main switchgear, engine generators and pumps.

b. Perform under actual or approved simulated operating conditions.

c. Demonstrate proper transfer of load from Utility source to engine generator source with the simulation of Utility power loss, including all associated sequence timers.

d. Demonstrate proper transfer of load back from engine generator source to Utility source, including all associated sequence and cool-down timers.

e. Demonstrate performance of the LBGC by manually operating combinations of pumps, as input conditions and wet well level allows, to verify the appropriate number of generators operate.

f. Record test data for report.

G. Upon completion of acceptance checks, settings, and tests, the Contractor shall show by demonstration in service that circuits and devices are in good operating condition and properly performing the intended function. Circuit breakers shall be tripped by operation of each protective device. Test shall require each item to perform its function not less than three times. As an exception to requirements stated elsewhere in the contract, the Project Engineer shall be given 5 working days advance notice of the dates and times for checks, settings, and tests.

END OF SECTION

SECTION 16496R

AUTOMATIC TRANSFER SWITCH (PS 513)

PART 1 – GENERAL

1.01 SCOPE

A. Low voltage Automatic Transfer Switches having the ratings, features/accessories and enclosures as specified herein and as shown on the contract drawings. Automatic Transfer Switches shall be integrated into the Main Switchboards as shown on the contract drawings.

1.02 RELATED SECTIONS

1.03 REFERENCES

A. The automatic transfer switches and all components shall be designed, manufactured and tested in accordance with the latest applicable standards of UL and NEMA as follows:

1. UL 1008 – Transfer Switches
2. UL 991 - Tests for Safety-Related Controls Employing Solid-State Devices
3. NFPA 70 – National Electrical Code
4. NFPA 99 – Essential Electrical Systems of Health Care Facilities
5. NFPA 110 – Emergency and Standby Power Systems
6. NEMA ICS 10 – AC Transfer Switch Equipment
7. IEEE 446 – Recommended Practice for Emergency and Standby Power Systems

1.04 SUBMITTALS – FOR REVIEW/APPROVAL

A. The following information shall be submitted to the Engineer:

1. Front view and plan view of the assembly.
2. Schematic diagram.
3. Conduit space locations within the assembly.
4. Assembly ratings including:
   a. Withstand and Closing rating.
   b. Voltage.

c. Continuous current rating.

d. Short-time rating if applicable.

e. Short-circuit rating if ordered with integral protection.

5. Cable terminal sizes.

6. Product Data Sheets.

1.05 SUBMITTALS – FOR CONSTRUCTION

A. The following information shall be submitted for record purposes:

1. Final as-built drawings and information for items listed in Section 1.04.

2. Wiring diagrams.

3. Certified production test reports.

4. Installation information.

5. Seismic certification.

B. The final (as-built) drawings shall include the same drawings as the construction drawings and shall incorporate all changes made during the manufacturing process.

1.06 QUALIFICATIONS

A. The manufacturer of the assembly shall be the manufacturer of the major components within the assembly.

B. For the equipment specified herein, the manufacturer shall be ISO 9001 or 9002 certified.

C. The manufacturer of this equipment shall have produced similar electrical equipment for a minimum period of five (5) years. When requested by the Engineer, an acceptable list of installations with similar equipment shall be provided demonstrating compliance with this requirement.

1.07 REGULATORY REQUIREMENTS

A. Provide a certificate of compliance with UL 1008 for the transfer switches furnished under this section.

1.08 OPERATION AND MAINTENANCE MANUALS

A. Equipment operation and maintenance manuals shall be provided with each assembly shipped, and shall include instruction leaflets and instruction bulletins for the complete assembly and each major component.

PART 2 – PRODUCTS

2.01 MANUFACTURERS

A. Eaton

B. Square D

C. GE

D. The listing of specific manufacturers above does not imply acceptance of their products that do not meet the specified ratings, features and functions. Manufacturers listed above are not relieved from meeting these specifications in their entirety. Products in full compliance with the specification and manufactured by others not named will be considered.

2.02 MECHANICALLY HELD TRANSFER SWITCH

A. The transfer switch unit shall be electrically operated and mechanically held. The electrical operator shall be a solenoid mechanism, momentarily energized. The transfer switch unit shall include both electrical and mechanical interlocks to prevent both sets of main contacts from being closed at the same time. Main operators which include overcurrent disconnect devices OR do not include electrical and mechanical interlocks will not be accepted.

B. All transfer switch sizes shall use only one type of main operator for ease of maintenance and commonality of parts.

C. The switch shall be positively locked and unaffected by momentary outages, so that contact pressure is maintained at a constant value and contact temperature rise is minimized for maximum reliability and operating life.

D. All main contacts shall be silver composition. Switches rated 800 amperes and above shall have segmented, blow-on construction for high withstand and close-on capability and be protected by separate arcing contacts.

E. Inspection of all contacts shall be possible from the front of the switch without disassembly of operating linkages and without disconnection of power conductors. Switches rated 800 amps and higher shall have front removable and replaceable contacts. All stationary and moveable contacts shall be replaceable without removing power conductors and/or bus bars.

F. Designs utilizing components of molded-case circuit breakers, contactors, or parts thereof, which are not intended for continuous duty, repetitive switching or transfer between two active power sources are not acceptable.

G. Where neutral conductors are to be solidly connected as shown on the plans, a neutral conductor plate with fully rated AL-CU pressure connectors shall be provided.

H. All standard door mounted switches and indicating lights described in Section 3 shall be integrated into flush – mounted, interface membrane or equivalent in the enclosure door for easy viewing % replacement. The panel shall include a manual locking feature to allow the user to lockout all membrane mounted control switches to prevent unauthorized tampering. The membrane panel shall be suitable for mounting by others when furnished on open type units.

2.03 MICROPROCESSOR CONTROLLER

A. The controller's sensing and logic shall be provided by a single built-in microprocessor for maximum reliability, minimum maintenance, and the ability to communicate serially through an optional serial communication module or Ethernet connectivity module.

B. A single controller shall provide twelve selectable nominal voltages for maximum application flexibility and minimal spare part requirements. Voltage sensing shall be true RMS type and shall be accurate to ± 1% of nominal voltage. Frequency sensing shall be accurate to ± 0.2%. The panel shall be capable of operating over a temperature range of -20 to +60 degrees C and storage from -55 to +85 degrees C.

C. The controller shall be connected to the transfer switch by an interconnecting wiring harness. The harness shall include a keyed disconnect plug to enable the controller to be disconnected from the transfer switch for routine maintenance. Sensing and control logic shall be provided on multi-layer printed circuit boards. Interfacing relays shall be industrial grade plug-in type with dust covers. The panel shall be enclosed with a protective cover and be mounted separately from the transfer switch unit for safety and ease of maintenance. The protective cover shall include a built-in pocket for storage of operator's manuals.

D. The controller shall meet or exceed the requirements for Electromagnetic Compatibility (EMC) as follows:

1.	EN 55011:1991	Emission standard – Group 1, Class A
2.	EN 50082-2:1995	Generic immunity standard, from which:
	EN 61000-4-2:1995	Electrostatic discharge (ESD) immunity
	ENV 50140:1993	Radiated Electro-Magnetic field immunity
	EN 61000-4-4:1995	Electrical fast transient (EFT) immunity
	EN 61000-4-5:1995	Surge transient immunity
	EN 61000-4-6:1996	Conducted Radio-Frequency field immunity

3. IEEE 472 (ANSI C37.90A) Ring Wave Test.

2.04 CONTROLLER DISPLAY AND KEYPAD

A. An LCD display and keypad shall be an integral part of the controller for viewing all available data and setting desired operational parameters. Operational parameters shall also be available for viewing and limited control through the communications interface port. The following parameters shall only be adjustable via DIP switches on the controller.

1. Nominal line voltage and frequency
2. Single or three phase sensing
3. Operating parameter protection
4. Transfer operating mode configuration

(Open transition, Closed transition, or Delayed transition)

All instructions and controller settings shall be easily accessible, readable and accomplished without the use of codes, calculations, or instruction manuals.

B. Controller shall be capable of simultaneously displaying availability of each source and position of transfer switch.

2.05 VOLTAGE AND FREQUENCY SENSING

A. The controller shall have a voltage range of 0-790 volts (50/60 Hz) and an accuracy of +/- 1% of the reading and a frequency range of 40-70 Hz and an accuracy of +/- .3 Hz.

B. Voltage and frequency dropout and pickup parameters are set as a percentage of the nominal voltage as indicated in the table below.

Setpoint	Sources	Dropout	Pickup
Undervoltage	Source1 and 2	70 – 97%	(DO + 2%) - 99%
Overvoltage	Source 1 and 2	105 – 110%	103% - (DO – 2%)
Underfrequency	Source 1 and 2	90 – 97%	(DO + 1Hz) – 99%
Overfrequency	Source 1 and 2	103 – 105%	101% - (DO – 1Hz)
Voltage Unbalance	Source 1 and 2	5 – 20%	(UNBAL DO% - 2) – 3%

C. The normal and emergency sources shall include phase reversal protection. The preferred rotation is programmable as ABC or CBA.

2.06 TIME DELAYS

A. A time delay shall be provided on transfer to source 2, adjustable from 0 to 60 minutes.

B. A time delay shall be provided to override a momentary power outage or voltage fluctuation, adjustable from 0 to 120 seconds.

C. A time delay shall be provided on retransfer from source 2 to source 1, adjustable from 0 to 60 minutes.

D. A time delay shall be provided after retransfer that allows the generator to run unloaded prior to shutdown, adjustable form 0 to 60 minutes.

E. A time delay shall be provided for engine failure to start, adjustable 0- 60 seconds.

F. All delays shall be field adjustable from the microprocessor-based controller without the use of special tools.

2.07 ADDITIONAL FEATURES

A. The ATS shall include the ability to program the ATS to generate weekly generator exercise test. The generator exercise shall output a Form C contact connecting to the generator for single generator sites or the contact shall go to the PLC which will then start/run both generators as requested by the ATS.

B. Upon utility power failure, the ATS shall supply one Form C contact to be used by the generator for a single generator site or for multi-generator sites to the PLC to ”start/run” the generators. The contacts shall be rated for 5-Amp at 250-Vac and 5-Amp at 30-Vdc This contact shall be wired to the PLC for the PLC to do the Load Based Generator Control (LBGC)

C. The ATS shall include two independently programmable Engine Exercisers, selectable as disabled, 7, 14, or 28 day interval, or by calendar date. Run time shall be adjustable for 0-600 minutes, with or without load. Upon loss of Source 2 power, the ATS shall automatically return to Source 1. Transfer time delays shall also be independently programmable for test events. The Exercisers shall have a dry contact to be used to start the generators directly if single generator site or for multi-generator sites through the PLC.

D. The controller shall include a keypad pushbutton to initiate a system test.

E. One Form C auxiliary contact to indicate Source 1 position and one Form C contact to indicate source 2 position. The contacts shall be rated for 10-Amp, 1/3-Horsepower at 250-Vac and 10-Amp at 30-Vdc.

F. One Form C contact for Source 1 Available. The contacts shall be rated for 10-Amp, 1/3-Horsepower at 250-Vac and 10-Amp at 30-Vdc.

G. One Form C contact for Source 2 Available. The contacts shall be rated for 10-Amp, 1/3-Horsepower at 250-Vac and 10-Amp at 30-Vdc.

H. One Form C contact for the ATS to request/exercise the generator based on a programmable schedule inside of the ATS.

I. One Form C contact for the ATS in automatic mode. The contacts shall be rated for 10-Amp, 1/3-Horsepower at 250-Vac and 10-Amp at 30-Vdc.

J. An Inphase monitor shall be provided in the controller. The monitor shall control transfer so that motor load inrush currents do not exceed normal starting currents, and shall not require external control of power sources. The inphase monitor shall be specifically designed for and be the product of the DTTS manufacturer.

K. **Engine Exerciser** – The controller shall provide an internal engine exerciser. The engine exercise shall allow the user to program up to seven different exercise routines. For each routine, the user shall be able to:

1. Enable or disable the routine.
2. Enable or disable transfer of the load during routine.
3. Set the start time
   -time of day
   -day of week
   -week of month (1st, 2nd, 3rd, 4th, alternate or every)
4. Set the duration of the run.

At the end of the specified duration the switch shall transfer the load back to normal and run the generator for the specified cool down period. A 10-year life battery that supplies power to the real time clock in the event of a power loss will maintain all time and date information

PART 3 - ADDITIONAL REQUIREMENTS

3.01 WITHSTAND AND CLOSING RATINGS

A. The DTTS shall be rated to close on and withstand the available RMS symmetrical short circuit current at the DTTS terminals with the type of overcurrent protection shown on the plans.

B. The DTTS shall be UL listed in accordance with UL 1008 and be labeled in accordance with that standard's 1 ½ and 3 cycle, long-time ratings. DTTSs which are not tested and labeled with 1 ½ and 3 cycle (any breaker) ratings and have series, or specific breaker only, are not acceptable.

PART 4 - EXECUTION

4.01 EXAMINATION

4.02 FACTORY TESTING

A. The following standard factory tests shall be performed on the equipment provided under this section. All tests shall be in accordance with the latest version of UL and NEMA standards.

1. Insulation check ensure the integrity of insulation and continuity of the entire system.

2. Visual inspection to ensure that the switch matches the specification requirements and to verify that the fit and finish meet quality standards.

3. Mechanical tests to verify that the switch's power sections are free of mechanical hindrances.

4. Electrical tests to verify the complete electrical operation of the switch and to set up time delays and voltage sensing settings of the logic.

B. The manufacturer shall provide a certified copy of factory test reports.

C. Transfer switch shall include a label indicating order number, catalog number and date.

END OF SECTION

SECTION 16497

AUTOMATIC TRANSFER CONTROL SYSTEM (PS 43)

PART 1 GENERAL

1.01 REFERENCES

A. The following is a list of standards that may be referenced in this section:

1. Institute of Electrical and Electronics Engineers (IEEE):
   a. C37.90.1, Standard for Surge Withstand Capability (SWC) Tests for Relays and Relay Systems Associated with Electric Power Apparatus.
   b. C37.90.2, Standard for Withstand Capability of Relay Systems to radiated Electromagnetic Interference from Transceivers.
2. National Electrical Manufacturers Association (NEMA):
   a. ICS 1, General Standards for Industrial Control and Systems: General Requirements.
   b. ICS 2, Industrial Control and Systems Controllers, Contactors, and Overload Relays not more than 2000 volts ac or 750 volts ac.
   c. ICS 6, Industrial Control and Systems: Enclosures 250, Enclosures for Electrical Equipment (1,000 Volts Maximum).
3. National Fire Protection Association (NFPA): 70, National Electrical Code (NEC).
4. Underwriters Laboratories, Inc. (UL): 1008, Transfer Switch Equipment.

1.02 SUBMITTALS

A. Action Submittals:

1. Descriptive product information.
2. Dimensional drawings.
3. Control diagrams.
4. Equipment ratings.

B. Informational Submittals:

1. Factory test reports.
2. Operation and Maintenance Data: Complete operations and maintenance information for components provided.
3. Manufacturer’s Certificate of Proper Installation.

1.03 QUALITY ASSURANCE

A. Authority Having Jurisdiction (AHJ):

1. Provide the Work in accordance with NFPA 70, National Electrical Code (NEC). Where required by the AHJ, material and equipment shall be labeled or

listed by a nationally recognized testing laboratory or other organization acceptable to the AHJ in order to provide a basis for approval under NEC.

2. Materials and equipment manufactured within the scope of standards published by Underwriters Laboratories, Inc. shall conform to those standards and shall have an applied UL listing mark.

PART 2 PRODUCTS

2.01 MANUFACTURERS

A. Materials, equipment, and accessories specified in this section shall be products of:

1. G&W Electric Company Model ATC 451.
2. GE Model MX250.

2.02 GENERAL

A. Provide a microprocessor based automatic transfer control system to monitor utility power, systematically monitor and control switchgear utility and generator main breakers, and interface with PLC load based control of standby generators to ensure electric power to the switchgear according to the requirements specified. The automatic transfer control system shall be the standard product of the manufacturer.

B. The automatic transfer control system shall interface with power operated breakers provided as part of the facility's main switchgear specified under a separate specification section. Provide all needed components to interface the automatic transfer control system with breakers for OPEN and CLOSE control and respective position monitoring.

C. In accordance with applicable standards of NFPA 70, NEMA ICS 1, NEMA ICS 2, NEMA ICS 6, IEEE C37.90.1, IEEE C37.90.2, and UL 1008.

D. Operating Conditions:

1. Ambient Temperature: Maximum 50 degrees C.
2. Equipment to be fully rated without any derating for specified operating conditions.

2.03 ENCLOSURE

A. Type: Nonventilated NEMA 250, Type 12 when mounted in dedicated enclosure.

B. Dead front, front accessible wall mounted cabinet with 14-gauge welded stainless steel construction.

C. Continuously hinged single door, with handle and lock cylinder.

D. Finish: Baked enamel applied over rust-inhibiting, phosphated base coating.

1. Interior Panel Components' Color: Provide gray finish as approved by Owner.
2. Unpainted Metal Parts: Plated for corrosion resistance.

E. Optional Enclosure Type: Open for mounting in transfer control cubical in switchgear. Contractor has option to install automatic transfer control system in switchgear line-up.

2.04 CONTROL MODULE

A. Completely enclosed and mounted within or separately from switchgear.

B. Microprocessor for sensing and logic control with inherent digital communications capability.

C. Plug-in, industrial grade interfacing relays with dust covers.

D. Connected to switchgear main breakers by wiring harness having keyed disconnect plug.

E. Plug-in printed circuit boards for sensing and control logic.

F. Adjustable solid state undervoltage sensors for all three phases of normal and for one phase of standby generator source:

1. Pickup: 85 to 100 percent nominal.
2. Dropout: 75 to 98 percent of pickup setting.

G. Adjustable frequency sensors for standby generator source:

1. Pickup: 90 to 100 percent nominal.
2. Dropout: 87 to 89 percent of pickup setting.

H. Control module with adjustable time delays:

1. 0.5 to 6-second engine start delay.
2. 0 to 5-minute load transfer to standby generator delay.
3. 0 to 30-minute retransfer to normal delay.
4. 0 to 30-minute unload running time delay.
5. Switch to bypass above time delays during testing.

I. Form-C start contacts, rated 10 amperes, 32-volt dc, for two-wire engine control, wired to terminal block.

J. Exerciser, adjustable in 15-minute increments, 7-day dial clock to automatically exercise generator complete with door mounted NO LOAD and LOAD selector switch.

K. Adjustable 0 to 5 minutes time delay relay for engine starting signal.

2.05 INDICATORS

A. Type: Manufacturer's standard.

B. Green lens to indicate switchgear position for normal power source.

C. Red lens to indicate switch position for standby generator power source.

D. White lens to indicate normal power source is available within parameters established by pickup and dropout settings.

E. Amber lens to indicate standby generator power source is available within parameters established by pickup and dropout settings.

F. Provide one normally open and one normally closed, 5 amperes, 120-volt contact for remote indication when automatic transfer control system is in each source position.

G. Provide one normally open, 5 ampere, 120-volt contact for indication that ATCS is "Exercising" so PLC can bypass Load Based Generator Control.

H. Provide one normally open, 5 ampere, 120-volt contact for indication that ATCS is in "Auto".

2.06 GENERATOR PARALLELING EQUIPMENT

A. When multiple generators are required at a given Site, provide the following components for each Owner-provided generator that will allow multiple generators to be paralleled to a common bus:

1. Baldor, IntelliGen Controller.
2. Baldor, Generator Paralleling Dongle.
3. Baldor, IG Transformer.
4. Baldor, IG AVR1.
5. Baldor, Motorized Circuit Breaker.

2.07 FACTORY TESTS

A. Test to ensure correct:

1. Operation of individual components.
2. Sequence of operation.
3. Transfer time, voltage, frequency, and time delay settings.

PART 3 EXECUTION

3.01 INSTALLATION

A. Install in accordance with manufacturer's instructions.

B. Secure enclosure to structural steel channels attached to wall surface.

3.02 FIELD QUALITY CONTROL

A. Functional Test:
   1. Conduct on each controller.
   2. Inspect ATCS for electrical supply termination connections, interconnections, proper installation, and operation.
   3. Test for system operation with main breakers and generator(s) in every possible scenario of breaker position, generator and utility source availability and operation of all duty pumps.
   4. Record test data for report.

B. Performance Test:
   1. Conduct on entire installed system, including main switchgear, engine generators and pumps.
   2. Perform under actual or approved simulated operating conditions.
   3. Demonstrate proper transfer of load from Utility source to engine generator source with the simulation of Utility power loss, including all associated sequence timers.
   4. Demonstrate proper transfer of load back from engine generator source to Utility source, including all associated sequence and cool-down timers.
   5. Record test data for report.

3.03 MANUFACTURERS' SERVICES

A. Manufacturer's Representative: Present at Site or classroom designated by Owner, for minimum person-days listed below, travel time excluded:

   1. Two (2) person-days for installation assistance and inspection.
   2. Three (3) person-days for functional and performance testing and completion of Manufacturer's Certificate of Proper Installation.
   3. One (1) person-days for functional demonstration to be witnessed by Owner and Site training of proper operation.

END OF SECTION

INDEX TO SHEETS

SHEET NO.	DESCRIPTION
GENERAL	
G-01	TITLE SHEET AND LOCATION MAPS
G-02	INDEX TO DRAWINGS AND GENERAL NOTES
G-03 THRU G-04	ABBREVIATIONS
G-05	CIVIL & YARD PIPING LEGEND & NOTES
G-06	MECHANICAL LEGEND AND NOTES
G-07	STRUCTURAL NOTES
G-08 THRU G-11	ELECTRICAL LEGEND AND ABBREVIATIONS
G-12 THRU G-13	ELECTRICAL DETAILS
G-14 THRU G-15	I & C LEGEND AND ABBREVIATIONS

PUMP STATION 43

SHEET NO.	DESCRIPTION
43-C01	EXISTING SITE FEATURES AND TOPOGRAPHY
43-C02	SITE PLAN
43-C03	JOINT LAYOUT
43-C04	DEMOLITION PLAN
43-C05	PROPOSED SUBMERSIBLE PUMP INSTALLATION
43-C06	NEW PUMP FOUNDATION PEDESTAL
43-S01 THRU 43-S02	STRUCTURAL DRAWINGS
43-OC01 THRU 43-OC04	O.C. DRAWINGS
43-A01 THRU 43-A02	ARCHITECTURAL DRAWINGS
43-E01 THRU 43-E14	ELECTRICAL DRAWINGS
43-I01 THRU 43-I11	INSTRUMENTATION DRAWINGS

PUMP STATION 105

SHEET NO.	DESCRIPTION
105-C01	EXISTING SITE FEATURES AND TOPOGRAPHY
105-C02	PROPOSED SITE PLAN IMPROVEMENTS
105-C03	SITE PLAN
105-C04	STANDARD PLAN 805-02, CONCRETE DUPLEX STATION DETAILS
105-C05	DEMOLITION PLAN
105-S01 THRU 105-S02	WET WELL STRUCTURAL DETAILS
105-S03	GENERATOR AND CONTROL PANEL SLABS AND DETAILS
105-E01	ELECTRICAL SITE PLAN

PUMP STATION 124

SHEET NO.	DESCRIPTION
124-C01	EXISTING SITE FEATURES AND TOPOGRAPHY
124-C02	PROPOSED SITE PLAN IMPROVEMENTS
124-C03	SITEPLAN
124-C04	STANDARD PLAN 805-03, CONCRETE TRIPLEX STATION DETAILS
124-C05	DEMOLITION PLAN
124-S01 THRU 124-S02	WET WELL STRUCTURAL DETAILS
124-S03	GENERATOR AND CONTROL PANEL SLABS AND DETAILS
124-E01	ELECTRICAL SITE PLAN STANDARD PLAN

PUMP STATION 513

SHEET NO.	DESCRIPTION
513-C01	EXISTING SITE FEATURES AND TOPOGRAPHY
513-C02	PROPOSED SITE PLAN IMPROVEMENTS
513-C03	EXISTING BOOSTER P.S. 513 YARD PIPING LAYOUT
513-C04	SITE PLAN
513-C05	STANDARD PLAN 805-03, CONCRETE TRIPLEX STATION DETAILS
513-C06	DEMOLITION PLAN
513-S01 THRU 513-S04	STRUCTURAL DRAWINGS
513-A01 THRU 513-A06	ARCHITECTURAL DRAWINGS
513-A07	BUILDING / ROOF FRAMING
513-E01 THRU 513-E03	ELECTRICAL DRAWINGS

STANDARD PLANS

SHEET NO.	STANDARD PLAN
201-203	702-99 FRAMES, GRATES AND COVERS FOR INLETS AND MANHOLES (3 SHEETS)
204	801-01 BEDDING AND BACKFILL DETAILS FOR SANITARY SEWER PIPE AND SERVICE LINES
205-206	802-01 SEWER PIPE AND CLEANOUT DETAILS (2 SHEETS)
207-209	803-01 SANITARY SEWER MANHOLES (3 SHEETS)
210-211	804-01 FORCE MAIN DETAILS (2 SHEETS)
212	805-02 CONCRETE DUPLEX STATION DETAILS (TYPE 1 STATION)
213	805-03 CONCRETE TRIPLEX STATION DETAILS (TYPE 1 OR TYPE 11 STATION)
214-215	805-04 MISC. PUMP STATION DETAILS (2 SHEETS)
216	805-05 MISC. ELECTRICAL DETAILS
217	805-06 VFD CONTROL WIRING DIAGRAM
218-219	805-07 PEDESTAL MOUNT CONTROL PANEL DETAILS (TYPE I) (2 SHEETS)
220	805-08 POWER DISTRIBUTION AND PUMP CONTROL DIAGRAM (TYPE I)
221	805-09 THREE LINE POWER DIAGRAM (TYPE I)
222	805-10 PLC POWER DISTRIBUTION DIAGRAM (TYPE I)
223-224	805-11 PLC SLOT DETAIL (TYPE I) (2 SHEETS)
225	805-17 PLC SLOT 3 DETAIL (TYPE I)
226	902-03 CHAIN LINK SECURITY FENCE
227	902-04 RESIDENTIAL WOODEN FENCE
228-238	903-01 STORM WATER POLLUTION PREVENTION PLAN BEST MANAGEMENT PRACTICES (11 SHEETS)
239-240	903-02 TEMPORARY EROSION CONTROL INSTALLATION DETAILS (2 SHEETS)
241	904-01 PLANTING DETAILS
242-244	905-01 TEMPORARY TRAFFIC CONTROL (3 SHEETS)
245	905-02 TEMPORARY TRAFFIC CONTROL APPLICATIONS
246	905-03 TEMPORARY TRAFFIC CONTROL APPLICATIONS
1 247-249	502-01 CONCRETE PAVEMENT DETAILS (3 SHEETS)
1 250-252	907-03 COMMERCIAL CRIVE DETAILS (3 SHEETS)

GENERAL SITE NOTES:

1. SOURCE OF TOPOGRAPHY SHOWN ON THE CIVIL PLANS ARE BASE MAPS PROVIDED BY GOTECH & ASSOCIATES. ADDITIONAL FEATURES MAY HAVE ALSO BEEN ADDED FROM AS-BUILT PLANS OR RECORDS. THEREFORE ACTUAL EXISTING CONDITIONS MAY VARY FROM THOSE SHOWN ON THESE PLANS. THE CONTRACTOR SHALL VERIFY ACTUAL EXISTING CONDITIONS AND ADJUST WORK PLAN ACCORDINGLY PRIOR TO BEGINNING CONSTRUCTION.
2. EXISTING TOPOGRAPHY, STRUCTURES, AND SITE FEATURES ARE SHOWN SCREENED AND/OR LIGHT-LINED. NEW FINISH GRADE, STRUCTURES, AND SITE FEATURES ARE SHOWN HEAVY-LINED.
3. HORIZONTAL DATUM: NAD 1983.
4. VERTICAL DATUM: NAVD 1988.
5. MAINTAIN, RELOCATE, OR REPLACE EXISTING SURVEY MONUMENTS, CONTROL POINTS, AND STAKES WHICH ARE DISTURBED OR DESTROYED. PERFORM THE WORK TO PRODUCE THE SAME LEVEL OF ACCURACY AS THE ORIGINAL MONUMENT(S) IN A TIMELY MANNER, AND AT THE CONTRACTOR'S EXPENSE.
6. FOR LOCATION OF CONTROL POINT AND BENCH MARK, SEE SITE PLANS.
7. COORDINATES AND DIMENSIONS SHOWN FOR PAVING IMPROVEMENTS ARE TO BACK OF CURB OR EDGE OF PAVEMENT.
8. IF SHOWN STAGING AREA SHALL BE FOR CONTRACTOR'S EMPLOYEE PARKING, CONTRACTOR'S TRAILERS AND ON-SITE STORAGE OF MATERIALS.
9. PROVIDE TEMPORARY FENCING AS NECESSARY TO MAINTAIN SECURITY AT ALL TIMES.
10. ELEVATIONS GIVEN ARE TO FINISH GRADE UNLESS OTHERWISE SHOWN.
11. SLOPE UNIFORMLY BETWEEN CONTOURS AND SPOT ELEVATIONS SHOWN.
12. UNLESS SHOWN ON THE LANDSCAPING PLANS, ALL DISTURBED AREAS NOT RECEIVING A HARD SURFACE SHALL BE COVERED WITH GRASS.
13. CONTRACTOR SHALL BE RESPONSIBLE FOR IMPLEMENTING AND MAINTAINING EROSION CONTROL DEVICES DURING CONSTRUCTION.
14. CONTRACTOR SHALL TAKE ALL OTHER MEASURES TO POSITIVELY PRECLUDE EROSION MATERIALS FROM LEAVING THE SITE. CONTRACTOR TO SUBMIT EROSION CONTROL PLAN.
15. THE LOCATION OF ALL PIPES, DUCTS OR UNDERGROUND STRUCTURES IS NOT WARRANTED TO BE EXACT, NOR IS IT WARRANTED THAT ALL UNDERGROUND PIPES, DUCTS OR STRUCTURES ARE SHOWN. CONTRACTOR SHALL CONTACT LOUISIANA ONE CALL OR THE APPROPRIATE UTILITY COMPANY FOR LOCATION OF THEIR UNDERGROUND SERVICE A MINIMUM OF 48 HOURS PRIOR TO BEGINNING CONSTRUCTION IN EACH AREA. LOUISIANA ONE CALL NUMBER IS 1-800-272-3020.
16. SOIL BORINGS AND GEOTECHNICAL SURVEY PROVIDED BY ARDAMAN AND ASSOCIATES, INC.
17. ANY REQUIRED CHANGES TO THE STRUCTURAL DRAWINGS RESULTING FROM THE ACCEPTANCE OF ALTERNATES AND/OR SUBSTITUTIONS ARE THE RESPONSIBILITY OF THE CONTRACTOR AND SHALL BE SUBMITTED TO THE ENGINEER FOR APPROVAL.
18. EXISTING UTILITIES ARE SHOWN IN APPROXIMATE LOCATIONS AND THE CONTRACTOR SHALL LOCATE THEM IN THE FIELD AT NO ADDITIONAL COST.
19. EQUIPMENT SIZE, STRUCTURAL ELEMENTS AND PIPE OPENINGS HAVE BEEN ESTABLISHED FOR CERTAIN MANUFACTURERS DIMENSIONS AND MAY NEED TO BE MODIFIED BY OTHER MANUFACTURER'S REQUIREMENTS. ALL ASSOCIATED COSTS INCURRED DUE TO MODIFICATIONS FOR RE-DESIGN/INSTALLATION SHALL BE BORNE BY CONTRACTOR.
20. AREAS WHERE PIPE JOINT DEFLECTION IS SHOWN ON THE DRAWINGS SHALL BE LIMITED TO A MAXIMUM OF 75% OF THE MANUFACTURER'S RECOMMENDED MAXIMUM JOINT DEFLECTION. RADII ARE BASED ON THE VALUES RECOMMENDED FOR MECHANICAL JOINT DUCTILE IRON PIPE. IF OTHER PIPE MATERIALS OR JOINT TYPES ARE USED, APPROPRIATE ADJUSTMENTS SHALL BE MADE TO RADII OF CURVATURE.
21. ALL DRAIN PIPES AND APPURTENANCES SHALL NOT BE REMOVED AND REPLACED UNLESS AS SHOWN ON THE PLANS OR AS AUTHORIZED BY THE ENGINEER.
22. THE CONTRACTOR SHALL BE RESPONSIBLE FOR DETERMINING THE EXACT LOCATION, DEPTH AND SIZE OF ALL UNDERGROUND UTILITIES AND STRUCTURES AND SHALL BE LIABLE FOR ANY DAMAGE CAUSED BY FAILURE TO COMPLY WITH THESE INSTRUCTIONS.
23. CONTRACTOR SHALL NOT STORE ANY MATERIAL, EQUIPMENT OR PARK ANY VEHICLES WITHIN ANY STREET RIGHT-OF-WAY.
24. A GEOTECHNICAL INVESTIGATION AND REPORT, WHICH INCLUDES RECOMMENDATIONS, WERE DEVELOPED FOR THE PUMP STATION AND RELATED STRUCTURES FOR THIS PROJECT BY ARDAMAN & ASSOCIATED, INC. THE GEOTECHNICAL INVESTIGATION AND REPORT IS CONSIDERED PART OF THE DESIGN DOCUMENTS WHERE APPLICABLE. THE DESIGN DOCUMENT DRAWINGS AND SPECIFICATIONS INCLUDES SPECIFIC REQUIREMENTS WHICH ARE BASED ON THE GEOTECHNICAL REPORT AND ITS RECOMMENDATIONS. THE CONTRACTOR IS SPECIFICALLY DIRECTED TO FOLLOW THE INSTRUCTIONS ON THE DESIGN DOCUMENT DRAWINGS AND SPECIFICATIONS FOR ALL CLEARING, GRUBBING, EXCAVATIONS, BACKFILL, FOUNDATION PREPARATION INCLUDING BASE MATERIALS FOR THE ROADWAYS AND STRUCTURES, AND FOR ALL OTHER SITE AND STRUCTURAL WORK. SHOULD THE DESIGN DOCUMENTS NOT ADDRESS A SPECIFIC ISSUE, THEN THE GEOTECHNICAL REPORT RECOMMENDATIONS SHALL BE FOLLOWED BY THE CONTRACTOR. IN THE EVENT OF CONFLICT, THE MORE STRINGENT REQUIREMENTS OF THE DESIGN DOCUMENT DRAWINGS AND SPECIFICATIONS; THE GEOTECHNICAL REPORT RECOMMENDATIONS; OR THE CITY OF BATON ROUGE STANDARD DRAWINGS AND SPECIFICATIONS SHALL GOVERN.

STATE OF LOUISIANA
JEROME M. KLIER
Reg. No. 11591
REGISTERED PROFESSIONAL ENGINEER IN CIVIL ENGINEERING
4-13-2016

SHT. G-02R

PARISH: EAST BATON ROUGE
CITY: BATON ROUGE
PROJECT: 11-PS-MS-0035

DESIGNED: J. KLIER
CHECKED: J. RICHARDSON
DETAILED: D. ROSHTO
CHECKED: J. KLIER
DATE: MARCH 2016
SHEET

NO.	DATE	REVISION DESCRIPTION	BY
1	6/24/16	STD. PLAN ADDED PER ADDENDUM NO. 3	J.M.K.

MULTIPLE PUMP STATIONS HIGHWAY 61 – PLANK ROAD (AREA NFW-C-0009)

INDEX TO DRAWINGS AND GENERAL NOTES

GEC Gulf Engineers & Consultants

ABBREVIATIONS

RRUB	RADIAL RUBBER
RS	RIGID STEEL
RST	REINFORCING STEEL
RT	RIGHT
RTN	RETURN
RTO	REGENERATIVE THERMAL OXIDIZER
RUB	RUBBER
RUBC	RUBBER CUSHIONED FLOORING
RUBS	RUBBER ESD CONTROL FLOORING
R/W	RIGHT OF WAY
S	I–BEAM
S	SLOPE, SOUTH, SWITCH
SA	SUPPLY AIR
SATC	SUSPENDED ACCUSTICAL TILE CEILING
SB	SEDIMENT BASIN
SC	SHOWER CURTAIN, SOLID CORE WOOD
SCADA	SUPERVISORY CONTROL AND DATA ACQUISITION
SCC	SOLID CORE
SCFM	STANDARD CUBIC FEED PER MINUTE
SCHED	SCHEDULE
SCU	SPEED CONTROL UNIT
SDP	SUB–DISTRIBUTION PANEL
SDWK	SIDEWALK
SEC	SECONDARY
SECT	SECTION
SED	SEDIMENTATION
SEW	SEWAGE
SG	LAMINATED SAFETY GLASS, SAFETY
SGWB	SUSPENDED GYPSUM WALL BOARD
SH	SHEET
SHA	SURFACE HARDENING AGENT
SHS	SOLIDS HANDLING SYSTEM
SIM	SIMILAR
SK	SINK
SLR	SEALER
SMLS	SEAMLESS EPOXY
SOI	SPRAY– ON INSULATION
SOLN	SOLUTION
SP	SPACE OR SPACES, SPANDREL PANEL, STORMPROOF
SPEC, SPECS	SPECIFICATIONS
SPD	SUMP PUMP DISCHARGE
SPG	SPACING
SPLY	SUPPLY
SQ	SQUARE
SQ FT	SQUARE FOOT, FEET
SQ IN	SQUARE INCH
SR	SHORT RADIUS
SS	START–STOP
SST	STAINLESS STEEL
SSC	SUPERVISORY SET POINT CONTROL
SD	STORM DRAIN
ST	STRAIGHT
STA	STATUS, STATION
STD	STANDARD
STIF	STIFFENER
STIRR	STIRRUP
STL	STEEL
STP	SHIELDED TWISTED PAIR
STRL	STRUCTUAL
STRUCT	STRUCTURE
SUBFL	SUBFLOOR
SUSP	SUSPENDED
SV	SOLENOID VALVE
SVIN	SHEET VINYL
SWBD	SWITCHBOARD
SWGR	SWITCHGEAR
SYMM	SYMMETRICAL
T	THERMOSTAT, TREAD
T&B	TOP AND BOTTOM
T&G	TONGUE AND GROOVE
TA	TRANSFER AIR
TAN	TANGENT
TB	TERMINAL BOARD
TBG	TUBING
TC	TIME TO CLOSE
TC	TURBIDITY CURTAIN
TCAD	TIME CLOSE AFTER DE–ENERGIZATION
TCAE	TIME CLOSE AFTER ENERGIZATION
TDH	TOTAL DYNAMIC HEAD
TDR	TIME DELAY RELAY
TECH	TECHNICAL
TEL	TELEPHONE
TEMP	TEMPORARY, TEMPERATURE
TF	TOP FACE
TFG	TEMPERED FLOAT GLASS
TG	TEMPERED
TH	TOP–HINGED
THD	THREAD
THK	THICKNESS
THRU	THROUGH
TJB	TERMINAL JUNCTION BOX
TL	TEFLON LINED PIPE
T.O.	TIME TO OPEN, TOP OF
TOAE	TIME OPEN AFTER ENERGIZATION
TOC	TOP OF CONCRETE
TOC	TOP OF CURB
TOD	TIME ON DELAY, TOP OF DUCT TOTAL OXYGEN DEMAND
TOF	TOP OF FOOTING
TOG	TOP OF GROUT, TOP OF GRATE
T.O.P.	TOP OF PARAPET
TOS	TOP OF SLAB
TOW	TOP OF WALL
TP	TURNING POINT
TR	TRANSOM, TRUSS
TRANS	TRANSFORMER, TRANSITION
TRANSV	TRANSVERSE
TRD	TREAD
TS	TEMPORARY SEEDING, TUBE STEEL
TSHT	THRESHOLD
TSS	TOTAL SUSPENSION SOLIDS
TST	TOP OF STEEL
TTC	TELEPHONE TERMINAL CABINET
TTD	TOILET TISSUE DISPENSER
TU–X	TREATMENT UNIT NO. X
TURB	TURBIDITY
TWP	TRANSLUCENT WALL PANEL
TX	TRANSFORMER
TYP	TYPICAL
UON	UNLESS OTHERWISE NOTED
UNO	UNLESS NOTED OTHERWISE
UPS	UNINTERRUPTIBLE POWER SUPPLY
USB	UNIT SUBSTATION
UVR	UNDER VOLTAGE RELAY
V	VENT, VALVE
V	VOLTMETER, VOLTS
VB	VAPOR BARRIER (RETARDER)
VC	VERTICAL CURVE
VCP	VITRIFIED CLAY PIPE
VCT	VINYL COMPOSITION TILE
VEL	VELOCITY
VERT	VERTICAL
VHC	VOLATILE HYDROCARBONS
VIB	VIBRATION
VIF	VERIFY IN FIELD
VIN	VINYL
VINT, VT	VINYL TILE
VP	VERTICAL PIVOTED
VPS	VENEER PLASTER SYSTEM
VPC	POINT OF VERTICAL CURVATURE
VPI	POINT OF VERTICAL INTERSECTION
VPT	POINT OF VERTICAL TANGENT
VS	VERTICAL SLIDE
VTR	VENT THRU ROOF
VWC	VINYL WALL COVERING
W	WEST
W/	WITH
WC	WATER COLUMN
WEASTRIP	WEATHERSTRIP
WG	WIRE, WIRE GLASS
WH	WATTHOUR METER
WHD	WATTHOUR DEMAND METER
WP	WATERPROOF, WEATHERPROOF, WORKPOINT
WR	WASTE RECEPTACLE
WRB	WATER RESISTANT GWB
WS	WATER SURFACE, WATERSTOP, WELDED STEEL
WWF	WELDED WIRE FABRIC
WWPH	WET WEATHER PEAK HOUR

NOTES:

1. CONTACT ENGINEER FOR ABBREVIATIONS USED BUT NOT SHOWN ON THIS DRAWING.

STATE OF LOUISIANA
JEROME M. KLIER
Reg. No. 11591
REGISTERED PROFESSIONAL ENGINEER IN CIVIL ENGINEERING

4-13-2016

GENERAL NOTE:

1. THIS IS A STANDARD LEGEND SHEET. THEREFORE, NOT ALL OF THE INFORMATION SHOWN MAY BE USED ON THIS PROJECT.
2. CONTACT ENGINEER FOR ABBREVIATIONS USED BUT NOT SHOWN ON THIS DRAWING.

NO.	DATE	BY	REVISION DESCRIPTION
1	6/24/16	J.M.K.	ABBREVIATIONS ADDED PER ADDENDUM NO. 3

DESIGNED J. KLIER
CHECKED J. RICHARDSON
DETAILED D. SMITH
CHECKED D. ROSHTO
DATE MARCH 2016
SHEET

PARISH EAST BATON ROUGE
CITY BATON ROUGE
PROJECT 11-PS-MS-0035

SHT. G-04R

MULTIPLE PUMP STATIONS HIGHWAY 61 – PLANK ROAD (AREA NFW-C-0009)

ABBREVIATIONS (SHEET 2 OF 2)

GEC Gulf Engineers & Consultants

STRUCTURAL NOTES:

GENERAL

THE STRUCTURES HAVE BEEN DESIGNED FOR IN–SERVICE LOADS. THE METHODS, MEANS, PROCEDURES AND SEQUENCES OF CONSTRUCTION ARE THE RESPONSIBILITY OF THE CONTRACTOR. THE CONTRACTOR SHALL TAKE ALL THE NECESSARY PRECAUTIONS TO ENSURE SAFE WORKING CONDITIONS AND MAINTAIN THE INTEGRITY OF THE STRUCTURES DURING ALL STAGES OF CONSTRUCTION.

THE CONTRACTOR SHALL PREPARE DETAILED WORKING OR SHOP DRAWINGS FOR ALL PARTS OF THE WORK. SUBMISSIONS OF SHOP DRAWINGS TO THE ENGINEER SHALL BE MADE AS PER THE SPECIFICATIONS. THESE SHOP DRAWINGS SHALL BE REVIEWED FOR DESIGN CONCEPTS EXPRESSED IN THE CONTRACT DOCUMENTS. THE CONTRACTOR SHALL BE RESPONSIBLE FOR ALL DIMENSIONS, ACCURACY AND FIT OF WORK.

DESIGN REFERENCES

1. ACI 350 – 06: CODE REQUIREMENTS FOR ENVIRONMENTAL ENGINEERING CONCRETE STRUCTURES.
2. ACI 350.4R – 04: DESIGN CONSIDERATIONS FOR ENVIRONMENTAL ENGINEERING CONCRETE STRUCTURES.

DESIGN DATA

1. DEAD LOADS

   a. SELF–WEIGHT
   b. MECHANICAL EQUIPMENT

2. LIVE LOADS

   a. PUMP STATION ROOF SLAB: 250 PSF + CONCENTRATED LOAD FROM HEAVIEST PUMP

3. SOIL PRESSURE

   a. EQUIVALENT FLUID PRESSURE (SOIL + GROUNDWATER): 100 PSF/FT

CONCRETE AND CONCRETE REINFORCEMENT

CONCRETE SHALL BE NORMAL WEIGHT CONCRETE AND SHALL HAVE A MINIMUM COMPRESSIVE STRENGTH (f'c) AT 28 DAYS OF 4000 PSI.

REINFORCING STEEL SHALL BE DEFORMED CARBON STEEL BARS CONFORMING TO ASTM A615–09b AND SHALL HAVE A MINIMUM YIELD STRENGTH OF 60,000 PSI.

MINIMUM CONCRETE COVER OVER REINFORCEMENT SHALL BE 2", UNLESS OTHERWISE NOTED ON THE PLANS.

UNLESS NOTED ON THE PLANS, CHAMFER ALL EXPOSED CORNERS 1".

⚠ CONCRETE MIX SHALL INCLUDE A CRYSTALLINE WATER PROOFING ADDITIVE CONFORMING TO SUBSECTION 805–14 (F) OF THE SPECIFICATIONS SPECIAL PROVISIONS.

⚠ PRECAST CONCRETE WET WELL

IN LIEU OF THE CAST–IN–PLACE CONCRETE WET WELL CONSTRUCTION THE CONTRACTOR MAY FURNISH A PRECAST CONCRETE WET WELL, TOP (ROOF) AND BASE SLAB CONFORMING TO SECTIONS: 805–14; 805–49.1 & 805–50.1 OF THE SPECIFICATIONS SPECIAL PROVISIONS.

⚠ PROTECTIVE COATINGS:

1. ALL PROTECTIVE COATING WORK SHALL BE PERFORMED IN ACCORDANCE WITH SECTION 822 OF THE SPECIAL PROVISIONS.
2. ALL BURIED EXTERIOR WET WELL WALLS SHALL BE PREPARED AND COAL TAR EPOXY COATED PER SYSTEM 109. COLOR – BLACK
3. ALL MANHOLES, PIPING, CONDUITS, VALVES, ETC. SHALL BE PREPARED AND COATED IN ACCORDANCE WITH THE APPLICABLE REQUIREMENTS AND COLORS FOR THESE ITEMS PER SECTION 822 OF THE SPECIFICATIONS SPECIAL PROVISIONS.
4. PS 513 CONTROL BUILDING SHALL BE PAINTED IN ACCORDANCE WITH THE ARCHITECTURAL PLANS AND SECTION 822 OF THE SPECIAL PROVISIONS. ALL OTHER MANHOLES, EXPOSED PIPING, CONDUITS, VALVES, ETC. SHALL BE PREPARED AND COATED IN ACCORDANCE WITH THE APPLICABLE REQUIREMENTS AND COLORS FOR THESE ITEMS PER SECTION 822 OF THE SPECIFICATIONS SPECIAL PROVISIONS.
5. ALL BARRIER CURBS AND EDGES OF RAISED GENERATOR AND ODOR CONTROL PADS SHALL BE PREPARED AND COATED WITH ACRYLIC LATEX PER SYSTEM 7. COLOR – SAFETY YELLOW.

REINFORCEMENT, EMBEDMENT AND SPLICE TABLE NOTES:

1. USE THE BASIC TABLE IF ALL THE FOLLOWING CONDITIONS ARE MET:
   a. CENTER–TO–CENTER BAR SPACING LATERALLY IS AT LEAST 3 BAR DIAMETERS.
   b. DISTANCE FROM THE CENTER OF A BAR TO THE NEAREST CONCRETE SURFACE MUST BE AT LEAST 2 BAR DIAMETERS.
2. THE ALTERNATE TABLE MAY BE USED IF ALL OF THE FOLLOWING CONDITIONS ARE MET:
   a. CENTER–TO–CENTER BAR SPACING LATERALLY IS AT LEAST 5 BAR DIAMETERS.
   b. DISTANCE FROM THE CENTER OF A BAR TO THE NEAREST CONCRETE SURFACE MUST BE AT LEAST 2.5 BAR DIAMETERS.
3. TOP BARS ARE HORIZONTAL BARS AND BARS INCLINED LESS THAN 45 DEGREES WITH RESPECT TO A HORIZONTAL PLANE WHICH ARE PLACED SUCH THAT MORE THAN 12 INCHES OF CONCRETE IS CAST IN THE MEMBER BELOW THE BAR.
4. THE TABLES SHOWN BELOW ARE FOR NORMAL WEIGHT CONCRETE AND UNCOATED REINFORCING BARS.

⚠ CONCRETE PAVING WORK:

1. ALL REQUIRED CONCRETE PAVING WORK SHALL CONFORM TO SECTION 907, "CONCRETE CURBS, WALKS, DRIVES AND INCIDENTAL PAVING" OF THE 1997 STANDARD SPECIFICATIONS FOR PUBLIC WORKS CONSTRUCTION.
2. ALL PAVING DETAILS, JOINT DETAILS, ETC. SHALL CONFORM TO THE DETAILS SHOWN ON STANDARD PLAN NO. 502–01 (3 SHEETS).
3. ALL DRIVEWAY DETAILS SHALL CONFORM TO THE DETAILS SHOWN ON STANDARD PLAN NO. 907–03 (3 SHEETS).

REINFORCEMENT EMBEDMENT AND SPLICE TABLES

BAR SIZE	BASIC TABLE				ALTERNATE TABLE			
	MINIMUM EMBEDMENT LENGTH, INCHES		MINIMUM LAP LENGTH INCHES		MINIMUM EMBEDMENT LENGTH, INCHES		MINIMUM LAP LENGTH INCHES	
	TOP	OTHER	TOP	OTHER	TOP	OTHER	TOP	OTHER
3	18	14	24	18	12	12	14	12
4	25	19	32	25	15	12	19	15
5	31	24	40	31	18	14	24	18
6	37	28	48	37	22	17	29	22
7	54	42	70	54	32	25	42	32
8	62	47	80	62	37	28	48	37
9	69	53	90	69	42	32	54	42
10	77	59	100	77	46	36	60	46
11	85	65	110	85	51	39	66	51

STATE OF LOUISIANA
JEROME M. KLIER
Reg. No. 11591
REGISTERED PROFESSIONAL ENGINEER IN CIVIL ENGINEERING
4-13-2016

NO.	DATE	BY	REVISION DESCRIPTION
1	6/24/16	J.M.K.	REVISED FOR ADDENDUM NO. 3

DESIGNED K. REBELLO
CHECKED R. McLELLAN
DETAILED D. INWOOD
CHECKED K. REBELLO
DATE MARCH 2016
SHEET

PARISH EAST BATON ROUGE
CITY BATON ROUGE
PROJECT 11–PS–MS–0035

SHT. G–07R

MULTIPLE PUMP STATIONS HIGHWAY 61 – PLANK ROAD (AREA NFW–C–0009)

STRUCTURAL NOTES

GEC Gulf Engineers & Consultants

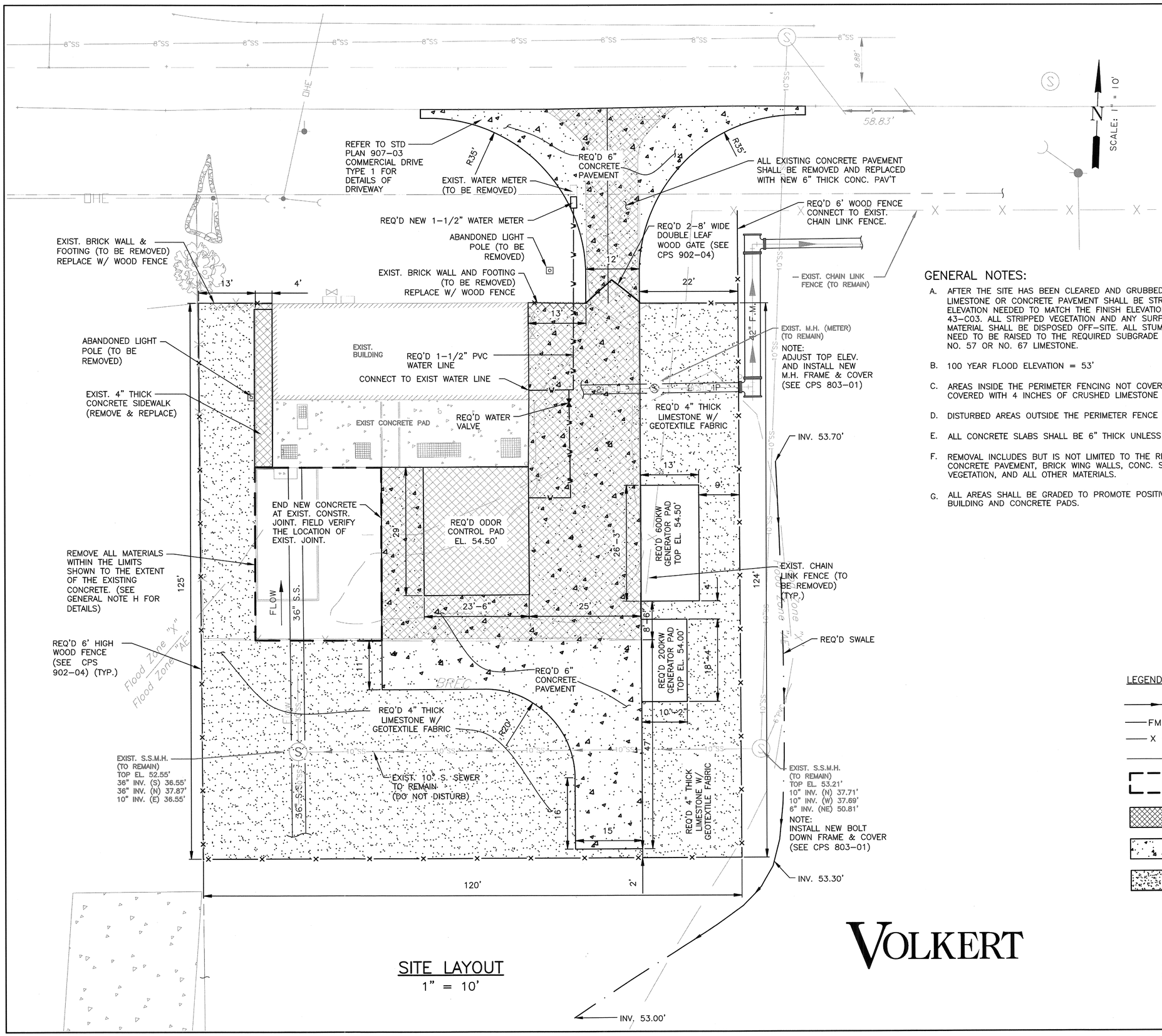

SITE LAYOUT
1" = 10'

GENERAL NOTES:

A. AFTER THE SITE HAS BEEN CLEARED AND GRUBBED, THE AREA TO BE COVERED WITH LIMESTONE OR CONCRETE PAVEMENT SHALL BE STRIPPED TO THE REQ'D SUBGRADE ELEVATION NEEDED TO MATCH THE FINISH ELEVATIONS SHOWN ON SHEET NO. 43-C03. ALL STRIPPED VEGETATION AND ANY SURPLUS EARTHWORK EXCAVATED MATERIAL SHALL BE DISPOSED OFF-SITE. ALL STUMP HOLES AND LOW AREAS THAT NEED TO BE RAISED TO THE REQUIRED SUBGRADE ELEVATION SHALL BE FILLED WITH NO. 57 OR NO. 67 LIMESTONE.

B. 100 YEAR FLOOD ELEVATION = 53'

C. AREAS INSIDE THE PERIMETER FENCING NOT COVERED BY CONCRETE SHALL BE COVERED WITH 4 INCHES OF CRUSHED LIMESTONE WITH GEOTEXTILE FABRIC.

D. DISTURBED AREAS OUTSIDE THE PERIMETER FENCE TO BE SODDED.

E. ALL CONCRETE SLABS SHALL BE 6" THICK UNLESS OTHERWISE SPECIFIED.

F. REMOVAL INCLUDES BUT IS NOT LIMITED TO THE REMOVAL OF ALL EXISTING CONCRETE PAVEMENT, BRICK WING WALLS, CONC. SIDEWALKS, GRAVEL, DEBRIS, WOOD, VEGETATION, AND ALL OTHER MATERIALS.

G. ALL AREAS SHALL BE GRADED TO PROMOTE POSITIVE DRAINAGE AWAY FROM THE BUILDING AND CONCRETE PADS.

LEGEND

- SEWER LINE
- FM — FORCE MAIN
- X — FENCE
- SWALE DITCH
- LIMITS OF SELECTIVE REMOVAL
- REMOVAL
- CONCRETE
- LIMESTONE

VOLKERT

STATE OF LOUISIANA ASHLEY N. BECKENDORF License No. 37334 PROFESSIONAL ENGINEER 6/29/16

NO.	DATE	REVISION DESCRIPTION	BY
1	6/24/16	GEN. PLAN REV. PER ADDENDUM NO. 3	J.M.K.

DESIGNED A.N.B. CHECKED E.J.L. DETAILED A.N.B. CHECKED E.J.L. DATE MARCH 2016 SHEET

PARISH EAST BATON ROUGE CITY BATON ROUGE PROJECT 11-PS-MS-0035

SHT. 43-C02R

MULTIPLE PUMP STATIONS HIGHWAY 61 - PLANK ROAD (AREA NFW-C-0009)

SITE PLAN PUMP STATION NO. 43

GEC Gulf Engineers & Consultants

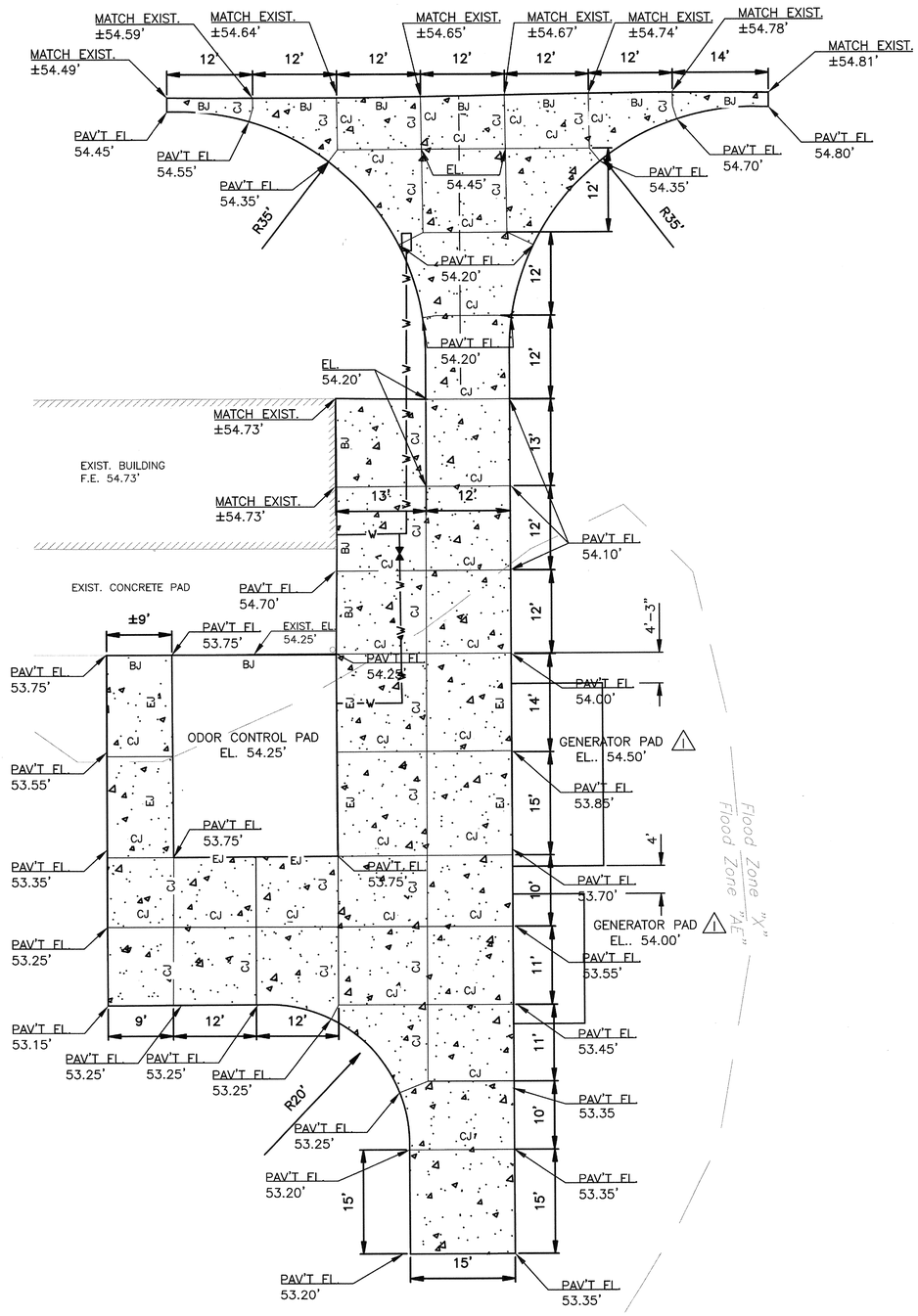

CONCRETE SLAB DETAILS

1" = 10'

GENERAL NOTES:

A REFER TO DPW STANDARD PLAN 502-01 FOR CONCRETE PAVEMENT DETAILS.

B REFER TO DPW STANDARD PLAN 907-03 FOR DRIVEWAY DETAILS.

⚠ C SEE SHEET NO. 43-S02R FOR GENERATOR PAD DETAILS.

LEGEND

REQ'D CONCRETE

VOLKERT

STATE OF LOUISIANA ASHLEY N. BECKENDORF Licensed No. 37534 PROFESSIONAL ENGINEER IN CIVIL ENGINEERING 6/29/16

SHT.	43-C03R
PARISH	EAST BATON ROUGE
CITY	BATON ROUGE
PROJECT	11-PS-MS-0035
DESIGNED	A.N.B.
CHECKED	E.J.L.
DETAILED	A.N.B.
CHECKED	E.J.L.
DATE	MARCH 2016
SHEET	
BY	J.M.K.

NO.	DATE	REVISION DESCRIPTION
1	6/24/16	GEN. PLAN REV. ADDED PER ADDENDUM NO. 3

PUBLIC WORKS

MULTIPLE PUMP STATIONS HIGHWAY 61 – PLANK ROAD (AREA NFW-C-0009)

JOINT LAYOUT
PUMP STATION NO. 43

GEC Gulf Engineers & Consultants

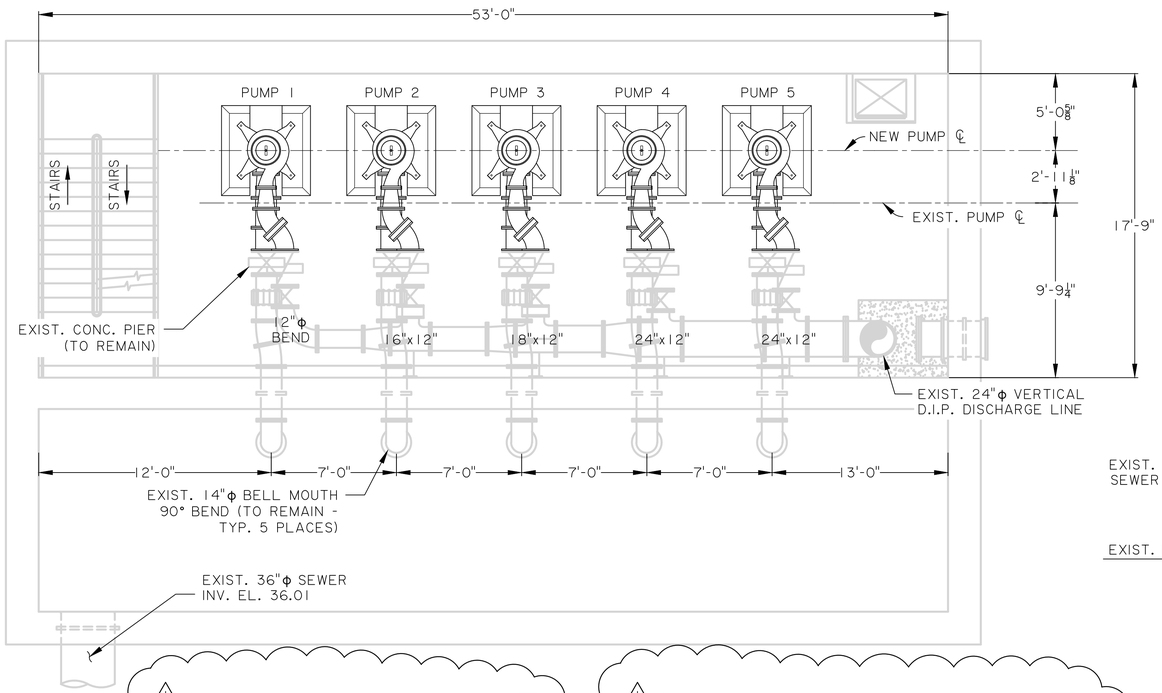

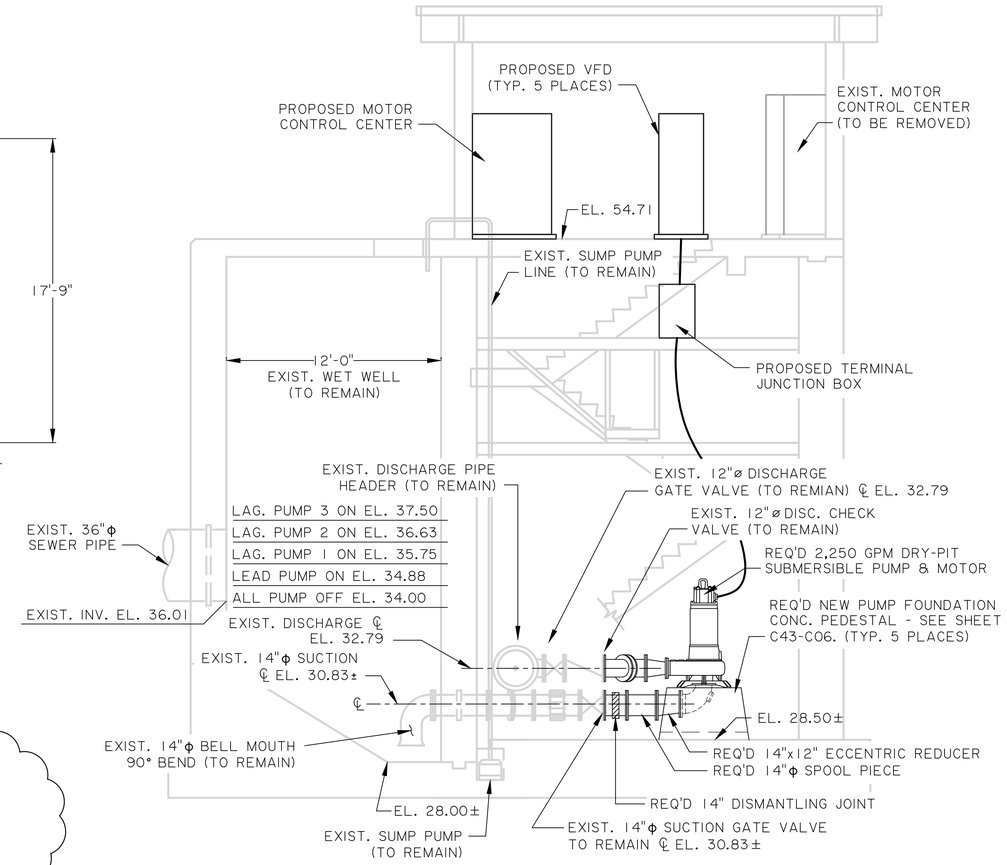

⚠1

PUMP STATION 43 REQUIRED PUMP CURVE (±5%)

FLOW (GPM)	SHUT OFF	1,000	3,000
HEAD (FT)	180 Ft.	160	120

⚠1

PUMP STATION 43 – PUMP SCHEDULE

CAPACITY (GPM)	HEAD (FT)	MIN.EFF. (±5%)	RPM	PUMP DISCHARGE (IN)
2,250	128	70.0	1185	8"

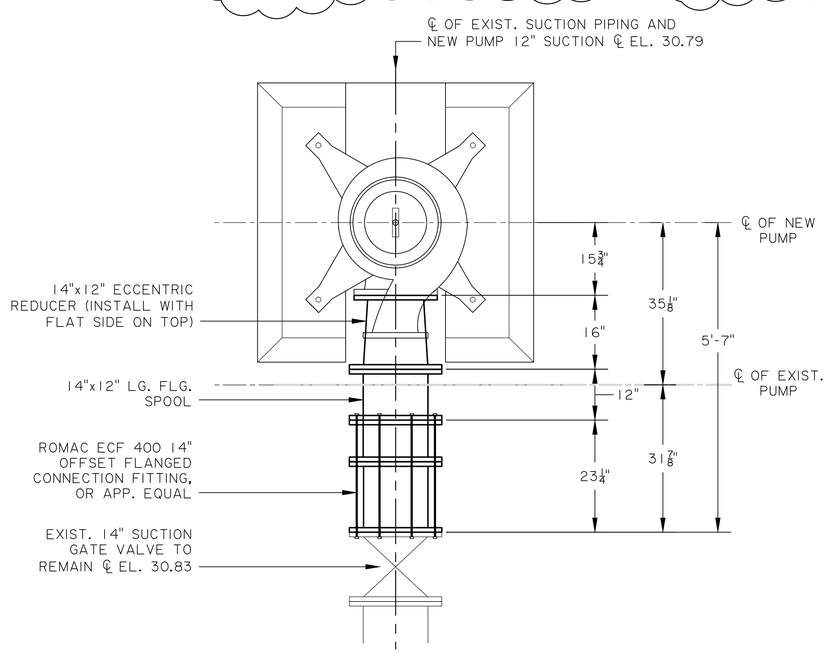

TYPICAL SUCTION PIPING PLAN
(DISCHARGE PIPING OMITTED FOR CLARITY)

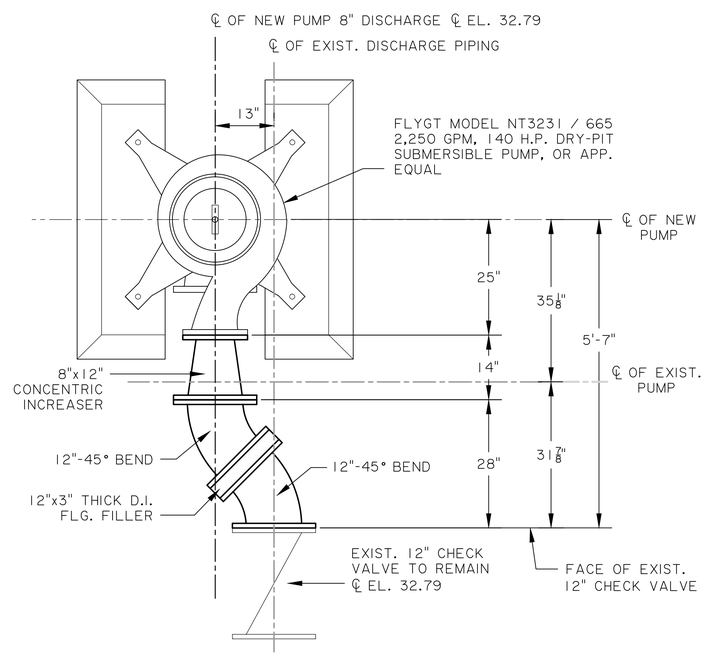

TYPICAL DISCHARGE PIPING PLAN
(SUCTION PIPING OMITTED FOR CLARITY)

NOTES:

1. SEE NOTES NO. 1 THRU NO. 6, SHEET NO. 43-C04 PRIOR TO REMOVING ANY EQUIPMENT OR PIPING.
2. ALL DIMENSIONS, SIZES, EQUIPMENT, ETC. SHOWN ARE BASED ON EXISTING DRAWINGS AND MANUFACTURES INFORMATION AND NO GUARANTEE IS MADE AS TO THE ACCURACY OF THE INFORMATION INDICATED. THEREFORE THE CONTRACTOR SHALL BE RESPONSIBLE FOR THE FIELD VERTIFICATION OF ALL DIMENSIONS SIZES AND EQUIPMENT PRIOR TO SUBMITTING ANY SHOP DRAWINGS AND/OR EQUIPMENT SUBMITTALS.
3. THE CONTRACTOR SHALL BE RESPONSIBLE FOR ANY PIPING MODIFICATIONS TO MATCH THE EXISTING SUCTION AND DISCHARGE GATE VALVES REQUIRED FOR THE INSTALLATION OF THE NEW SUBMERSIBLE PUMPS AND MOTORS. PIPING MODIFICATIONS MAY INCLUDE, BUT ARE NOT LIMITED TO, ADJUSTMENTS FOR BOTH VERTICAL AND HORIZONTAL PUMP SUCTION AND DISCHARGE CONNECTIONS, MISALIGNMENTS, ANY REQUIRED PIPING OFFSETS, SIZES AND LENGTHS.
4. THE CONTRACTOR SHALL PROVIDE ANY REQUIRED PUMP FOUNDATION PADS, VALVE SUPPORT PEDESTALS, BASE PLATES, ANCHORS, HARDWARE, ETC. REQUIRED FOR THE COMPLETE INSTALLATION OF THE NEW SUBMERSIBLE PUMPS, MOTORS AND SUCTION/DISCHARGE PIPING SYSTEMS.
5. THE CONTRACTOR SHALL BE RESPONSIBLE FOR REPAIRING OF ANY EQUIPMENT, MATERIALS, OR WALL AND ROOF SURFACES DAMAGED DURING CONSTRUCTION.

STATE OF LOUISIANA
JEROME M. KLIER
Reg. No. 11591
REGISTERED PROFESSIONAL ENGINEER IN CIVIL ENGINEERING
4-13-2016

NO.	DATE	REVISION DESCRIPTION	BY
1	6/24/16	REVISED PUMP SCH. PER ADDENDUM NO. 3	J.M.K.

DESIGNED J. KLIER
CHECKED J. RICHARDSON
DETAILED D. SMITH
CHECKED D. ROSHTO
DATE MARCH 2016
SHEET

PARISH: EAST BATON ROUGE
CITY: BATON ROUGE
PROJECT: 11-PS-MS-0035

SHT. 43-C05R

MULTIPLE PUMP STATIONS HIGHWAY 61 – PLANK ROAD (AREA NFW-C-0009)

PROPOSED SUBMERSIBLE PUMP INSTALLATION PUMP STATION NO. 43

PUBLIC WORKS

GEC Gulf Engineers & Consultants

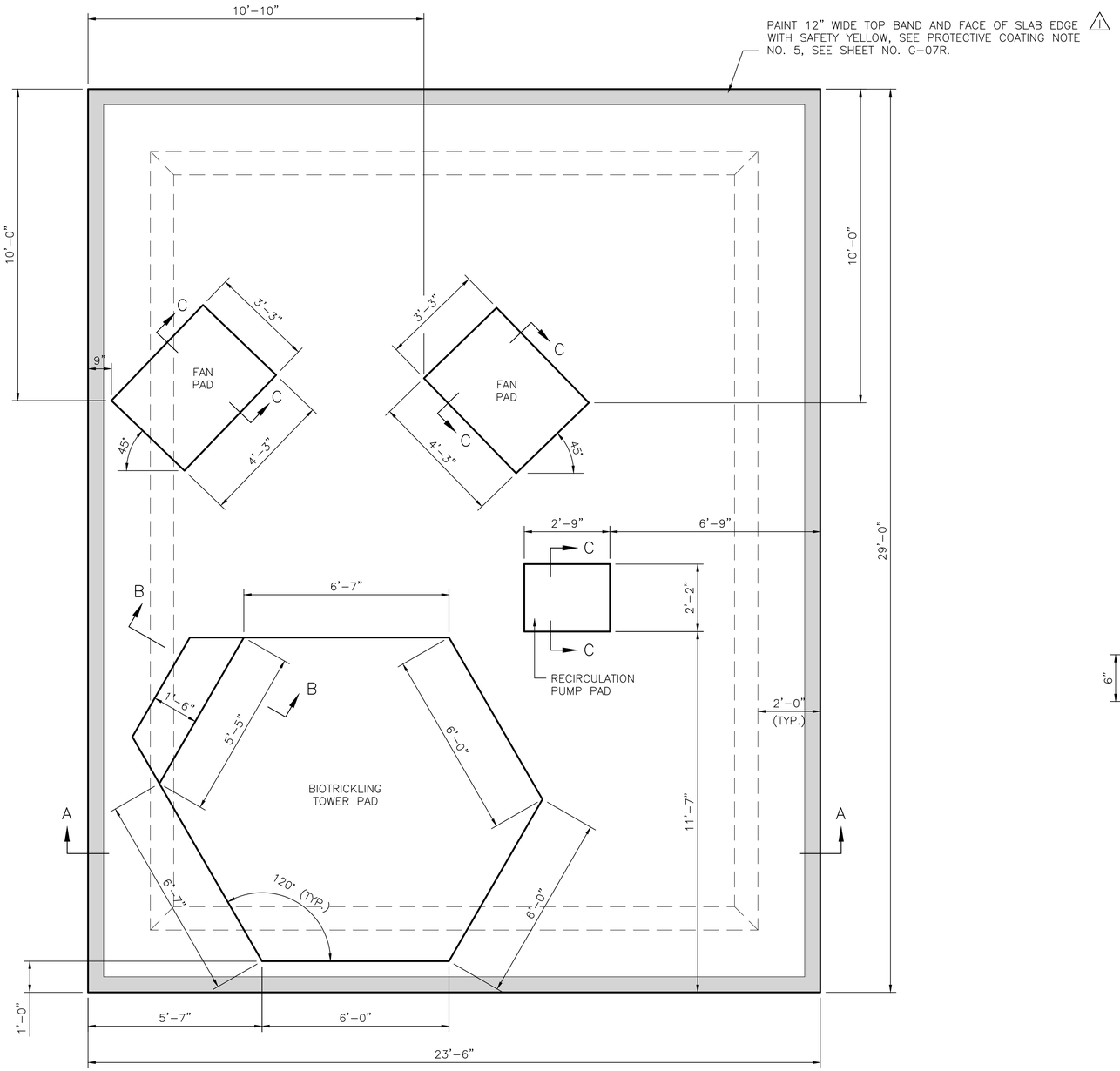

PLAN – ODOR CONTROL SLAB

SCALE: 1/2" = 1'-0"

1 PAINT THE FACE OF SLAB EDGES AND A 12" WIDE TOP BAND ALONG ALL SIDES WITH SAFETY YELLOW. SEE PROTECTIVE COATINGS NOTE NO. 5, SHEET NO. G-07R

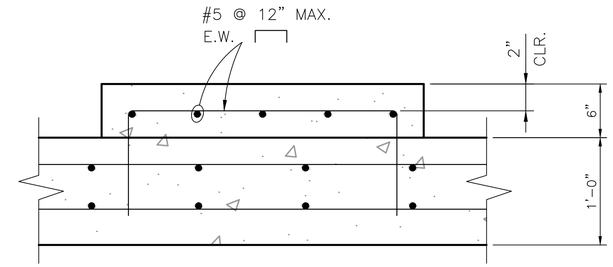

SECTION C–C

SCALE: 1½" = 1'-0"

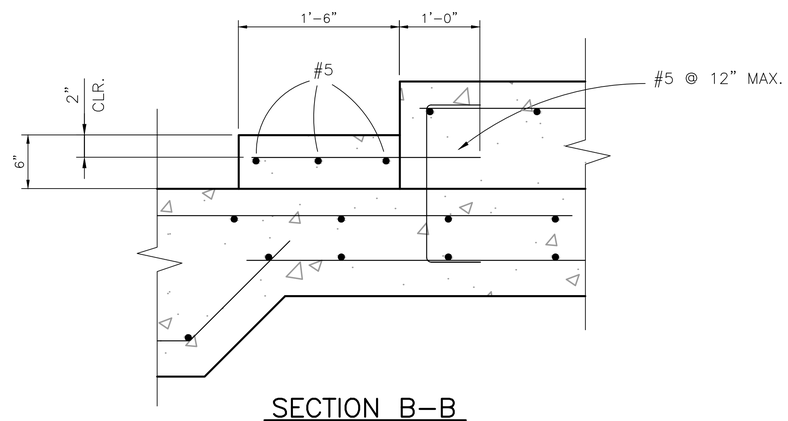

SECTION B–B

SCALE: 1½" = 1'-0"

STATE OF LOUISIANA
KEITH J. REBELLO
REG No. 24937
REGISTERED
PROFESSIONAL ENGINEER
April 13, 2016

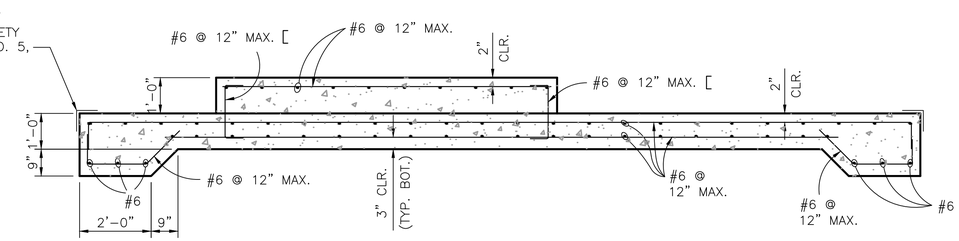

SECTION A–A

SCALE: 1/2" = 1'-0"

NOTES:

1. COORDINATE WITH ODOR CONTROL, ELECTRICAL, MECHANICAL, AND TANK CONTRACTORS BEFORE CONCRETE IS POURED.
2. CONNECT ALL EQUIPMENT WITH ANCHOR BOLTS PER MANUFACTURER'S SPECIFICATIONS.

SHT.	43-S01
PARISH	EAST BATON ROUGE
CITY	BATON ROUGE
PROJECT	11-PS-MS-0035
DESIGNED	K. REBELLO
CHECKED	R. McLELLAN
DETAILED	D. SMITH
CHECKED	K. REBELLO
DATE	MARCH 2016
SHEET	

NO.	DATE	REVISION DESCRIPTION	BY
1	6/24/16	GEN. PLAN REV. ADDED PER ADDENDUM NO. 3	J.M.K.

MULTIPLE PUMP STATIONS HIGHWAY 61 – PLANK ROAD (AREA NFW-C-0009)

ODOR CONTROL SLAB
PUMP STATION NO. 43

GEC Gulf Engineers & Consultants

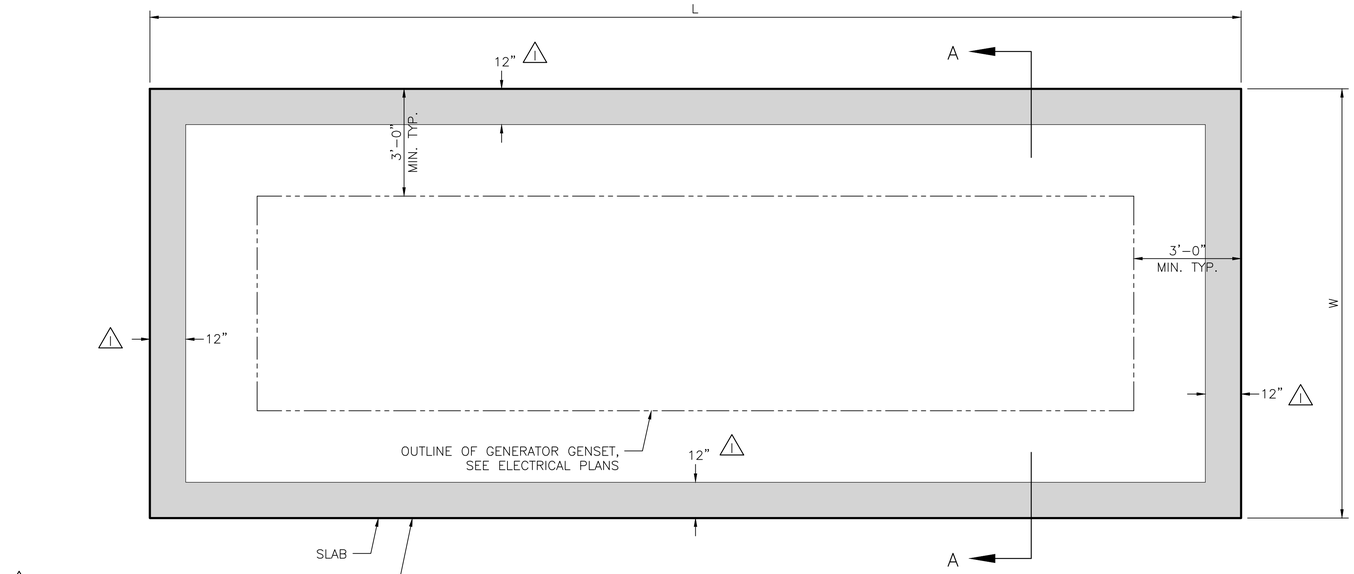

PAINT 12" WIDE TOP BAND AND FACE OF SLAB EDGE WITH SAFETY YELLOW, SEE PROTECTIVE COATING NOTE NO. 5, SEE SHEET NO. G-07R.

GENERATOR SLAB PLAN

SCALE: N.T.S.

GENERATOR PAD SLAB SIZE		
GENERATOR SIZE	LENGTH (L)	WIDTH (W)
600 KW (20'-3" X 7'-0")	26'-3"	13'-0"
200 KW (12'-4" X 4'-2")	18'-4"	10'-2"

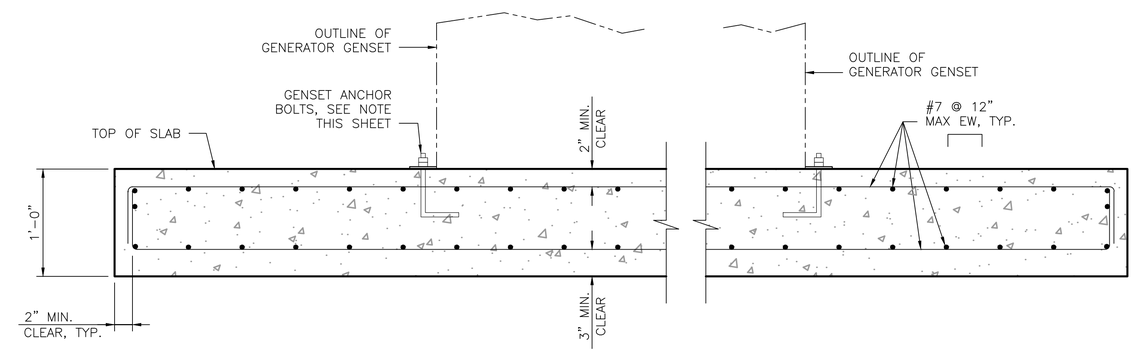

SECTION A-A

SCALE: N.T.S.

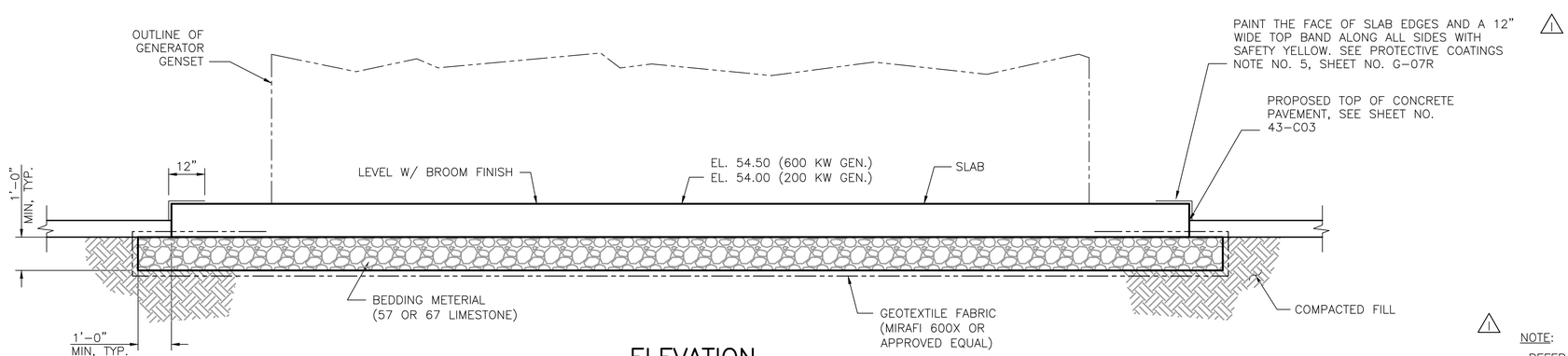

ELEVATION

N.T.S.

STATE OF LOUISIANA
KEITH J. REBELLO
REG No. 24937
REGISTERED
PROFESSIONAL ENGINEER
ENGINEERING
April 13, 2016

NOTE:

REFER TO GENERATOR MANUFACTURER'S SPECIFICATIONS FOR GENSET ANCHOR BOLT SIZE AND LOCATIONS; SLAB CONDUIT PENETRATION LOCATIONS, AND OTHER MFG. DETAILS.

SHT. 43-S02R

PARISH: EAST BATON ROUGE
CITY: BATON ROUGE
PROJECT: 11-PS-MS-0035

DESIGNED K. REBELLO
CHECKED R. McLELLAN
DETAILED D. INWOOD
CHECKED K. REBELLO
DATE MARCH 2016
SHEET
BY J.M.K.

NO.	DATE	REVISION DESCRIPTION
1	6/24/16	GEN. PLAN REV. ADDED PER ADDENDUM NO. 3

MULTIPLE PUMP STATIONS HIGHWAY 61 – PLANK ROAD
(AREA NFW-C-0009)

GENERATOR SLAB AND DETAILS
PUMP STATION NO. 43

GEC Gulf Engineers & Consultants

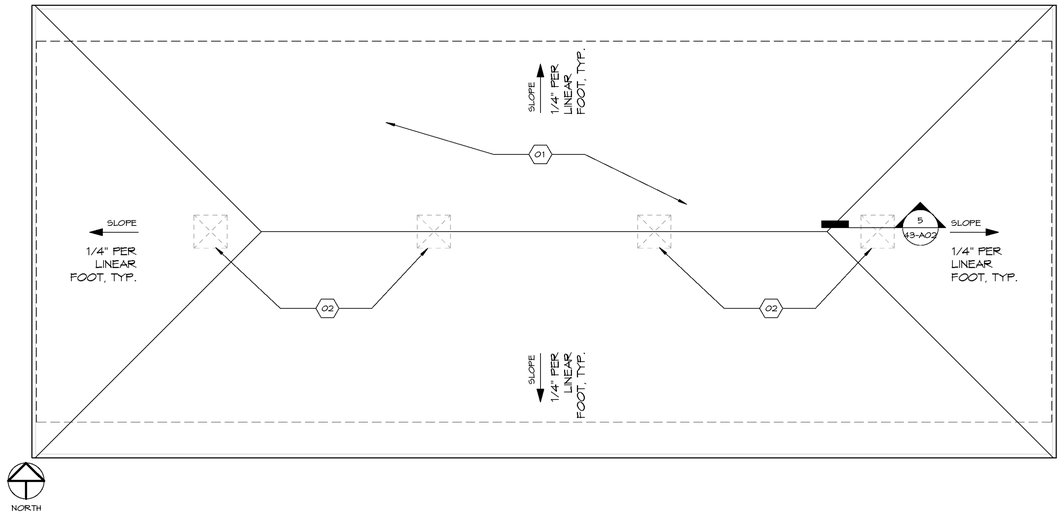

1 ROOF PLAN

1/4" = 1'-0" RE: /

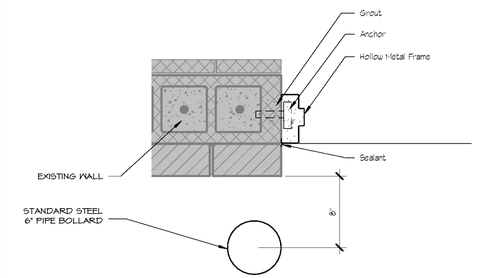

2 DOOR JAMB DETAIL

1 1/2" = 1'-0" RE: 2 /43-A01

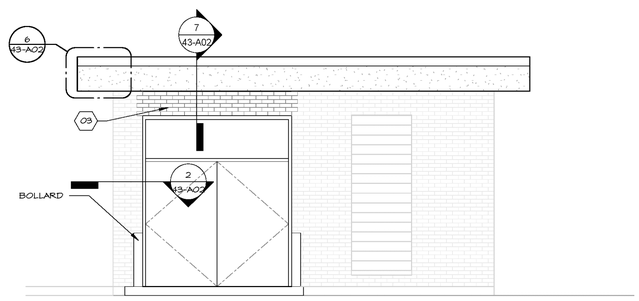

3 EAST ELEVATION

1/4" = 1'-0" RE: /

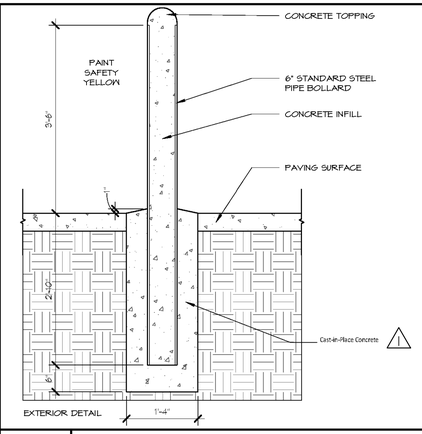

4 BOLLARD DETAIL, TYP.

3/4" = 1'-0" RE: /

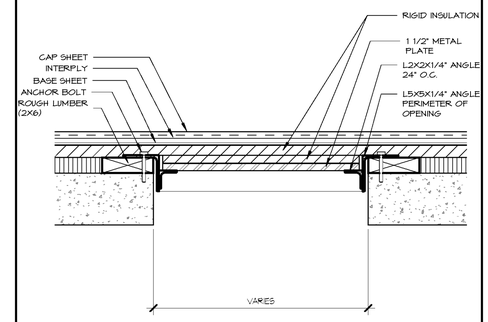

5 ROOF CLOSURE DETAIL

1 1/2" = 1'-0" RE: 1 /43-A02

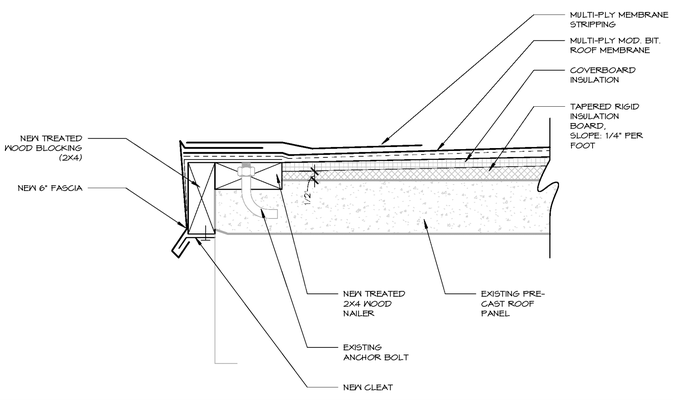

6 ROOF EDGE, TYP.

3" = 1'-0" RE: 3 /43-A02

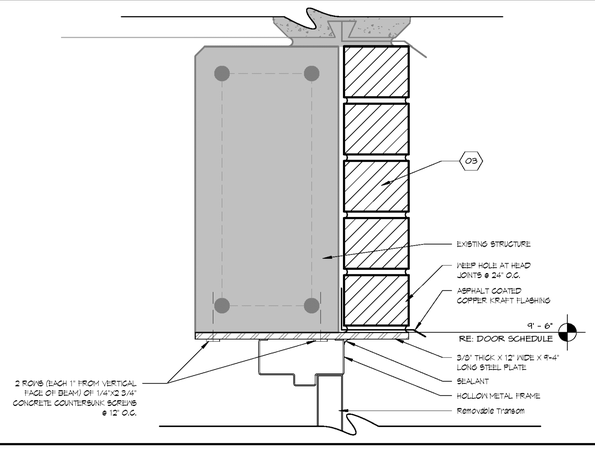

7 DOOR HEAD DETAIL

3" = 1'-0" RE: 3 /43-A02

REFERENCE NOTES

01 REMOVE & REPLACE EXISTING BUILT UP ROOF WITH NEW MODIFIED BITUMEN ROOFING

02 EXISTING SKYLIGHT OPENINGS UNDER NEW BUILT UP ROOF. CLOSE IN & SEAL WHEN APPLYING NEW ROOF.

03 CONTRACTOR TO RECONSTRUCT & TOOTH IN BRICK VENEER IF NECESSARY.

GENERAL NOTES

SHAWN T. FISHER No. 7525 STATE OF LOUISIANA REGISTERED ARCHITECT

CRUMPWILSON ARCHITECTS

NO.	DATE	DELETED SPEC. REF.	REVISION DESCRIPTION	S.T.F. BY
1	6/24/16			

DESIGNED PD
CHECKED SF
DETAILED PD
CHECKED SF
DATE MARCH 2016
SHEET

PARISH EAST BATON ROUGE
CITY BATON ROUGE
PROJECT 11-PS-MS-0035

SHT. 43-A02R

MULTIPLE PUMP STATIONS HIGHWAY 61 – PLANK ROAD (AREA NFW-C-0009)

ROOF PLAN & DETAILS
PUMP STATION NO. 43

PUBLIC WORKS

GEC Gulf Engineers & Consultants

PLAN NOTES:

1. VERIFY AVAILABLE SHORT CIRCUIT CURRENT WITH SERVING ELECTRICAL UTILITY. PROVIDE LABEL ON SERVICE EQUIPMENT PER NEC 110.24.
2. PROVIDE 1" SCH 40 PVC CONDUIT STUB-UP IN SLAB FOR ALL GROUND RING CONNECTIONS TO EQUIPMENT.
3. ALL GROUND CONNECTIONS TO REINFORCING STEEL SHALL BE #4 AWG UNLESS OTHERWISE NOTED.

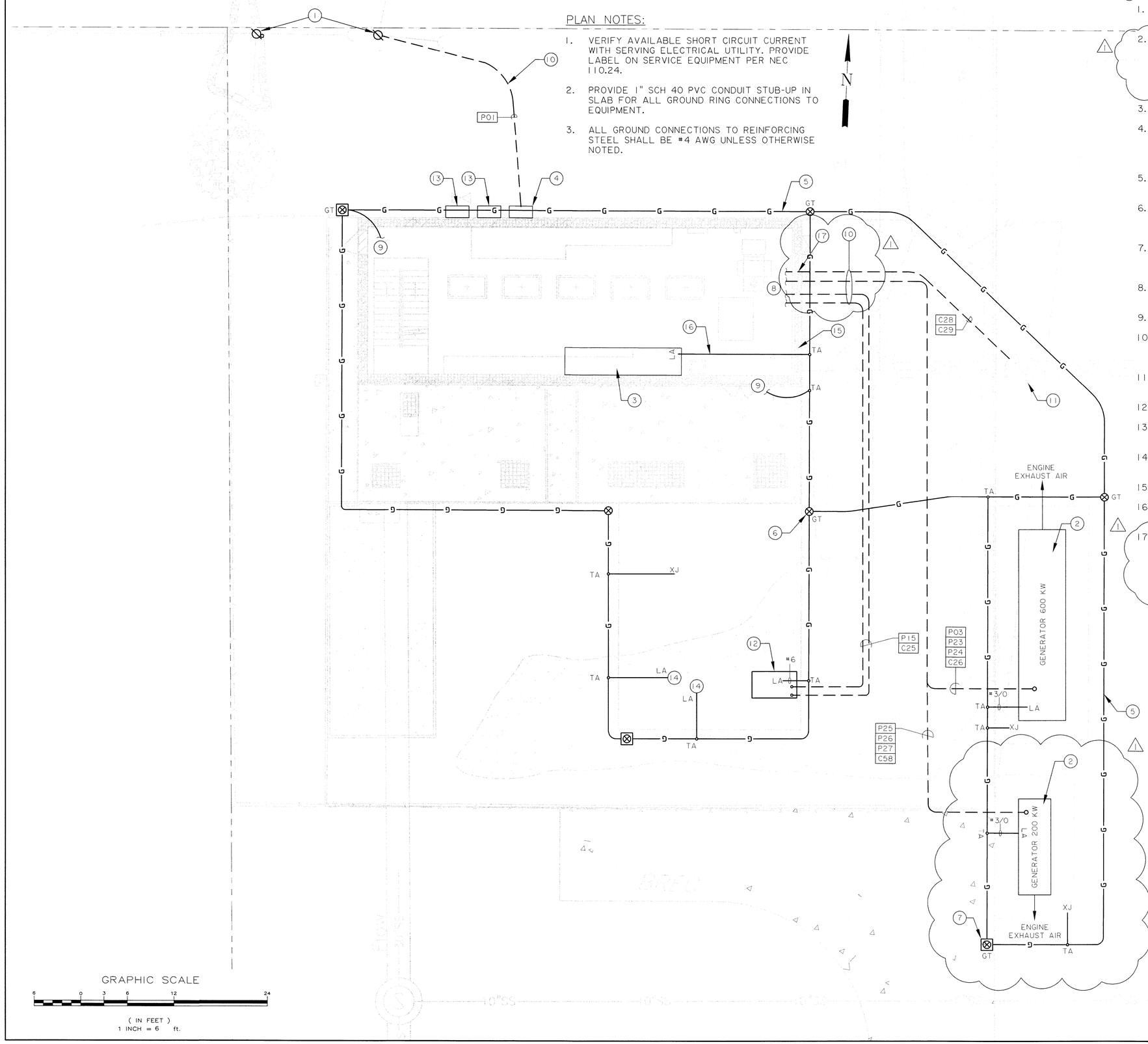

KEY NOTES:

1. EXISTING 3ϕ POLE-MOUNTED UTILITY TO BE REFURBISHED AS NECESSARY BY ENTERGY.
2. NEW 600 KW AND 200 KW GENERATORS FURNISHED UNDER SEPARATE CONTRACT AND INSTALLED BY CONTRACTOR UNDER THIS CONTRACT. OWNER FURNISHED PRODUCTS SEE SPEC SECTION 01650. COORDINATE STUB-UP LOCATION WITH GENERATOR DRAWINGS.
3. NEW 1600 A MAIN SWITCHBOARD MSA.
4. NEW UTILITY METER PROVIDED BY ENTERY. CONTRACTOR SHALL FURNISH NEW CT CABINET, METER SOCKET AND CUSTOMER LUG BOX PER ENTERGY REQUIREMENTS.
5. NEW #4/0 AWG BARE STRANDED COPPER GROUND RING. (TYP.) MINIMUM DEPTH 30".
6. NEW 3/4" x 10'-0" COPPERWELD GROUND ROD. CONNECT TO GROUND RING VIA EXOTHERMIC WELD. (TYP.)
7. NEW GROUND WELL WITH 3/4" x 10'-0" COPPERWELD GROUND ROD. CONNECT TO GROUND RING VIA EXOTHERMIC WELD. (TYP.)
8. RE: 43-E04 CONTROL BUILDING FOR CONTINUATION.
9. RE: 43-E10 FOR LIGHTNING PROTECTION PLAN.
10. RE: STANDARD PLANS 805-05 FOR UNDERGROUND DUCT BANK CONSTRUCTION DETAIL.
11. NEW FLOW METER (FT-05-19) TO REPLACE MISSING METER.
12. ODOR CONTROL PANEL.
13. REMOVE EXISTING SERVICE EQUIPMENT AFTER ALL NEW EQUIPMENT IS IN SERVICE.
14. COORDINATE LOCATIONS WITH LIGHTNING PROTECTION CONTRACTOR.
15. NEW 8' WIDE DOUBLE DOOR.
16. ROUTE MSA GROUND CONNECTION (#3/0 AWG) IN 1" SCH 80 PVC CONDUIT.
17. CONTRACTOR SHALL SEAL CONDUIT PENETRATIONS. SUBMIT PLAN FOR CONDUIT SUPPORT AND TRANSITION TO UNDERGROUND DUCT BANK FOR APPROVAL PRIOR TO CONSTRUCTION. ANY PULLBOXES REQUIRED FOR TRANSITION SHALL BE INCLUDED.

STATE OF LOUISIANA
DERRICK S. COUIDEAU
REG. No. 33288
REGISTERED PROFESSIONAL ENGINEER
ELECTRICAL ENGINEERING
6/23/16

NO.	DATE	REVISION DESCRIPTION	BY
1	6/24/16	ADDED PER ADDENDUM NO. 3	K.B.

DESIGNED K. BLACKBURN
CHECKED D. COUDEAU
DETAILED D. SMITH
CHECKED M. EDWARDS
DATE MARCH 2016
SHEET
PARISH EAST BATON ROUGE
CITY BATON ROUGE
PROJECT 11-PS-MS-0035
SHT. 43-E01R

MULTIPLE PUMP STATIONS HIGHWAY 61 – PLANK ROAD
(AREA NFW-C-0009)
ELECTRICAL SITE PLAN AND GROUNDING SITE PLAN
PUMP STATION NO. 43

GEC Gulf Engineers & Consultants

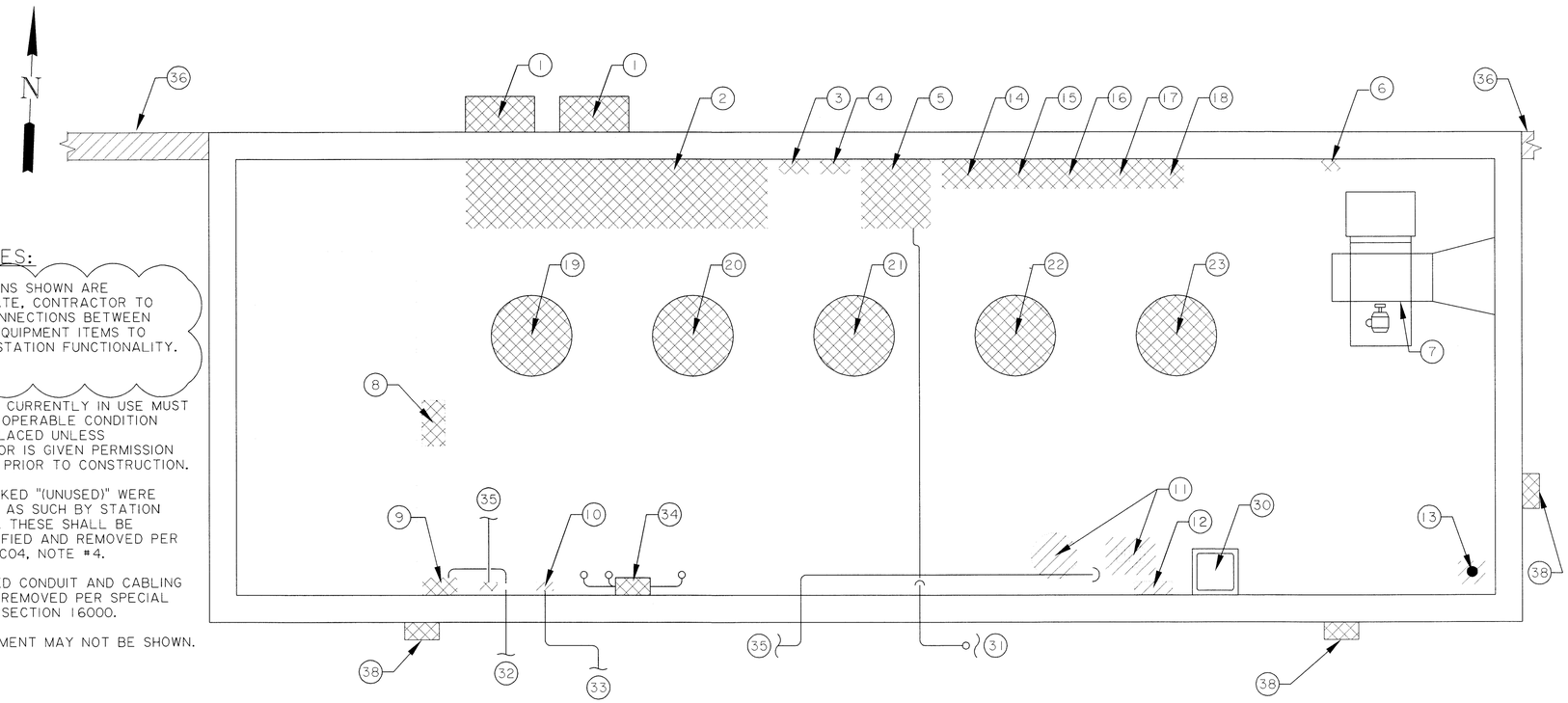

1 CONTROL ROOM - DEMOLITION PLAN
SCALE: 1" = 3'

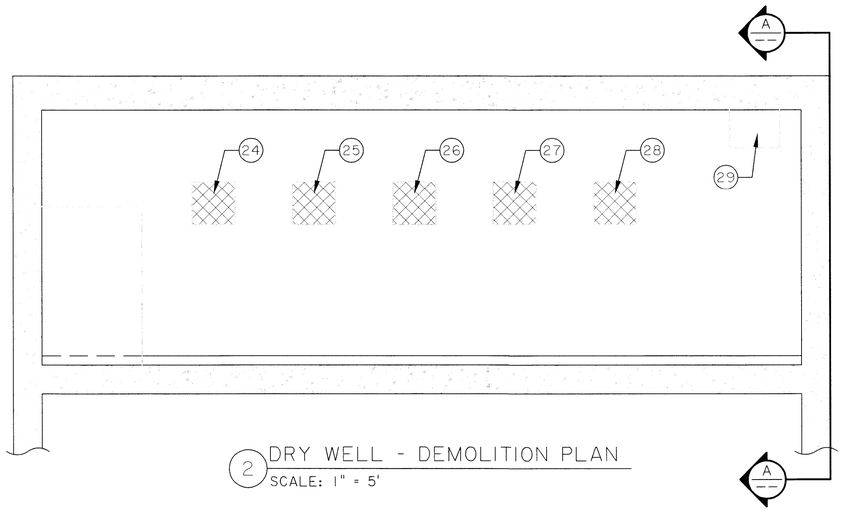

2 DRY WELL - DEMOLITION PLAN
SCALE: 1" = 5'

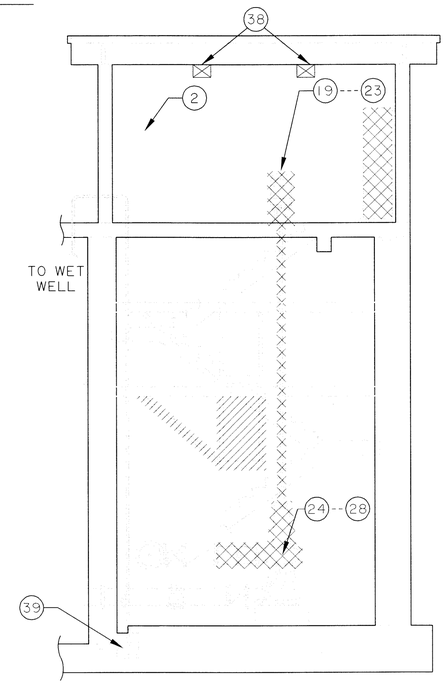

A PS 43 ELEVATION - DEMOLITION PLAN (EAST LOOKING WEST)
SCALE: 1" = 5'

PLAN NOTES:

1. CONNECTIONS SHOWN ARE APPROXIMATE. CONTRACTOR TO VERIFY CONNECTIONS BETWEEN EXISTING EQUIPMENT ITEMS TO MAINTAIN STATION FUNCTIONALITY.
2. NOT USED.
3. ALL ITEMS CURRENTLY IN USE MUST REMAIN IN OPERABLE CONDITION UNTIL REPLACED UNLESS CONTRACTOR IS GIVEN PERMISSION BY OWNER PRIOR TO CONSTRUCTION.
4. ITEMS MARKED "(UNUSED)" WERE IDENTIFIED AS SUCH BY STATION OPERATOR. THESE SHALL BE FIELD-VERIFIED AND REMOVED PER SHEET 43-C04, NOTE #4.
5. ALL UNUSED CONDUIT AND CABLING SHALL BE REMOVED PER SPECIAL PROVISION SECTION 16000.
6. ALL EQUIPMENT MAY NOT BE SHOWN.

LEGEND:

- TO REMAIN
- REMOVE PRE-CONSTRUCTION
- REMOVE/RELOCATE DURING CONSTRUCTION
- CONDUIT STUB-UP

KEY NOTES:

1. EXISTING CT CABINET. COORDINATE WITH ENTERGY. ONE EXISTING SERVICE MUST REMAIN ENERGIZED UNTIL ALL NEW EQUIPMENT IS INSTALLED.
2. EXISTING SWITCHGEAR.
3. EXISTING NC FLOW METER (UNUSED).
4. EXISTING LIGHTING DISTRIBUTION PANEL "D43".
5. EXISTING BUBBLER/PLC CONTROLS PANEL.
6. EXISTING BLOWER CONTROL.
7. EXISTING BLOWER 1.
8. EXISTING 30 KVA XFMR.
9. EXISTING LOW VOLTAGE DISTRIBUTION PANEL "B43".
10. EXISTING BLOWER 2 PANEL (UNUSED).
11. EXISTING SEAL WATER PUMP (UNUSED).
12. EXISTING SEAL WATER CONTROL PANEL (UNUSED).
13. EXISTING AIR RELEASE VALVE.
14. EXISTING VFD-1.
15. EXISTING VFD-2.
16. EXISTING VFD-3.
17. EXISTING VFD-4.
18. EXISTING VFD-5.
19. EXISTING PUMP MOTOR 1.
20. EXISTING PUMP MOTOR 2.
21. EXISTING PUMP MOTOR 3.
22. EXISTING PUMP MOTOR 4.
23. EXISTING PUMP MOTOR 5.
24. EXISTING PUMP 1.
25. EXISTING PUMP 2.
26. EXISTING PUMP 3.
27. EXISTING PUMP 4.
28. EXISTING PUMP 5.
29. BLOWER INTAKE.
30. EXISTING SINK.
31. EXISTING BUBBLER TUBE TO WET WELL.
32. TO OUTSIDE LIGHTING.
33. TO CHEMICAL INJECTION SITE (UNUSED).
34. EXISTING JUNCTION BOX.
35. TO WET WELL (SUMP PUMP DISCHARGE).
36. EXISTING WING WALLS.
37. WALL TO BE REMOVED FOR NEW 8' WIDE DOUBLE DOOR.
38. EXISTING LIGHTING TYP.
39. SUMP PUMP.

STATE OF LOUISIANA
DERRICK S. DUDEAU
REG. NO. 33288
REGISTERED PROFESSIONAL ENGINEER
ELECTRICAL ENGINEERING
6/23/16

NO.	DATE	REVISION DESCRIPTION	BY
3	6/24/16	REVISED PER ADDENDUM NO. 3	K.B.

DESIGNED K. BLACKBURN
CHECKED D. GOUDEAU
DETAILED D. SMITH
CHECKED M. EDWARDS
DATE MARCH 2016
SHEET

PARISH EAST BATON ROUGE
CITY BATON ROUGE
PROJECT 11-PS-MS-0035
SHT. 43-E02R

MULTIPLE PUMP STATIONS HIGHWAY 61 - PLANK ROAD (AREA NFW-C-0009)

ELECTRICAL DEMOLITION PLAN
PUMP STATION NO. 43

GEC Gulf Engineers & Consultants

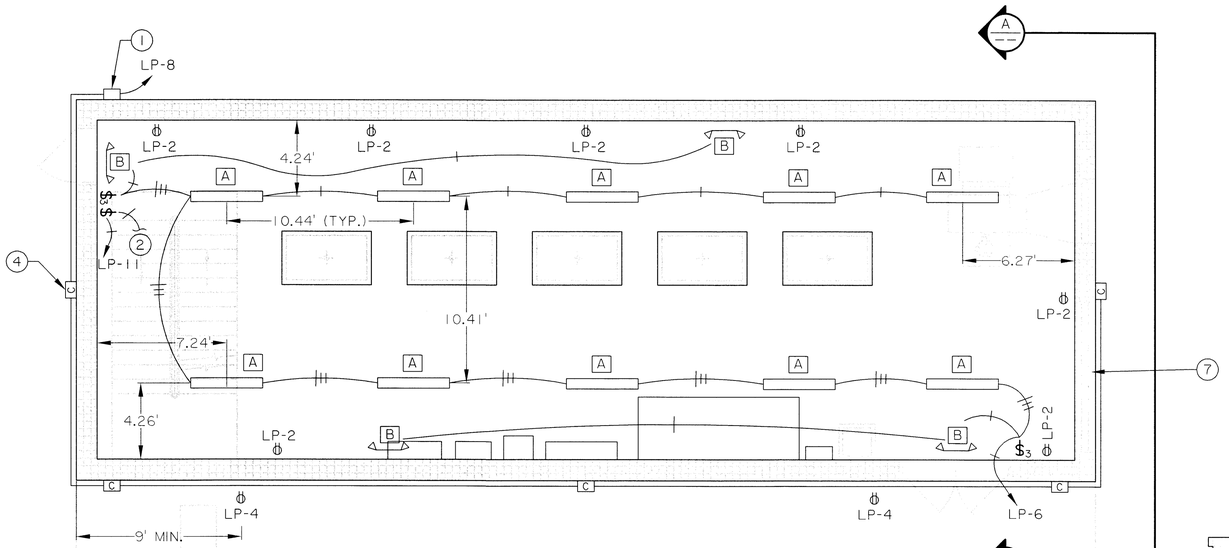

1 RECEPTACLE AND LIGHTING FLOOR PLAN - CONTROL ROOM
SCALE: 1" = 4'

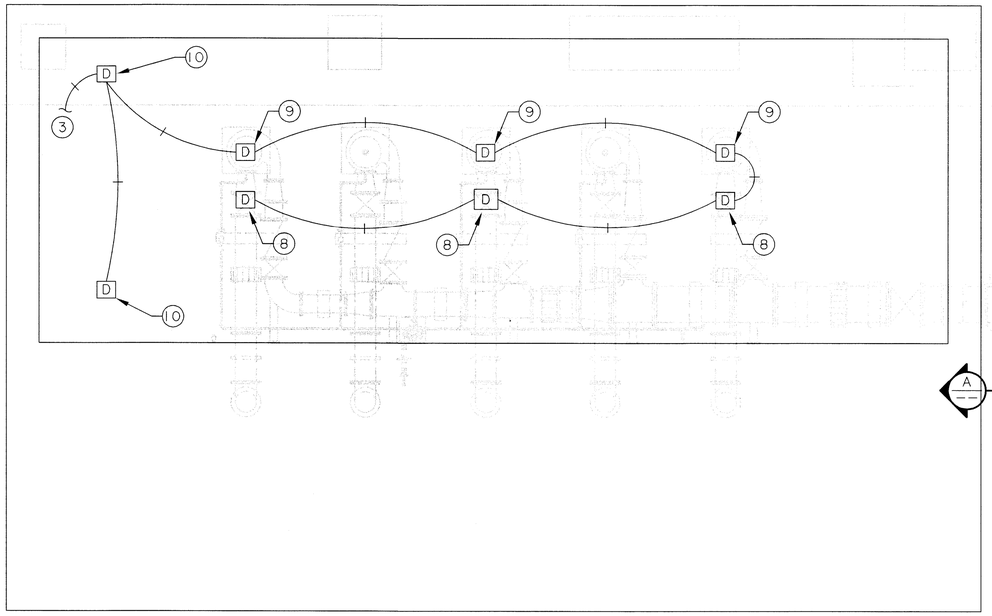

2 LIGHTING FLOOR PLAN - DRY WELL
SCALE: 1" = 4'

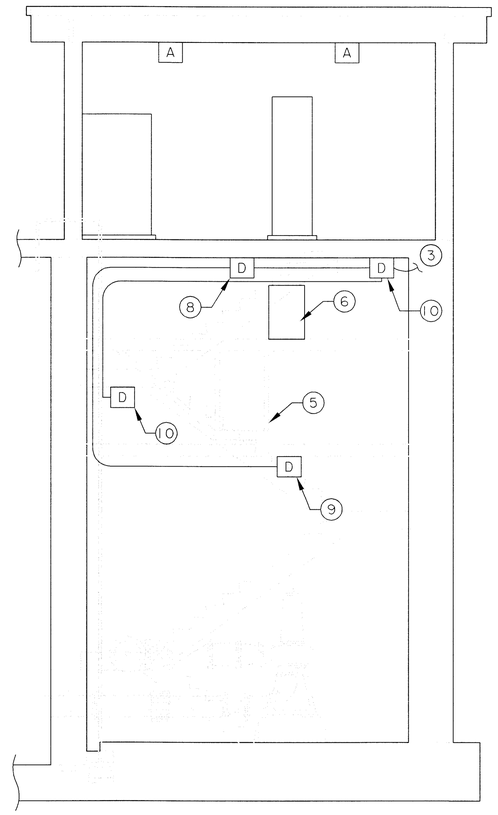

A LIGHTING ELEVATION
SCALE: 1" = 4'

PLAN NOTES:

1. ALL 20A CIRCUITS SHALL UTILIZE 2#12, 1#12G., 3/4"C. UNLESS NOTED OTHERWISE.
2. SEE SHEET 43-E04 & 43-E05 FOR CONDUIT ROUTING.
3. CIRCUIT EXIT AND EMERGENCY LIGHTS AHEAD OF LOCAL SWITCHING.
4. COORDINATE ALL UNDERGROUND CONDUIT ROUTING AND STUB-UP ASSOCIATED WITH ALL ELECTRICAL EQUIPMENT WITH VENDOR SHOP DRAWINGS PRIOR TO INSTALLATION.
5. SEE 43-E02R, 43-E11 TO 43-E13 FOR INSTALLATION DEMOLITION AND EXISTING EQUIPMENT NOTES.
6. ALL EXTERIOR RECEPTACLES REQUIRED TO BE GFCI (GROUND FAULT CIRCUIT INTERRUPTERS).
7. ALL EQUIPMENT MAY NOT BE SHOWN.
8. ALL DRIVES ABOVE 150 HP SHALL BE FREE STANDING, 18 PWM TYPE. DRIVES SHALL MEET IEEE 519-2014 HARMONIC DISTORTION LIMITS AT THE MCC BUS WHEN ALL DUTY PUMPS ARE RUNNING ON UTILITY AND GENERATOR.

KEY NOTES:

1. NEW PHOTOCELL FOR EXTERIOR LIGHTING AIMED NORTH (TYP. 1).
2. RE: LOWER LEVEL FOR CONTINUATION.
3. RE: UPPER LEVEL FOR CONTINUATION.
4. WALLPAK "C" TO BE MOUNTED 12'-0" ABOVE FINISHED GRADE. (TYP.)
5. MOUNTING SURFACE IS UNDERSIDE OF CATWALK.
6. TERMINAL JUNCTION BOX (TYP. OF 5) REFER TO SHEET 43-E14 FOR DETAILS.
7. CONDUIT TO BE RUN AROUND 8' WIDE DOUBLE DOOR.
8. MOUNTED ON CEILING.
9. MOUNTED ON STRUCTURAL SUPPORT BEAM.
10. MOUNTED ON STAIR LANDING BELOW.

LIGHT FIXTURE SCHEDULE

FIXTURE SYMBOL	QTY	FIXTURE TYPE	NO. & TYPE OF LAMPS	VOLTS	MOUNTING	CATALOG NUMBER
A	10	VAPORLUME STRIP	(2) 32WT8	120	SURFACE	DAY-BRITE #DWAE232-UNV-1/2-EB
B	2	EMER LIGHT	(2) HALOGEN/LED	120	SURFACE	MCPHILBEN #VCRW
C	5	WALL PAK	(1) 250W HPS	120	WALL	NITE BRITES #WLL250SMT-LP
D	8	VANTAGE MINI	(1) 150W HPS	120	SURFACE	HOLOPHANE #VU15DHP00XXX

ALL LIGHT FIXTURES AS SPECIFIED OR APPROVED EQUAL.
* INCLUDE PHOTOCELL ON EACH LIGHT.

STATE OF LOUISIANA
DERRICK S. GOUDEAU
REG. No. 32288
REGISTERED PROFESSIONAL ENGINEER IN ELECTRICAL ENGINEERING
6/23/16

SHT. 43-E03R
PARISH: EAST BATON ROUGE
CITY: BATON ROUGE
PROJECT: 11-PS-MS-0035
DESIGNED: K. BLACKBURN
CHECKED: D. GOUDEAU
DETAILED: D. SMITH
CHECKED: M. EDWARDS
DATE: MARCH 2016
SHEET: K.B.
BY:

NO.	DATE	REVISION DESCRIPTION
1	6/24/16	REVISED PER ADDENDUM NO. 3

MULTIPLE PUMP STATIONS HIGHWAY 61 - PLANK ROAD (AREA NFW-C-0009)
CONTROL BUILDING RECEPTACLE & LIGHTING FLOOR PLANS
PUMP STATION NO. 43

GEC Gulf Engineers & Consultants

PLAN NOTES:

1. THIS SHEET DOES NOT NECESSARILY DEPICT ROUTING FOR ALL REQUIRED CONDUIT. REFER TO SHEET 43-E07, 43-E08 FOR CONDUIT/CONDUCTOR SCHEDULE.
2. COORDINATE ALL UNDERGROUND CONDUIT ROUTING AND STUB-UPS ASSOCIATED WITH ALL ELECTRICAL EQUIPMENT WITH VENDOR SHOP DRAWINGS PRIOR TO INSTALLATION.
3. EXACT CONDUIT ROUTING TO BE DETERMINED BY CONTRACTOR, REQUIRED CONNECTIONS ARE SHOWN DIAGRAMMATICALLY.
4. HOUSE KEEPING PAD SHALL BE CONSTRUCTED PRIOR TO INSTALLATION OF ALL FLOOR MOUNTED ELECTRICAL EQUIPMENT. SEE SPECS SECTION 01014.
5. TJB LOCATED IN DRY WELL. SEE SHEET 43-E05 FOR CONTINUATION.
6. ⊠ INDICATES CONDUIT STUP-UP IN VFD. LOCATION HAS BEEN CHOSEN TO COORDINATE WITH EXISTING FLOOR PENETRATIONS. CONTRACTOR SHALL SPECIFY STUP-UP LOCATION UPON ORDERING VFD TO AVOID UNNECESSARY FLOOR PENETRATIONS.
7. SEE CONSTRUCTION SEQUENCE OF WORK, SPEC SECTION 01014 AND 43-E02, 43-E11 TO 43-E13 FOR INSTALLATION, DEMOLITION AND EXISTING EQUIPMENT NOTES. MAINTAIN MINIMUM WORKING CLEARANCE PER NEC 110.26 THROUGHOUT CONSTRUCTION AS WELL AS FOR FINAL CONFIGURATION.
8. ALL DRIVES ABOVE 150 HP SHALL BE FREE STANDING, 18 PWM TYPE. DRIVES SHALL MEET IEEE 519-2014 HARMONIC DISTORTION LIMITS AT THE MCC BUS WHEN ALL DUTY PUMPS ARE RUNNING ON UTILITY AND GENERATOR.
9. EXTEND EXISTING HOUSEKEEPING PAD TO ACCOMMODATE NEW EQUIPMENT (NOT SHOWN FOR CLARITY). (1)

LEGEND:

PT - OUTLET PRESSURE TRANSMITTER
CV - CHECK VALVE SENSOR
PS - HI PRESSURE SWITCH
MMP - MOTOR MONITOR PANEL
CGD - COMBUSTIBLE GAS DETECTOR
BL - BLUE LIGHT
RL - RED LIGHT
YL - YELLOW LIGHT
TJB - TERMINAL JUNCTION BOX

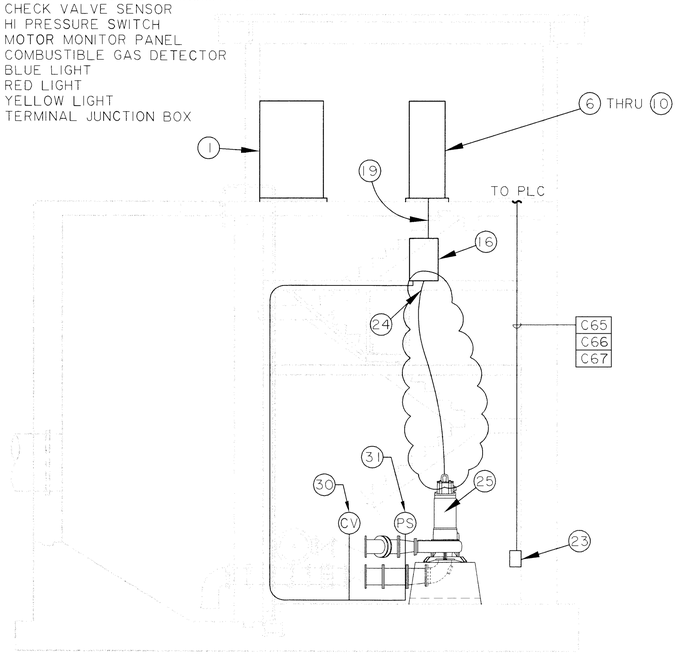

KEY NOTES:

1. NEW MAIN SWITCHBOARD 'MSA'.
2. NEW PANEL 'LP' 120/240V, 1 ϕ, 3W.
3. NEW TRANSFORMER 'TLA', 480:240/120V., 37.5KVA, 1 ϕ.;
4. NEW STATION MASTER PLC CABINET.
5. NEW BUBBLER PANEL.
6. NEW 150HP VFD 18WM VFD-05-01.
7. NEW 150HP VFD 18WM VFD-05-02.
8. NEW 150HP VFD 18WM VFD-05-03.
9. NEW 150HP VFD 18WM VFD-05-04.
10. NEW 150HP VFD 18WM VFD-05-05.
11. NEW MOTOR MONITOR PANEL. (MMP).
12. EXISTING EXHAUST FAN. (TO REMAIN) RECONNECT LEADS FOR 480V 3ϕ OPERATION.
13. (1) BUBBLER TUBE TO WET WELL IN 1¼" CONDUIT.
14. NEW METER SOCKET, CUSTOMER LUG BOX AND CT CABINET PER ENTERGY REQUIREMENTS.
15. NOT USED.
16. NEW TJB FOR POWER AND CONTROLS (TYP. 1 OF 5).
17. SECONDARY CONDUIT & CONDUCTORS BY CONTRACTOR, TO ENTERGY POLE MOUNTED UTILITY TRANSFORMER; ENTERGY SHALL CONNECT CONDUCTORS TO UTILITY TRANSFORMER SECONDARY BUSHINGS. RE: E-01 ELECTRICAL SITE PLAN FOR CONTINUATION.
18. (1) TO GENERATORS (SOURCE) RE: 43-E01 ELECTRICAL SITE PLAN FOR CONTINUATION.
19. TO TJB FOR PUMPS P-05-01 THRU P-05-05.
20. TO ODOR CONTROL SYSTEM (POWER) RE: 43-E01 ELECTRICAL SITE PLAN FOR CONTINUATION.
21. TO SUMP PUMP.
22. TO OUTLET FLOW METER.
23. COMBUSTIBLE GAS DETECTOR AND TRANSMITTER WIRED DIRECTLY TO CONTROL PANEL. SMALL PANEL BOX TO CONTAIN CGD TRANSMITTER.
24. PROVIDE CORD GRIP FOR STRAIN RELIEF. SUPPORT FROM STRUCTURAL STEEL.
25. NEW PUMP AND MOTOR (TYP. 1 OF 5).
26. TO ODOR CONTROL SYSTEM (ALARMS) RE: 43-E01 ELECTRICAL SITE PLAN FOR CONTINUATION.
27. (1) TO GENERATORS (STATUS) RE: 43-E01 ELECTRICAL SITE PLAN FOR CONTINUATION.
28. MOUNTED UNDER ROOF OVERHANG.
29. (1) TO GENERATORS (AUX. LOADS) RE: 43-E01 ELECTRICAL SITE PLAN FOR CONTINUATION.
30. LIMIT SWITCH ON EXISTING CHECK VALVE (TYP. 1 OF 5).
31. NEW PRESSURE SWITCH ON NEW DISCHARGE PIPING (TYP. 1 OF 5).
32. NEW MOTOR RATED NON-FUSED DISCONNECT SWITCH.
33. EXISTING CT CABINETS.

(A/--) CONDUIT ROUTING ELEVATION

SCALE: 1" = 5'

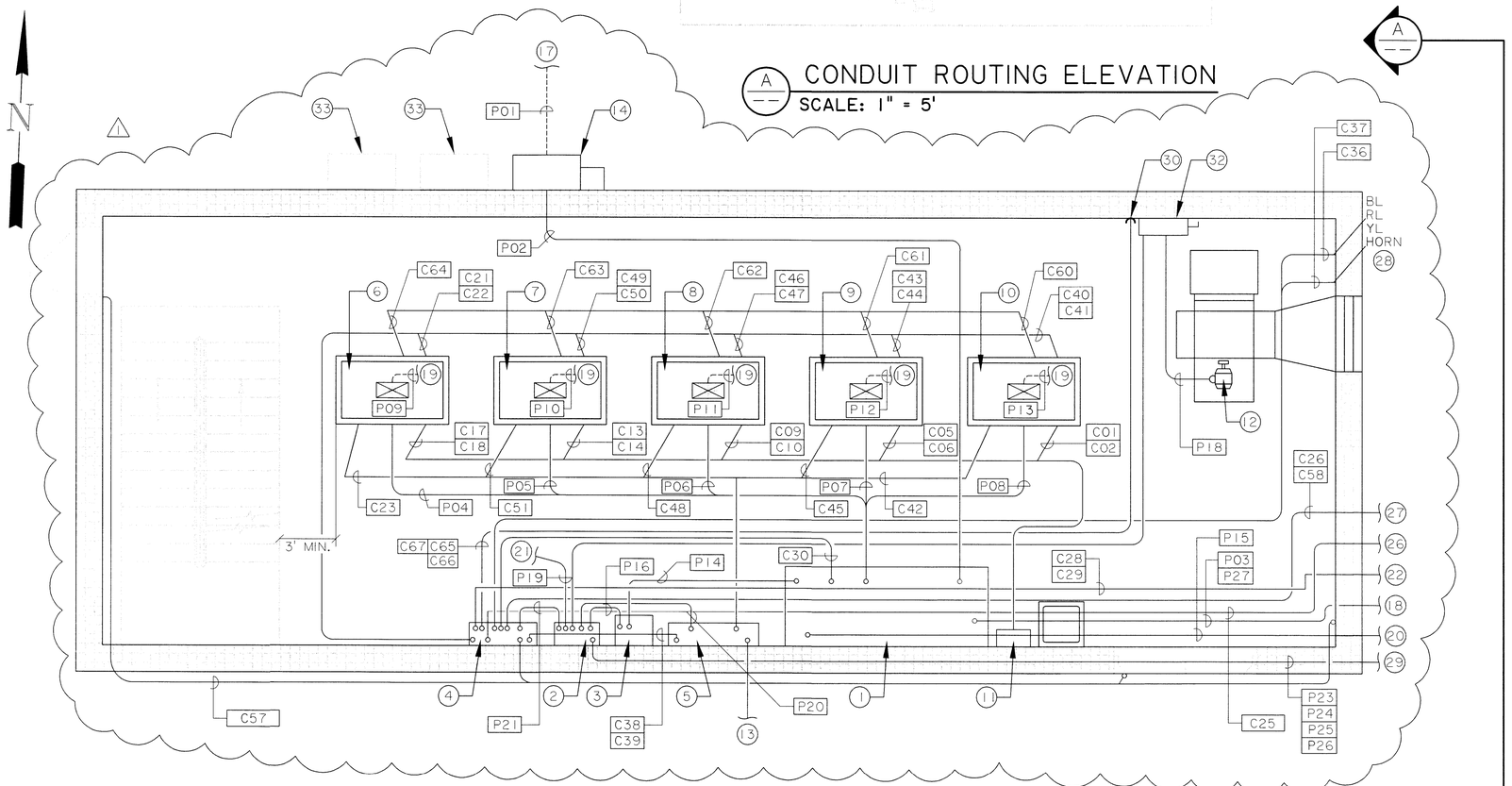

(1) CONDUIT ROUTING - POWER AND CONTROLS - CONTROL ROOM

SCALE: 1" = 3'

SHT.	43-E04R
PARISH	EAST BATON ROUGE
CITY	BATON ROUGE
PROJECT	11-PS-MS-0035
DESIGNED	K. BLACKBURN
CHECKED	D. GOUDEAU
DETAILED	D. SMITH
CHECKED	D. ROSHTO
DATE	MARCH 2016
SHEET	

NO.	DATE	REVISION DESCRIPTION	BY
1	6/24/16	REVISED PER ADDENDUM NO. 3	K.B.

MULTIPLE PUMP STATIONS HIGHWAY 61 - PLANK ROAD (AREA NFW-C-0009)

CONTROL BUILDING CONDUIT ROUTING FLOOR PLAN
PUMP STATION NO. 43

STATE OF LOUISIANA
DERRICK S. GOUDEAU
REG. No. 32,968
REGISTERED
PROFESSIONAL ENGINEER
6/23/16

GEC Gulf Engineers & Consultants

⚠ PLAN NOTES:

1. THIS SHEET DOES NOT NECESSARILY DEPICT ROUTING FOR ALL REQUIRED CONDUIT. REFER TO SHEET 43-E07 AND 43-E08 FOR CONDUIT/CONDUCTOR SCHEDULE.
2. CONDUIT ROUTING SHOWN IS FOR INFORMATION ONLY. VERIFY FINAL CONDUITS LOCATIONS PRIOR TO INSTALLATION. POWER AND CONTROLS CONDUIT AND CONDUCTORS SHALL BE TERMINATED AT DEVICE J-BOXES AS REQUIRED.
3. INSTALL NEW REPLACEMENT PRESSURE TRANSMITTER PT-05-19 IN EXISTING TAP OF VERTICAL OUTLET PIPE.
4. TERMINAL JUNCTION BOX (TJB) SHALL BE ACCESSIBLE FROM CATWALK RAIL ABOVE SUBMERSIBLE PUMPS. ALL CABLES FROM SUBMERSIBLE PUMP ARE TO TERMINATE IN TJB. REFER TO STRUCTURAL DRAWINGS.
5. COMBUSTIBLE GAS DETECTOR MOUNTED AT LEAST 5 FT. ABOVE GROUND.
6. VFD IS LOCATED ON GROUND FLOOR ABOVE PUMP & TJB.
7. OUTLET PRESSURE SWITCH AND CHECK VALVE SENSOR CABLES SHALL TRANSITION TO CONDUIT AND RUN TO THE RESPECTIVE TJB. PUMP POWER CABLES SHALL BE RUN DIRECTLY TO THE TJB FROM THE RESPECTIVE PUMP. (RE: 43-E05 ELEVATION "A")
8. ALL CONDUIT IN DRY WELL SHALL BE PVC COATED RGS TYPE, UNLESS OTHERWISE NOTED.
9. UTILIZE STAINLESS STEEL UNISTRUT, CONDUIT CLAMPS AND ALL HARDWARE, ETC. FOR CONDUIT MOUNTING AND/OR SUPPORT EXCEPT WHERE IN DIRECT CONTACT WITH PVC COATED RGS CONDUIT IN WHICH CASE PVC COATED MATERIALS SHALL BE USED.
10. UTILIZE CONDUIT SUPPORTS ON DRY WELL WALLS, CEILING AND FLOOR AS REQUIRED.

LEGEND:

PT - PRESSURE TRANSMITTER
CV - CHECK VALVE SENSOR
PS - HI PRESSURE SWITCH
MMP - MOTOR MONITOR PANEL
CGD - COMBUSTIBLE GAS DETECTOR
TJB - TERMINAL JUNCTION BOX

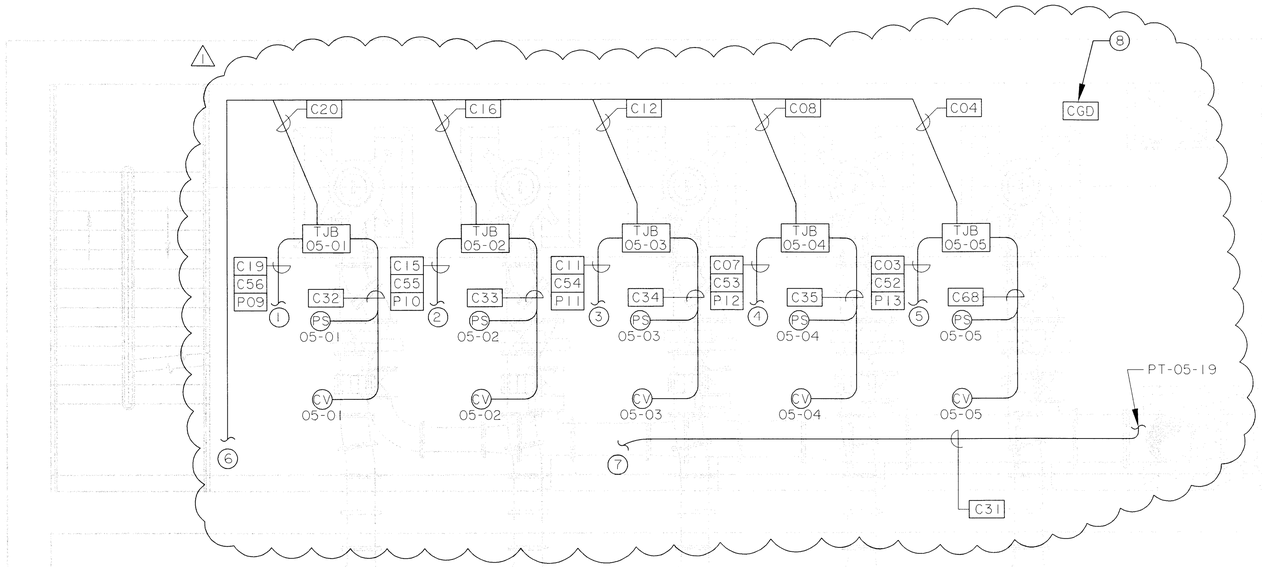

⚠ KEY NOTES:

1. TO VFD-05-01. (LOCATED ON GROUND FLOOR).
2. TO VFD-05-02. (LOCATED ON GROUND FLOOR).
3. TO VFD-05-03. (LOCATED ON GROUND FLOOR).
4. TO VFD-05-04. (LOCATED ON GROUND FLOOR).
5. TO VFD-05-05. (LOCATED ON GROUND FLOOR).
6. TO MOTOR MONITOR PANEL. (LOCATED ON GROUND FLOOR).
7. TO PLC. (LOCATED ON GROUND FLOOR)
8. CGD PANEL BOX WITH CGD TRANSMITTER AND SENSOR.

1 CONDUIT ROUTING - POWER AND CONTROLS - DRY WELL
SCALE: 1" = 3'

STATE OF LOUISIANA
DERRICK S. GOUDEAU
PE No. 33288
REGISTERED PROFESSIONAL ENGINEER
IN ELECTRICAL ENGINEERING
6/23/16

NO.	DATE	REVISION DESCRIPTION	BY
1	6/24/16	REVISED PER ADDENDUM NO. 3	

DESIGNED K. BLACKBURN
CHECKED D. GOUDEAU
DETAILED D. SMITH
CHECKED D. ROSHTO
DATE MARCH 2016
SHEET

PARISH EAST BATON ROUGE
CITY BATON ROUGE
PROJECT 11-PS-MS-0035

SHT. 43-E05R

MULTIPLE PUMP STATIONS HIGHWAY 61 - PLANK ROAD
(AREA NFW-C-0009)

CONTROL BUILDING CONDUIT ROUTING FLOOR PLAN
PUMP STATION NO. 43

GEC Gulf Engineers & Consultants

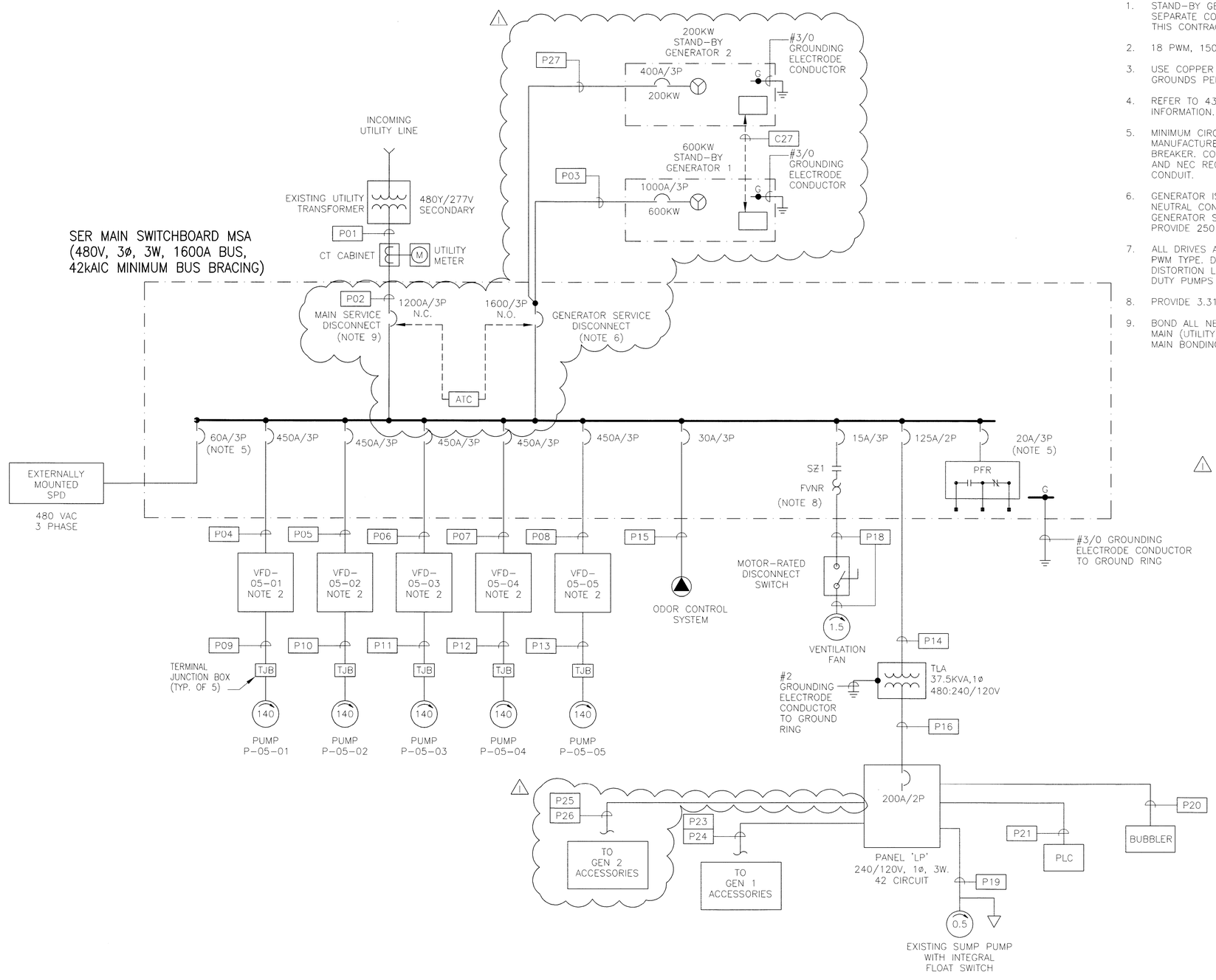

1 ONE LINE DIAGRAM
N.T.S.

NOTES:

1. STAND-BY GENERATORS WILL BE FURNISHED UNDER SEPARATE CONTRACT. INSTALLED BY CONTRACTOR UNDER THIS CONTRACT. SEE SPEC SECTION 01650.
2. 18 PWM, 150HP VFD W/ AC INCLUDED IN UNIT.
3. USE COPPER GROUND WIRE ONLY FOR ALL EQUIPMENT GROUNDS PER SPECS.
4. REFER TO 43-E11 TO 43-E13 FOR AS-BUILT ELECTRICAL INFORMATION.
5. MINIMUM CIRCUIT BREAKER SHOWN. REFER TO SPD MANUFACTURER REQUIREMENTS FOR REQUIRED CIRCUIT BREAKER. CONDUIT AND CONDUCTOR PER MANUFACTURER AND NEC REQUIREMENTS. MINIMUM #6 CONDUCTORS IN 1" CONDUIT.
6. GENERATOR IS SEPARATELY DERIVED SOURCE. BOND ALL NEUTRAL CONDUCTORS ON SOLID NEUTRAL BUS IN GENERATOR SERVICE DISCONNECT CIRCUIT BREAKER AND PROVIDE 250 KCMIL SYSTEM BONDING JUMPER.
7. ALL DRIVES ABOVE 150 HP SHALL BE FREE STANDING, 18 PWM TYPE. DRIVES SHALL MEET IEEE 519-2014 HARMONIC DISTORTION LIMITS AT THE SWITCHBOARD BUS WHEN ALL DUTY PUMPS ARE RUNNING ON UTILITY AND GENERATOR.
8. PROVIDE 3.31A OVERLOAD FOR EXISTING VENTILATION FAN.
9. BOND ALL NEUTRAL CONDUCTORS ON SOLID NEUTRAL BUS IN MAIN (UTILITY) SERVICE DISCONNECT AND PROVIDE #4/0 AWG MAIN BONDING JUMPER.

LEGEND:

VFD = VARIABLE FREQUENCY DRIVE
PFR = PHASE FAILURE RELAY
ATC = AUTOMATIC TRANSFER CONTROLLER
SPD = SURGE PROTECTIVE DEVICE
SER = SERVICE ENTRANCE RATED
N.O. = NORMALLY OPENED
N.C. = NORMALLY CLOSED

STATE OF LOUISIANA
DERRICK S. GOUDEAU
REG. No. 33288
REGISTERED
PROFESSIONAL ENGINEER
ELECTRICAL ENGINEER
6/23/16

SHT. 43-E06R
PARISH: EAST BATON ROUGE
CITY: BATON ROUGE
PROJECT: 11-PS-MS-0035
DESIGNED: K. BLACKBURN
CHECKED: D. GOUDEAU
DETAILED: D. SMITH
CHECKED: M. EDWARDS
DATE: MARCH 2016
SHEET: K.B.
BY:

NO.	DATE	REVISION DESCRIPTION
3	6/24/16	REVISED PER ADDENDUM NO. 3

MULTIPLE PUMP STATIONS HIGHWAY 61 – PLANK ROAD
(AREA NFW-C-0009)
ONE-LINE DIAGRAM
PUMP STATION NO. 43

GEC
Gulf Engineers & Consultants

CONDUIT AND CONDUCTOR SCHEDULE - POWER

TAG	QTY	CONDUIT SIZE	PHASE CONDUCTOR NUMBER/SIZE	NEUTRAL CONDUCTOR NUMBER/SIZE	GROUND CONDUCTOR NUMBER/SIZE	RUN DESCRIPTION	COMMENTS
P01	3	4"	(3) - 500 KCMIL	(1) - 500 KCMIL	-	UTILITY TRANSFORMER TO CT CABINET	NEW CONDUIT AND NEW CONDUCTORS
P02	3	4"	(3) - 500 KCMIL	(1) - 500 KCMIL	(1) - #3/0	MAIN SERVICE FEEDER TO MSA FROM CT CABINET	NEW FEED FROM NEW CT CABINET
P03	3	4"	(3) - 500 KCMIL	(1) - 500 KCMIL	(1) - #3/0	FEEDER TO MSA FROM GENERATOR 1 (600KW)	-
P04	1	3"	(3) - #3/0	-	(1) - #4	FEEDER TO VFD-05-01 FROM MSA	-
P05	1	3"	(3) - #3/0	-	(1) - #4	FEEDER TO VFD-05-02 FROM MSA	-
P06	1	3"	(3) - #3/0	-	(1) - #4	FEEDER TO VFD-05-03 FROM MSA	-
P07	1	3"	(3) - #3/0	-	(1) - #4	FEEDER TO VFD-05-04 FROM MSA	-
P08	1	3"	(3) - #3/0	-	(1) - #4	FEEDER TO VFD-05-05 FROM MSA	-
P09	1	3"	(3) - #3/0	-	(1) - #4	FEEDER TO P-05-01 FROM VFD-05-01	VIA TJB-05-01
P10	1	3"	(3) - #3/0	-	(1) - #4	FEEDER TO P-05-02 FROM VFD-05-02	VIA TJB-05-02
P11	1	3"	(3) - #3/0	-	(1) - #4	FEEDER TO P-05-03 FROM VFD-05-03	VIA TJB-05-03
P12	1	3"	(3) - #3/0	-	(1) - #4	FEEDER TO P-05-04 FROM VFD-05-04	VIA TJB-05-04
P13	1	3"	(3) - #3/0	-	(1) - #4	FEEDER TO P-05-05 FROM VFD-05-05	VIA TJB-05-05
P14	1	1.5"	(2) - #4	-	(1) - #6	FEEDER TO XFRMR TLA FROM MSA	-
P15	1	1"	(3) - #10	-	(1) - #10	FEEDER TO ODOR CONTROL SYSTEM FROM MSA	-
P16	1	2.5"	(2) - #2	(1) - #1/0	(1) - #4	FEEDER TO PANEL 'LP' FROM XFRMR TLA	-
P17	-	-	-	-	-	NOT USED	-
P18	1	1"	(1) - #8	(1) - #8	(1) - #8	FEEDER TO EXHAUST FAN AND DISCONNECT FROM PANEL 'LP'	-
P19	1	1"	(1) - #8	-	(1) - #8	FEEDER TO SUMP PUMP FROM PANEL 'LP'	EXISTING SUMP PUMP
P20	1	1"	(1) - #12	(1) - #12	(1) - #12	FEEDER TO BUBBLER FROM PANEL 'LP'	120VAC TO BUBBLER
P21	1	1"	(1) - #12	(1) - #12	(1) - #12	FEEDER TO PLC FROM PANEL 'LP'	120VAC TO PLC
P22	-	-	-	-	-	NOT USED	-
P23	1	¾"	(2) - #8	-	(1) - #8	FEEDER TO GENERATOR 1 BLOCK HTR FROM PANEL 'LP'	-
P24	1	¾"	(1) - #12	(1) - #12	(1) - #12	FEEDER TO GENERATOR 1 BATT CHGR FROM PANEL 'LP'	-
P25	1	¾"	(2) - #8	-	(1) - #8	FEEDER TO GENERATOR 2 BLOCK HTR FROM PANEL 'LP'	-
P26	1	¾"	(1) - #12	(1) - #12	(1) - #12	FEEDER TO GENERATOR 2 BATT CHGR FROM PANEL 'LP'	-
P27	1	4"	(3) - 500 KCMIL	(1) - 500 KCMIL	(1) - #3	FEEDER TO MSA FROM GENERATOR 2 (200KW)	-

STATE OF LOUISIANA
DERRICK S. GOUDEAU
REG. No. 33288
REGISTERED
PROFESSIONAL ENGINEER
CIVIL ENGINEER
6/23/16

SHT. 43-E07R

PARISH: EAST BATON ROUGE
CITY: BATON ROUGE
PROJECT: 11-PS-MS-0035

DESIGNED: K. BLACKBURN
CHECKED: D. GOUDEAU
DETAILED: D. SMITH
CHECKED: M. EDWARDS
DATE: MARCH 2016
SHEET:

NO.	DATE	REVISION DESCRIPTION	BY
1	6/24/16	REVISED PER ADDENDUM NO. 3	K.B.

PUBLIC WORKS

MULTIPLE PUMP STATIONS, HIGHWAY 61 - PLANK ROAD
(AREA NFW-C-0009)

CONDUIT AND CONDUCTOR SCHEDULE - POWER
PUMP STATION NO. 43

GEC
Gulf Engineers & Consultants

CONDUIT AND CONDUCTOR SCHEDULE - CONTROLS

TAG	QTY	CONDUIT SIZE	CONDUCTOR NUMBER/SIZE	RUN DESCRIPTION	COMMENTS
C01	1	¾"	10#16	FROM: MOTOR MONITOR PANEL TO: VFD-05-05	ALARM CONTACTS 05-05
C02	1	¾"	3#16	FROM: VFD-05-05 TO: MOTOR MONITOR PANEL	CONTROL POWER
C03	1	¾"	4#16	FROM: VFD-05-05 TO: TERMINAL JUNCTION BOX	CHECK VALVE AND HIGH PRESSURE SWITCH
C04	1	1"	3#16 STP	FROM: MOTOR MONITOR PANEL TO: TERMINAL JUNCTION BOX 05-05	MOTOR MONITOR SENSOR
C05	1	¾"	10#16	FROM: MOTOR MONITOR PANEL TO: VFD-05-04	ALARM CONTACTS 05-04
C06	1	¾"	3#16	FROM: VFD-05-04 TO: MOTOR MONITOR PANEL	CONTROL POWER
C07	1	¾"	4#16	FROM: VFD-05-04 TO: TERMINAL JUNCTION BOX	CHECK VALVE AND HIGH PRESSURE SWITCH
C08	1	1"	3#16 STP	FROM: MOTOR MONITOR PANEL TO: TERMINAL JUNCTION BOX 05-04	MOTOR MONITOR SENSOR
C09	1	¾"	10#16	FROM: MOTOR MONITOR PANEL TO: VFD-05-03	ALARM CONTACTS 05-03
C10	1	¾"	3#16	FROM: VFD-05-03 TO: MOTOR MONITOR PANEL	CONTROL POWER
C11	1	¾"	4#16	FROM: VFD-05-03 TO: TERMINAL JUNCTION BOX	CHECK VALVE AND HIGH PRESSURE SWITCH
C12	1	1"	3#16 STP	FROM: MOTOR MONITOR PANEL TO: TERMINAL JUNCTION BOX 05-03	MOTOR MONITOR SENSOR
C13	1	¾"	10#16	FROM: MOTOR MONITOR PANEL TO: VFD-05-02	ALARM CONTACTS 05-02
C14	1	¾"	3#16	FROM: VFD-05-02 TO: MOTOR MONITOR PANEL	CONTROL POWER
C15	1	¾"	4#16	FROM: VFD-05-02 TO: TERMINAL JUNCTION BOX	CHECK VALVE AND HIGH PRESSURE SWITCH
C16	1	1"	3#16 STP	FROM: MOTOR MONITOR PANEL TO: TERMINAL JUNCTION BOX 05-02	MOTOR MONITOR SENSOR
C17	1	¾"	10#16	FROM: MOTOR MONITOR PANEL TO: VFD-05-01	ALARM CONTACTS 05-01
C18	1	¾"	3#16	FROM: VFD-05-01 TO: MOTOR MONITOR PANEL	CONTROL POWER
C19	1	¾"	4#16	FROM: VFD-05-01 TO: TERMINAL JUNCTION BOX	CHECK VALVE AND HIGH PRESSURE SWITCH
C20	1	1"	3#16 STP	FROM: MOTOR MONITOR PANEL TO: TERMINAL JUNCTION BOX 05-01	MOTOR MONITOR SENSOR
C21	1	1"	16#16	FROM: VFD-05-01 TO: PLC	DIGITAL STATUS & ALARMS RUN, STOP, FAULT, ETC., FIELD SWITCH
C22	1	1"	3#16 STP	FROM: VFD-05-01 TO: PLC	ANALOG/TWISTED SHIELDED PAIR, SPEED SIGNALS AND AMPS
C23	1	¾"	2#16	FROM: VFD-05-01 TO: BUBBLER/ECS	EMERGENCY RUN
C24	-	-	-	NOT USED	-
C25	1	¾"	2#16	FROM: PLC TO: ODOR CONTROL PANEL	ALARM CONTACTS
C26	1	1"	16#16	FROM: GENERATOR 1 TO: PLC	GENERATOR STATUS
C27	1	¾"	2#16 STP	FROM: GENERATOR 1 TO: GENERATOR 2	CAN NETWORK
C28	1	¾"	2#16 STP	FROM: PLC TO: FLOW TRANSMITTER FT-05-19	TWISTED SHIELDED PAIR
C29	1	¾"	3#14 BLACK WHT. GR.	FROM: PLC TO: FLOW TRANSMITTER FT-05-19	FLOW TRANSMITTER POWER
C30	1	¾"	10#16	FROM: PLC TO: ATC	ATC STATUS AND ALARMS
C31	1	¾"	1 #16 STP	FROM: PLC TO: OUTLET PRESSURE TRANSMITTER PT-05-19	TWISTED SHIELDED PAIR
C32	1	¾"	4#16	FROM: CHECK VALVE 05-01,HIGH PRESSURE SWITCH 05-01 TO: TJB05-01	CHECK VALVE AND HIGH PRESSURE SWITCH CONTACT
C33	1	¾"	4#16	FROM: CHECK VALVE 05-02, HIGH PRESSURE SWITCH 05-02 TO: TJB05-02	CHECK VALVE AND HIGH PRESSURE SWITCH CONTACT
C34	1	¾"	4#16	FROM: CHECK VALVE 05-03, HIGH PRESSURE SWITCH 05-03 TO: TJB05-03	CHECK VALVE AND HIGH PRESSURE SWITCH CONTACT
C35	1	¾"	4#16	FROM: CHECK VALVE 05-04, HIGH PRESSURE SWITCH 05-04 TO: TJB05-04	CHECK VALVE AND HIGH PRESSURE SWITCH CONTACT
C36	1	1"	3#16 STP	FROM: PLC TO: EXTERNAL ALARMS	LIGHTS
C37	1	¾"	1#16 STP	FROM: PLC TO: EXTERNAL ALARMS	HORNS
C38	1	1"	12#16	FROM: PLC TO: BUBBLER/ECS	DIGITAL CONTACTS
C39	1	¾"	2#16 STP	FROM: PLC TO: BUBBLER/ECS	LEVEL TRANSMITTER ANALOG/TWISTED SHIELDED PAIR
C40	1	1"	16#16	FROM: VFD-05-05 TO: PLC	DIGITAL STATUS & ALARMS RUN, STOP, FAULT, ETC., FIELD SWITCH
C41	1	1"	3#16 STP	FROM: VFD-05-05 TO: PLC	ANALOG/TWISTED SHIELDED PAIR, SPEED SIGNALS AND AMPS
C42	1	¾"	2#16	FROM: VFD-05-05 TO: BUBBLER/ECS	EMERGENCY RUN
C43	1	1"	16#16	FROM: VFD-05-04 TO: PLC	DIGITAL STATUS & ALARMS RUN, STOP, FAULT, ETC., FIELD SWITCH
C44	1	1"	3#16 STP	FROM: VFD-05-04 TO: PLC	ANALOG/TWISTED SHIELDED PAIR, SPEED SIGNALS AND AMPS
C45	1	¾"	2#16	FROM: VFD-05-04 TO: BUBBLER/ECS	EMERGENCY RUN
C46	1	1"	16#16	FROM: VFD-05-03 TO: PLC	DIGITAL STATUS & ALARMS RUN, STOP, FAULT, ETC., FIELD SWITCH
C47	1	1"	3#16 STP	FROM: VFD-05-03 TO: PLC	ANALOG/TWISTED SHIELDED PAIR, SPEED SIGNALS AND AMPS
C48	1	¾"	2#16	FROM: VFD-05-03 TO: BUBBLER/ECS	EMERGENCY RUN
C49	1	1"	16#16	FROM: VFD-05-02 TO: PLC	DIGITAL STATUS & ALARMS RUN, STOP, FAULT, ETC., FIELD SWITCH
C50	1	1"	3#16 STP	FROM: VFD-05-02 TO: PLC	ANALOG/TWISTED SHIELDED PAIR, SPEED SIGNALS AND AMPS
C51	1	¾"	2#16	FROM: VFD-05-02 TO: BUBBLER/ECS	EMERGENCY RUN
C52	1	¾"	3#12	FROM: VFD-05-05 CPT TO: CONTROL DISCONNECT SWITCH IN FIELD (TJB-05-05)	-
C53	1	¾"	3#12	FROM: VFD-05-04 CPT TO: CONTROL DISCONNECT SWITCH IN FIELD (TJB-05-05)	-
C54	1	¾"	3#12	FROM: VFD-05-03 CPT TO: CONTROL DISCONNECT SWITCH IN FIELD (TJB-05-05)	-
C55	1	¾"	3#12	FROM: VFD-05-02 CPT TO: CONTROL DISCONNECT SWITCH IN FIELD (TJB-05-05)	-
C56	1	¾"	3#12	FROM: VFD-05-01 CPT TO: CONTROL DISCONNECT SWITCH IN FIELD (TJB-05-05)	-
C57	1	¾"	1#16 STP	FROM: PLC TO: ALL EXTERIOR DOORS	WIRED IN SERIES WITH MAGNETIC SWITCHES
C58	1	1"	16#16	FROM: GENERATOR 2 TO: PLC	GENERATOR STATUS
C59	-	-	-	NOT USED	-
C60	1	¾"	10#16	FROM: VFD-05 "NOT RUNNING" CONTACTS TO: VFD-01 THRU 04	BLOCK RUN CONTACTS
C61	1	¾"	10#16	FROM: VFD-04 "NOT RUNNING" CONTACTS TO: VFD-01 THRU 03, 05	BLOCK RUN CONTACTS
C62	1	¾"	10#16	FROM: VFD-03 "NOT RUNNING" CONTACTS TO: VFD-01, 02, 04, 05	BLOCK RUN CONTACTS
C63	1	¾"	10#16	FROM: VFD-02 "NOT RUNNING" CONTACTS TO: VFD-01, 03 THRU 05	BLOCK RUN CONTACTS
C64	1	¾"	10#16	FROM: VFD-01 "NOT RUNNING" CONTACTS TO: VFD-02 THRU 05	BLOCK RUN CONTACTS
C65	1	¾"	1#16 STP	FROM: PLC TO: AIT-05-01 LOWER LEVEL	CGD ANALOG
C66	1	¾"	6#16	FROM: PLC TO: AIT-05-01 LOWER LEVEL	CGD ALARM CONTROLS
C67	1	¾"	3#16	FROM: PLC TO: CGD LOWER LEVEL	CGD POWER
C68	1	¾"	4#16	FROM: CHECK VALVE 05-05, HIGH PRESSURE SWITCH 05-05 TO: TJB05-05	CHECK VALVE AND HIGH PRESSURE SWITCH CONTACT

STATE OF LOUISIANA
MICHAEL J. CHASSON
REG. No. 17978
REGISTERED PROFESSIONAL ENGINEER
6/23/16

SHT. 43-E08R

PARISH: EAST BATON ROUGE
CITY: BATON ROUGE
PROJECT: 11-PS-MS-0035

DESIGNED: K. BLACKBURN
CHECKED: D. GOUDEAU
DETAILED: D. SMITH
CHECKED: D. ROSHTO
DATE: MARCH 2016
SHEET:

NO.	DATE	REVISION DESCRIPTION	BY
3	6/24/16	REVISED PER ADDENDUM NO. 3	

MULTIPLE PUMP STATIONS HIGHWAY 61 – PLANK ROAD (AREA NFW-C-0009)

CONDUIT AND CONDUCTOR SCHEDULE – CONTROLS
PUMP STATION NO. 43

GEC Gulf Engineers & Consultants

PANEL NAME: LP

VOLTAGE:	120 / 240	MAIN BREAKER:	Y
PHASE:	1	LUGS ONLY:	N
WIRE:	3	SURFACE:	Y
BUS AMPS:	200 / 200 :MAIN CB AMPS	FLUSH:	N
SUPPLY AMPS:	230	GROUND BUS:	Y
MIN. SHORT CIRCUIT RATING:	10000	ISOLATED GROUND BUS:	N
INCLUDE SPARE CAP. - Y / N:	Y	NEUTRAL BUS:	Y

NOTES:

SERVES	LTG	RCPT	PWR	MOT	CB *	CKT	PH	CKT	CB *	LTG	RCPT	PWR	MOT	SERVES
BLOCK HTR (600KW)			2500		30/2	1	L1	2						SPACE
[			2500		[	3	L2	4	20/1		360			EXTERIOR RECEPTACLES
SUMP PUMP				1176	20/1	5	L1	6	20/1	800				INTERIOR LIGHTING - UPPER
BATT CHGR (600KW)			792		20/1	7	L2	8	20/1	1563				EXTERIOR LIGHTING
BUBBLER POWER			1200		20/1	9	L1	10	20/1			750		BLOCK HTR (200KW)
INTERIOR LIGHTING - LOWER	1500				20/1	11	L2	12	[			750		[
PLC POWER			1200		20/1	13	L1	14	20/1			792		BATT CHGR (200KW)
INTERIOR RECEPTACLES		1260			20/1	15	L2	16						SPACE
SPACE						17	L1	18						SPACE
SPACE						19	L2	20						SPACE
SPACE						21	L1	22						SPACE
SPACE						23	L2	24						SPACE
SPACE						25	L1	26						SPACE
SPACE						27	L2	28						SPACE
SPACE						29	L1	30						SPACE
SPACE						31	L2	32						SPACE
SPACE						33	L1	34						SPACE
SPACE						35	L2	36						SPACE
SPACE						37	L1	38						SPACE
SPACE						39	L2	40						SPACE
SPACE						41	L1	42						SPACE

CONNECTED VA	L1: 8,418	L2: 8,725

	CONNECTED KVA:	D.F.	DEMAND KVA:
LIGHTING LOAD:	3.9	1.25	4.8
RECEPT. LOAD - FIRST 10 KVA:	1.6	1.00	1.6
RECEPT. LOAD - REMAINDER:	0.0	0.50	0.0
POWER LOAD:	10.5	1.00	10.5
MOTOR LOAD EXCEPT LARGEST:	0.0	1.00	0.0
LARGEST MOTOR:	1.2	1.25	1.5
20% SPARE CAPACITY:	3.7	1.00	3.7
TOTAL CONNECTED LOAD:	20.8	TOTAL DEMAND LOAD:	22.1

AVG KVA
8.6

	AMPS	KVA	
	230.0	55.2	DESIGN (BASED ON SUPPLY)
	86.8	20.8	CONNECTED
	92.0	22.1	DEMAND
	138.0	33.1	**SPARE**

AMPS	KVA	CONNECTED
70	8.4	PHASE L1
73	8.7	PHASE L2

INSTRUCTIONS:

* - ALL BRANCH CIRCUIT BREAKERS ARE 1P20 UNLESS OTHERWISE SHOWN

[- DENOTES ADDITIONAL POLES OF MULTI-POLE CIRCUIT BREAKERS

PHASE LOAD	PHASE BALANCE	
31%	98%	PHASE A
32%	102%	PHASE B

NOTES:

PANEL LOCATED IN CONTROL BUILDING

ENCLOSURE TYPE NEMA 1

STATE OF LOUISIANA
DERRICK S. BOUDREAUX
REG. No. 23288
REGISTERED PROFESSIONAL ENGINEER IN ELECTRICAL ENGINEERING
6/23/16

SHT. 43-E09R

PARISH: EAST BATON ROUGE
CITY: BATON ROUGE
PROJECT: 11-PS-MS-0035

DESIGNED: K. BLACKBURN
CHECKED: D. GOUDEAU
DETAILED: D. SMITH
CHECKED: M. EDWARDS
DATE: MARCH 2016
SHEET

NO.	DATE	REVISION DESCRIPTION	BY
1	6/24/16	ADDED PER ADDENDUM NO. 3	K.B.

MULTIPLE PUMP STATIONS HIGHWAY 61 - PLANK ROAD (AREA NFW-C-0009)

ELECTRICAL PANEL SCHEDULE
PUMP STATION NO. 43

GEC Gulf Engineers & Consultants

AUXILIARY SYSTEMS CONNECTIONS TO PLC

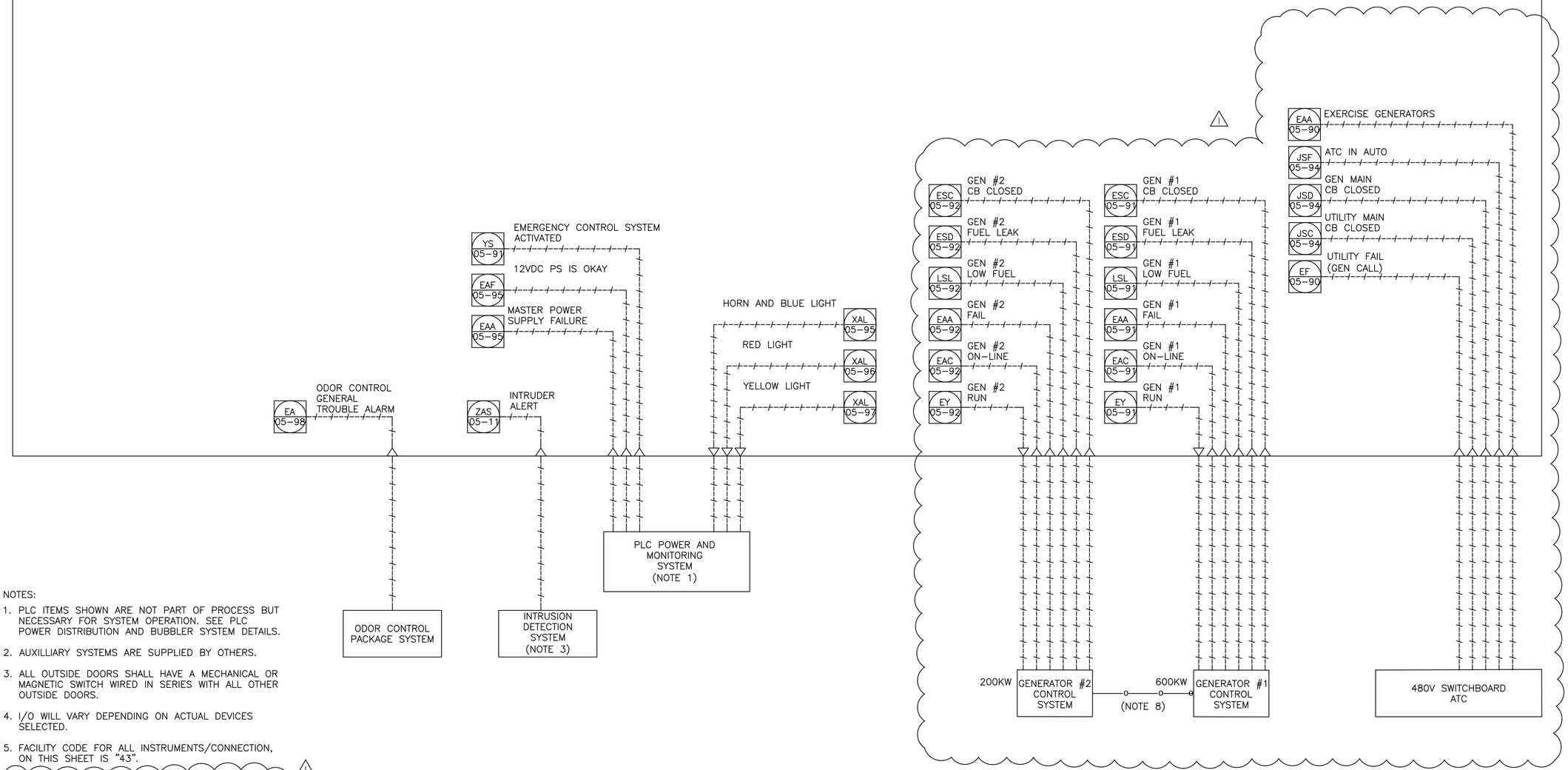

NOTES:

1. PLC ITEMS SHOWN ARE NOT PART OF PROCESS BUT NECESSARY FOR SYSTEM OPERATION. SEE PLC POWER DISTRIBUTION AND BUBBLER SYSTEM DETAILS.
2. AUXILLIARY SYSTEMS ARE SUPPLIED BY OTHERS.
3. ALL OUTSIDE DOORS SHALL HAVE A MECHANICAL OR MAGNETIC SWITCH WIRED IN SERIES WITH ALL OTHER OUTSIDE DOORS.
4. I/O WILL VARY DEPENDING ON ACTUAL DEVICES SELECTED.
5. FACILITY CODE FOR ALL INSTRUMENTS/CONNECTION, ON THIS SHEET IS "43".
6. THE FOLLOWING CABLES ARE PART OF THE GENERATOR SYSTEM. SECTION 16000 PROVIDES MORE DETAILS. 1
   - DISCRETE SIGNALS FOR GENERATOR TO ATC TO INDICATE GENERATOR SYSTEM RUNNING/STOPPING.
   - DISCRETE SIGNALS FROM ATC TO GENERATOR TO START OR STOP GENERATOR.
7. GENERATOR #1 IS 600KW, GENERATOR #2 IS 200KW
8. MANUFACTURER SPECIFIED TWISTED PAIR TO SUPPORT "CAN" NETWORK

STATE OF LOUISIANA
MICHAEL J. CHIASSON
REG. No. 17978
REGISTERED PROFESSIONAL ENGINEER
ELECTRICAL
6/10/16

NO.	DATE	REVISION DESCRIPTION	BY
1	6/24/16	REVISED PER ADDENDUM NO. 3	

DESIGNED M. CHIASSON
CHECKED D. GOUDEAU
DETAILED D. SMITH
CHECKED M. EDWARDS
DATE MARCH 2016
SHEET

PARISH EAST BATON ROUGE
CITY BATON ROUGE
PROJECT 11-PS-MS-0035

SHT. 43-102R

MULTIPLE PUMP STATIONS HIGHWAY 61 – PLANK ROAD (AREA NFW-C-0009)

P&ID NO. 5 – AUX. SYSTEMS PUMP STATION NO. 43

GEC Gulf Engineers & Consultants

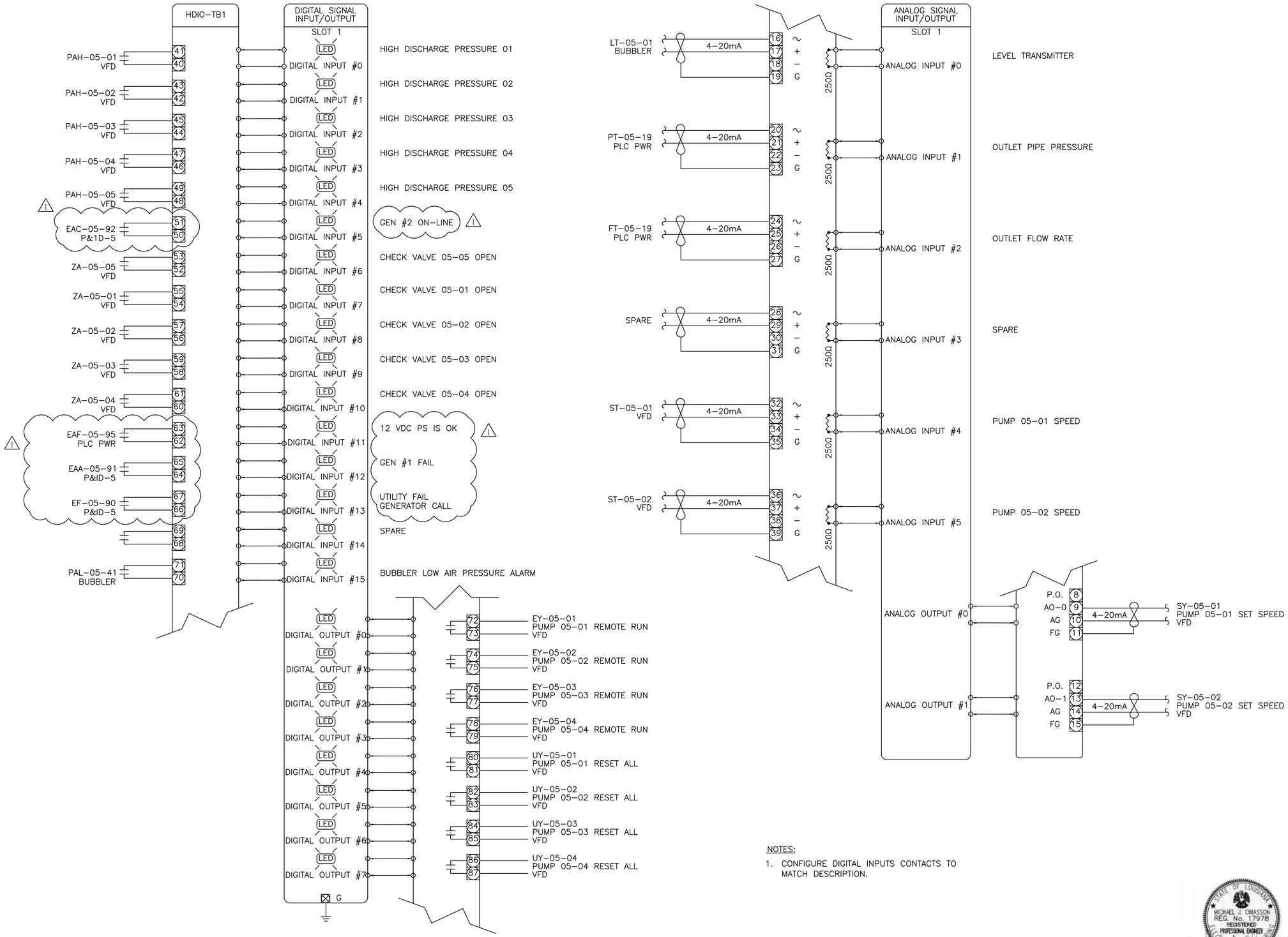

NOTES:

1. CONFIGURE DIGITAL INPUTS CONTACTS TO MATCH DESCRIPTION.

STATE OF LOUISIANA
MICHAEL J. CHIASSON
REG. No. 17978
REGISTERED
PROFESSIONAL ENGINEER
6/10/16

SHT. 43-103R

PARISH: EAST BATON ROUGE
CITY: BATON ROUGE
PROJECT: 11-PS-MS-0035

DESIGNED M. CHIASSON
CHECKED D. GOUDEAU
DETAILED D. SMITH
CHECKED M. EDWARDS
DATE MARCH 2016
SHEET

NO.	DATE	REVISION DESCRIPTION	BY
1	6/24/16	ADDED PER ADDENDUM NO. 3	

MULTIPLE PUMP STATIONS HIGHWAY 61 – PLANK ROAD (AREA NFW-C-0009)

MULTI INPUT CARD, SLOT 1
PUMP STATION NO. 43

GEC Gulf Engineers & Consultants

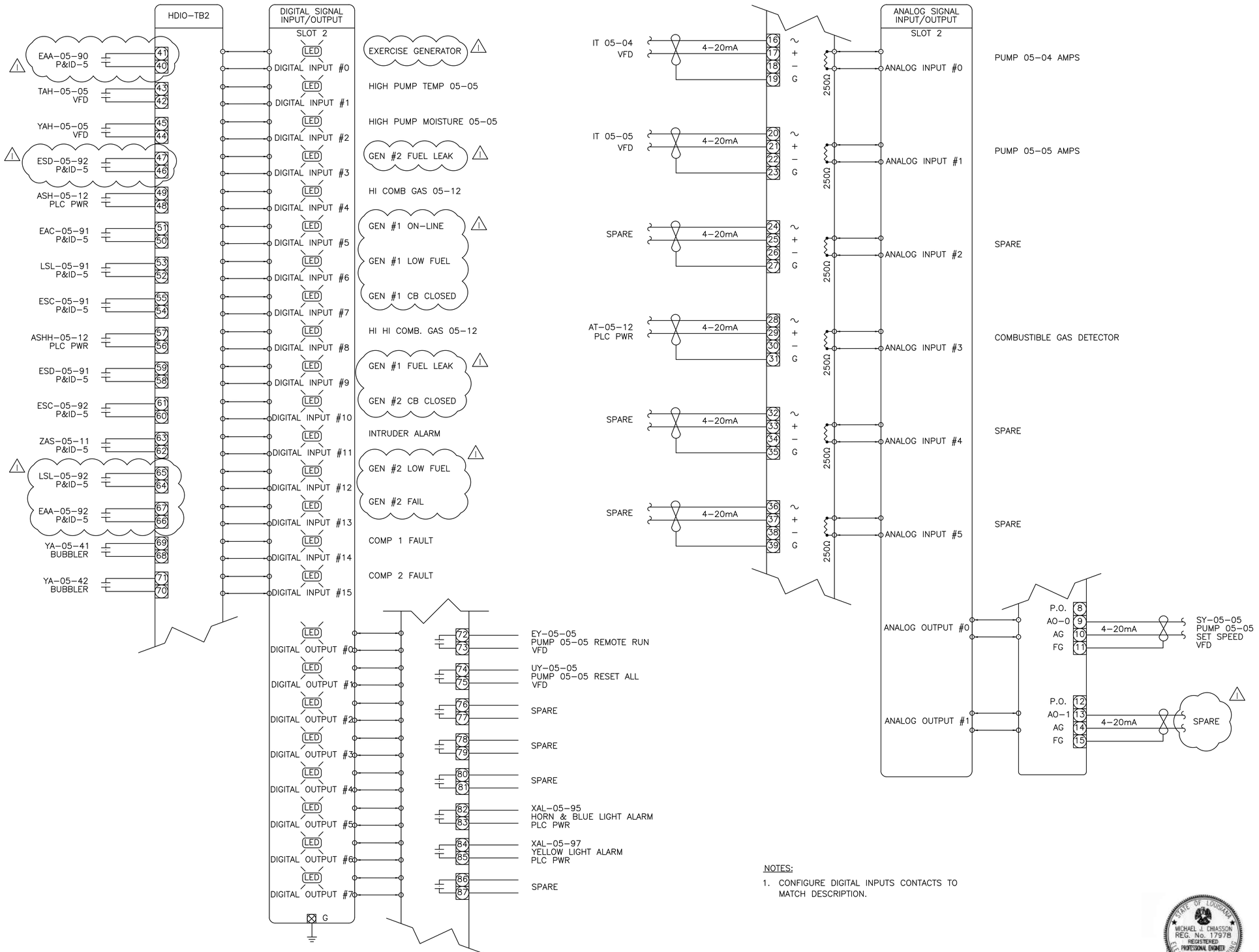

NOTES:

1. CONFIGURE DIGITAL INPUTS CONTACTS TO MATCH DESCRIPTION.

STATE OF LOUISIANA
MICHAEL L. CHIASSON
REG. No. 17978
REGISTERED
PROFESSIONAL ENGINEER
6/10/16

SHT.	43-104R
PARISH	EAST BATON ROUGE
CITY	BATON ROUGE
PROJECT	11-PS-MS-0035
DESIGNED	M. CHIASSON
CHECKED	D. GOUDEAU
DETAILED	D. SMITH
CHECKED	M. EDWARDS
DATE	MARCH 2016
SHEET	

NO.	DATE	REVISION DESCRIPTION	BY
3	6/24/16	ADDED PER ADDENDUM NO. 3	

MULTIPLE PUMP STATIONS HIGHWAY 61 – PLANK ROAD (AREA NFW-C-0009)

MULTI INPUT CARD, SLOT 2
PUMP STATION NO. 43

GEC Gulf Engineers & Consultants

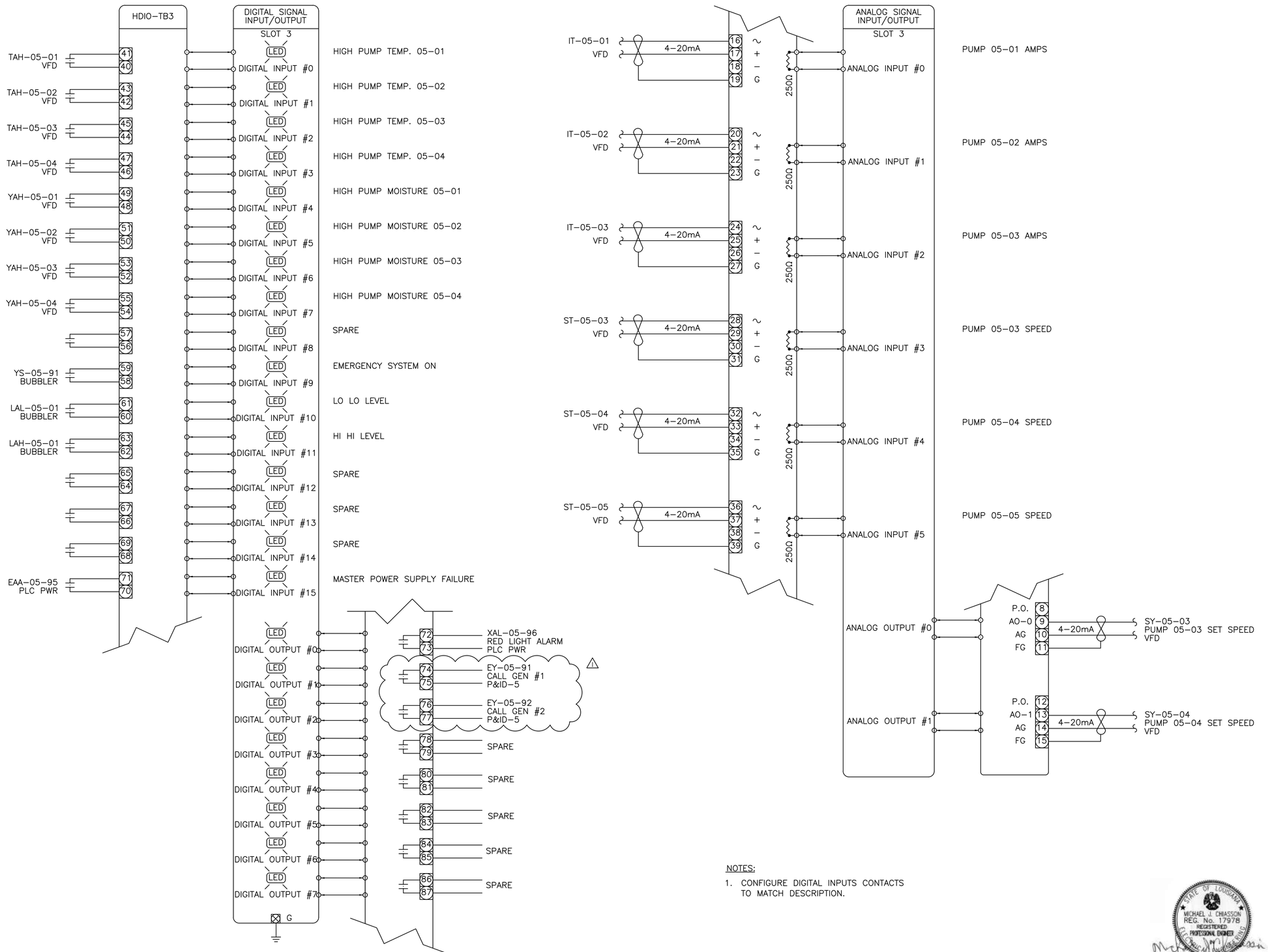

NOTES:

1. CONFIGURE DIGITAL INPUTS CONTACTS TO MATCH DESCRIPTION.

STATE OF LOUISIANA
MICHAEL J. CHIASSON
REG. No. 17978
REGISTERED PROFESSIONAL ENGINEER
6/10/16

SHT.	43-105R
PARISH	EAST BATON ROUGE
CITY	BATON ROUGE
PROJECT	11-PS-MS-0035
DESIGNED	M. CHIASSON
CHECKED	D. GOUDEAU
DETAILED	D. SMITH
CHECKED	M. EDWARDS
DATE	MARCH 2016
SHEET	

NO.	DATE	REVISION DESCRIPTION	BY
1	6/24/16	ADDED PER ADDENDUM NO. 3	

MULTIPLE PUMP STATIONS HIGHWAY 61 – PLANK ROAD (AREA NFW-C-0009)

MULTI INPUT CARD, SLOT 3
PUMP STATION NO. 43

GEC Gulf Engineers & Consultants

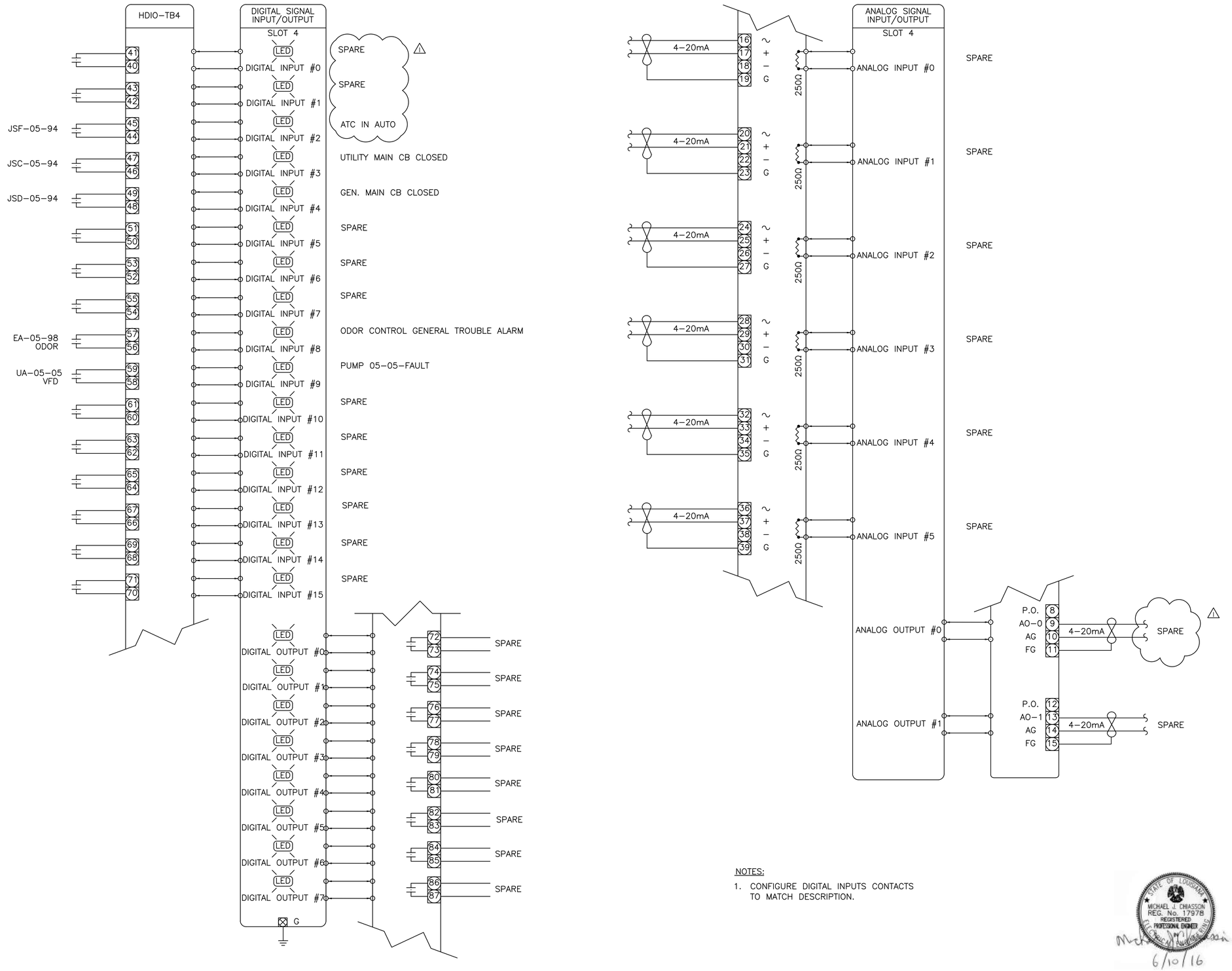

NOTES:

1. CONFIGURE DIGITAL INPUTS CONTACTS TO MATCH DESCRIPTION.

STATE OF LOUISIANA
MICHAEL J. CHIASSON
REG. No. 17978
REGISTERED PROFESSIONAL ENGINEER
ELECTRICAL ENGINEERING
6/10/16

SHT.	43-106R
PARISH	EAST BATON ROUGE
CITY	BATON ROUGE
PROJECT	11-PS-MS-0035
DESIGNED	M. CHIASSON
CHECKED	D. GOUDEAU
DETAILED	D. SMITH
CHECKED	M. EDWARDS
DATE	MARCH 2016
SHEET	

NO.	DATE	REVISION DESCRIPTION	BY
3	6/24/16	ADDED PER ADDENDUM NO. 3	

MULTIPLE PUMP STATIONS HIGHWAY 61 – PLANK ROAD
(AREA NFW-C-0009)

MULTI INPUT CARD, SLOT 4
PUMP STATION NO. 43

GEC
Gulf Engineers & Consultants

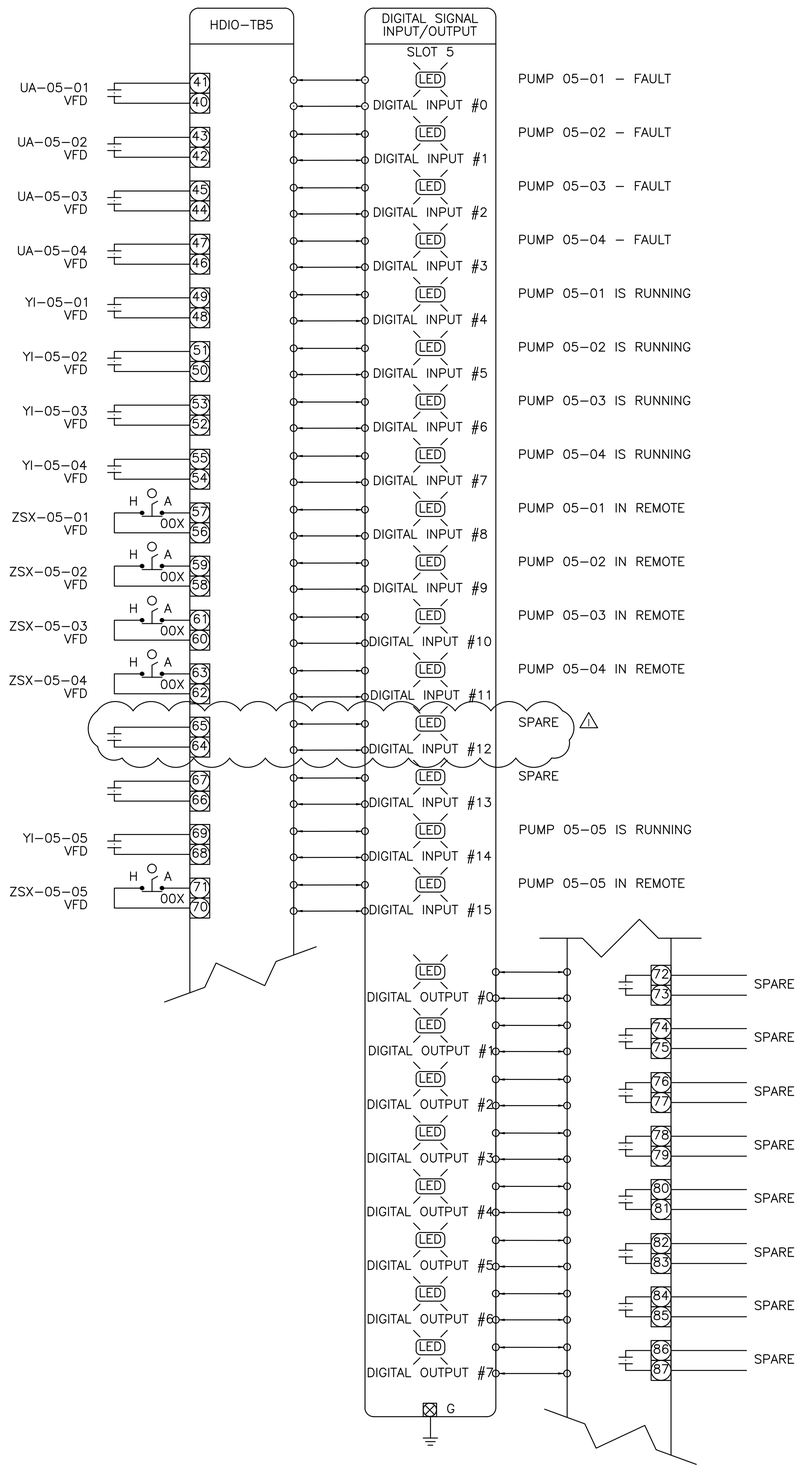

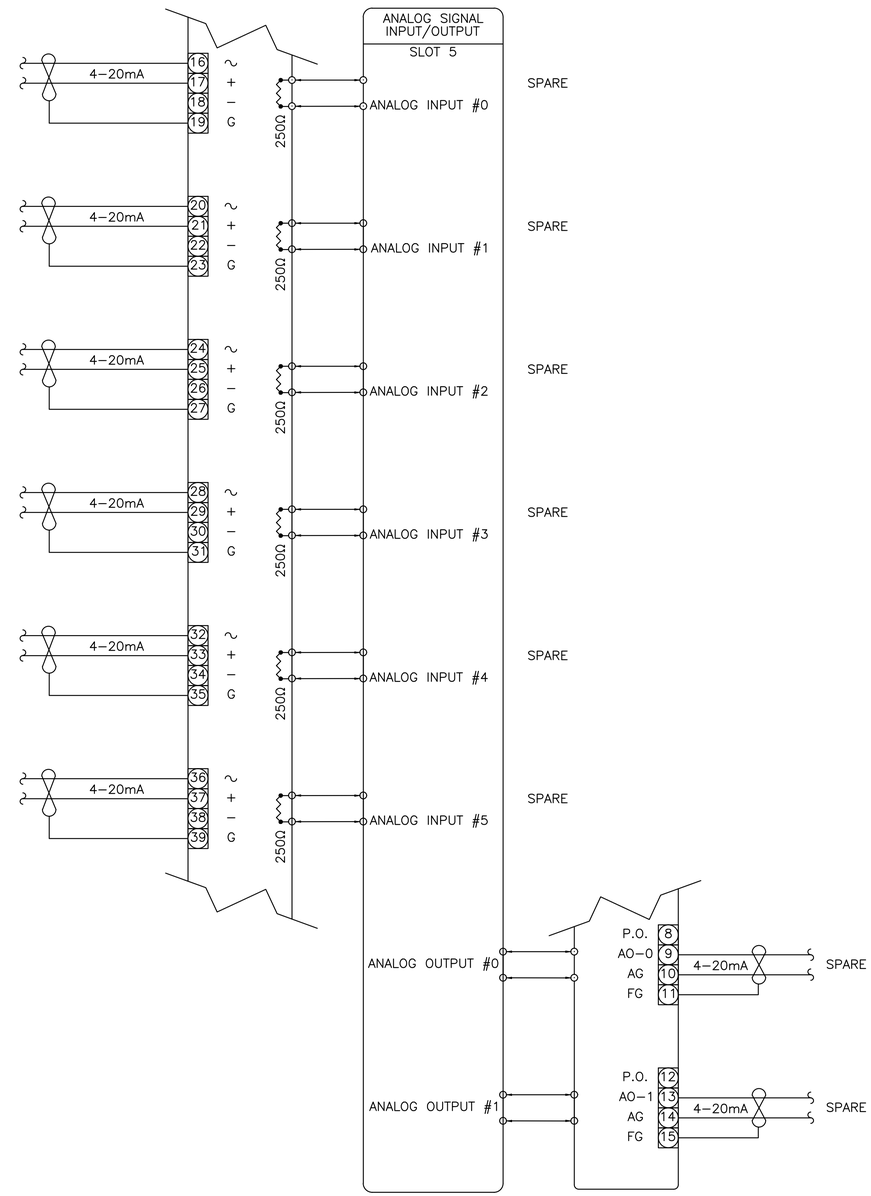

NOTES:

1. CONFIGURE DIGITAL INPUTS CONTACTS TO MATCH DESCRIPTION.

STATE OF LOUISIANA
MICHAEL J. CHIASSON
REG. No. 17978
REGISTERED PROFESSIONAL ENGINEER
ELECTRICAL ENGINEERING

6/10/16

SHT.	43-107R
PARISH	EAST BATON ROUGE
CITY	BATON ROUGE
PROJECT	11-PS-MS-0035
DESIGNED	M. CHIASSON
CHECKED	D. GOUDEAU
DETAILED	D. SMITH
CHECKED	M. EDWARDS
DATE	MARCH 2016
SHEET	

NO.	DATE	REVISION DESCRIPTION	BY
1	6/24/16	ADDED PER ADDENDUM NO. 3	

MULTIPLE PUMP STATIONS HIGHWAY 61 – PLANK ROAD
(AREA NFW-C-0009)

MULTI INPUT CARD, SLOT 5
PUMP STATION NO. 43

GEC
Gulf Engineers & Consultants

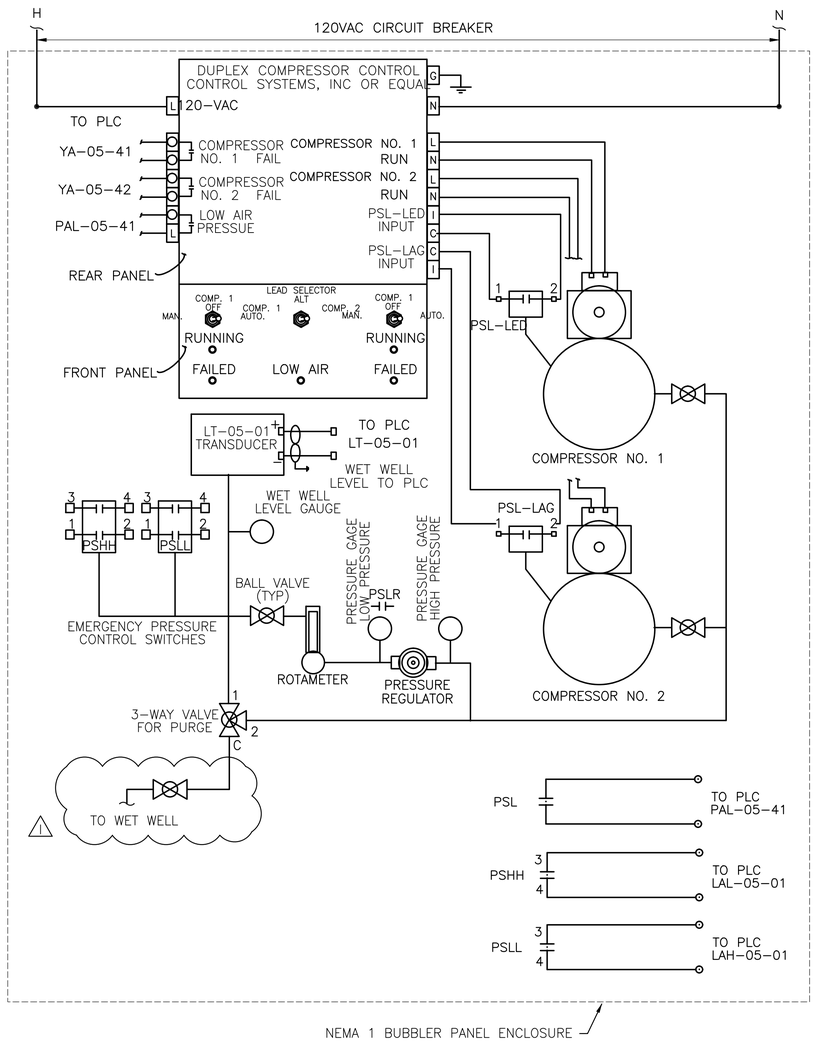

BUBBLER AND EMERGENCY CONTROL SYSTEM

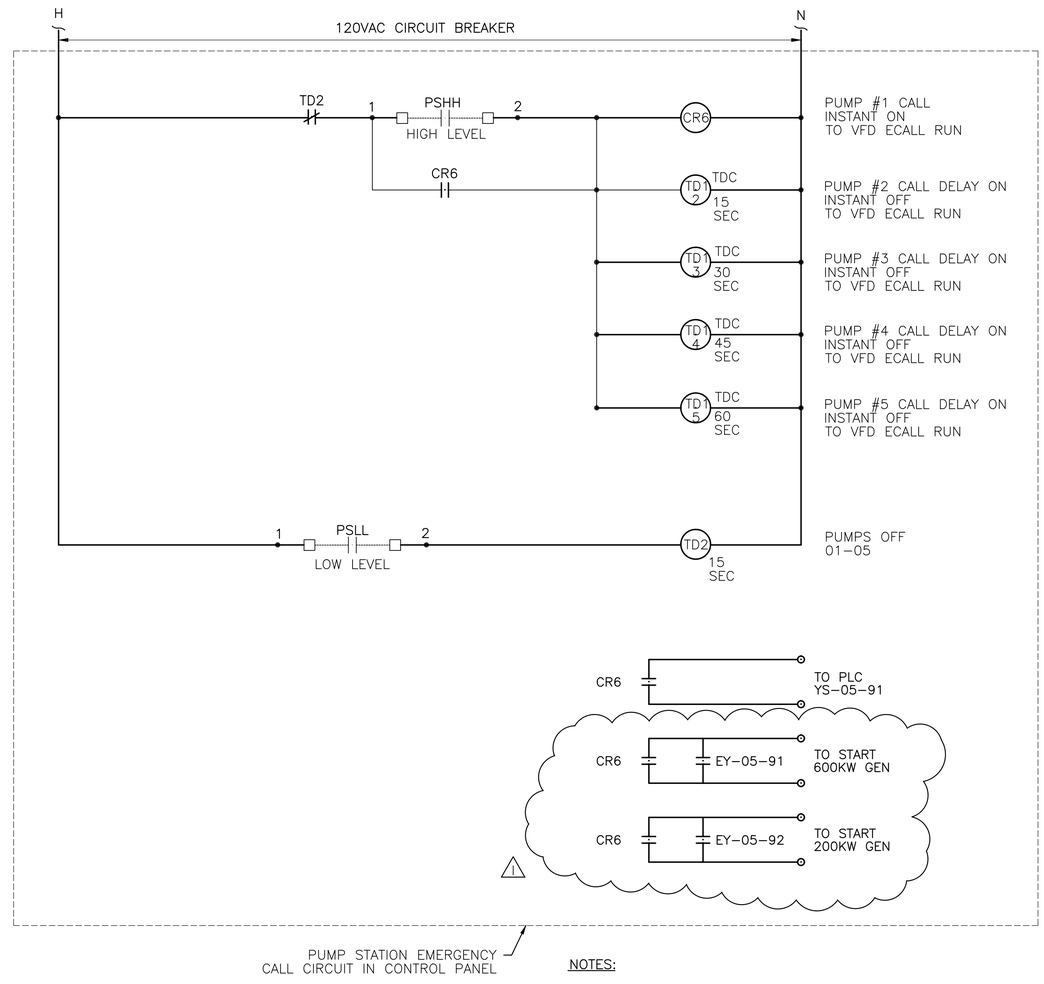

NOTES:

1. BUBBLER SYSTEM SHALL BE SUPPLIED WITH DUPLEX AIR COMPRESSORS CONFIGURED FOR AUTOMATIC SWITCHOVER IN THE EVENT OF A COMPRESSOR FAILURE. INSTALL BUBBLER SYSTEM IN THE CONTROL PANEL.

2. GAS MONITORING LCP SHOWS FUNCTIONAL REQUIREMENTS ONLY. COMPLETE DETAILED DESIGN BASED ON ACTUAL COMPONENT SELECTIONS.

STATE OF LOUISIANA
MICHAEL J. CHIASSON
REG. No. 17978
REGISTERED
PROFESSIONAL ENGINEER

6/10/16

SHT. 43-109R

PARISH: EAST BATON ROUGE
CITY: BATON ROUGE
PROJECT: 11-PS-MS-0035

DESIGNED: M. CHIASSON
CHECKED: D. GOUDEAU
DETAILED: D. SMITH
CHECKED: M. EDWARDS
DATE: MARCH 2016
SHEET

NO.	DATE	REVISION DESCRIPTION	BY
1	6/24/16	ADDED PER ADDENDUM NO. 3	

MULTIPLE PUMP STATIONS HIGHWAY 61 – PLANK ROAD
(AREA NFW-C-0009)

BUBBLER SYSTEM AND ECS
PUMP STATION NO. 43

GEC Gulf Engineers & Consultants

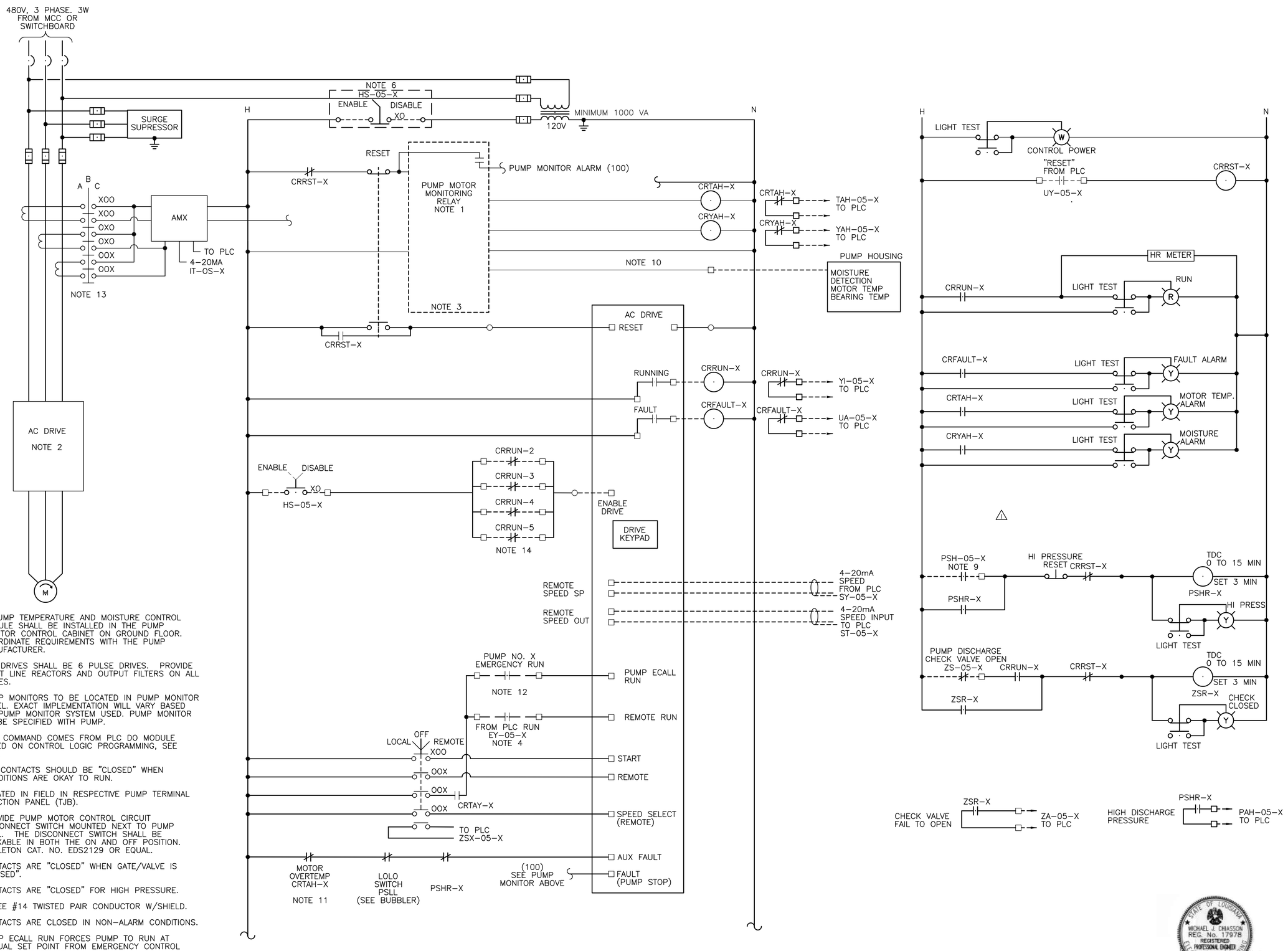

NOTES:

1. A PUMP TEMPERATURE AND MOISTURE CONTROL MODULE SHALL BE INSTALLED IN THE PUMP MONITOR CONTROL CABINET ON GROUND FLOOR. COORDINATE REQUIREMENTS WITH THE PUMP MANUFACTURER.
2. ALL DRIVES SHALL BE 6 PULSE DRIVES. PROVIDE INPUT LINE REACTORS AND OUTPUT FILTERS ON ALL DRIVES.
3. PUMP MONITORS TO BE LOCATED IN PUMP MONITOR PANEL. EXACT IMPLEMENTATION WILL VARY BASED ON PUMP MONITOR SYSTEM USED. PUMP MONITOR TO BE SPECIFIED WITH PUMP.
4. RUN COMMAND COMES FROM PLC DO MODULE BASED ON CONTROL LOGIC PROGRAMMING, SEE DWG.
5. ALL CONTACTS SHOULD BE "CLOSED" WHEN CONDITIONS ARE OKAY TO RUN.
6. LOCATED IN FIELD IN RESPECTIVE PUMP TERMINAL JUNCTION PANEL (TJB).
7. PROVIDE PUMP MOTOR CONTROL CIRCUIT DISCONNECT SWITCH MOUNTED NEXT TO PUMP WELL. THE DISCONNECT SWITCH SHALL BE LOCKABLE IN BOTH THE ON AND OFF POSITION. APPLETON CAT. NO. EDS2129 OR EQUAL.
8. CONTACTS ARE "CLOSED" WHEN GATE/VALVE IS "CLOSED".
9. CONTACTS ARE "CLOSED" FOR HIGH PRESSURE.
10. THREE #14 TWISTED PAIR CONDUCTOR W/SHIELD.
11. CONTACTS ARE CLOSED IN NON-ALARM CONDITIONS.
12. PUMP ECALL RUN FORCES PUMP TO RUN AT MANUAL SET POINT FROM EMERGENCY CONTROL SYSTEM IN BUBBLER.
13. PROVIDE DEDICATED, APPROPRIATELY SIZED CPT FOR EACH VFD DRIVE.
14. TYPICAL FOR PUMP NO.X. X=1 THROUGH 5. PUMP MOTOR CONTROLS TYPICAL TO PUMP NO.X=1.

TYPICAL PUMP VFD CONTROL DIAGRAM

X = 01, 02, 03, 04, 05

STATE OF LOUISIANA
MICHAEL J. CHIASSON
REG. No. 17978
REGISTERED
PROFESSIONAL ENGINEER
6/10/16

SHT.	43-111R
PARISH	EAST BATON ROUGE
CITY	BATON ROUGE
PROJECT	11-PS-MS-0035
DESIGNED	M. CHIASSON
CHECKED	D. GOUDEAU
DETAILED	D. SMITH
CHECKED	M. EDWARDS
DATE	MARCH 2016
SHEET	

NO.	DATE	REVISION DESCRIPTION	BY
1	6/24/16	REVISED PER ADDENDUM NO. 3	

MULTIPLE PUMP STATIONS HIGHWAY 61 – PLANK ROAD
(AREA NFW-C-0009)

PROGRAM PUMP STATIONS (PDP)
TYPICAL VFD CONTROL WIRING DIAGRAM

GEC Gulf Engineers & Consultants

LEGEND:

AE- ANALOG ELEMENT
AIT- ANALOG INDICATING TRANSMITTER
BFD- BUTTERFLY DAMPER
BDD- BACKDRAFT DAMPER
BV- BALL VALVE
CV- CHECK VALVE
DR- DRAIN
DV- DIAPHRAGM VALVE
FA- FOUL AIR
FLX- FLEX CONNECTOR
GV- GLOBE VALVE
HDP- HIGH DIFFERENTIAL PRESSURE SWITCH
LG- LEVEL GAUGE
LSL- LEVEL SWITCH LOW
LSLL- LEVEL SWITCH LOW LOW
NC- NORMALLY CLOSED
NO- NORMALLY OPEN
PDT- PRESSURE DIFFERENTIAL TRANSMITTER 1
PRV- PRESSURE REDUCING VALVE
PI- PRESSURE INDICATOR
RM- ROTAMETER
S- SOLENOID VALVE
D- TRANSITION

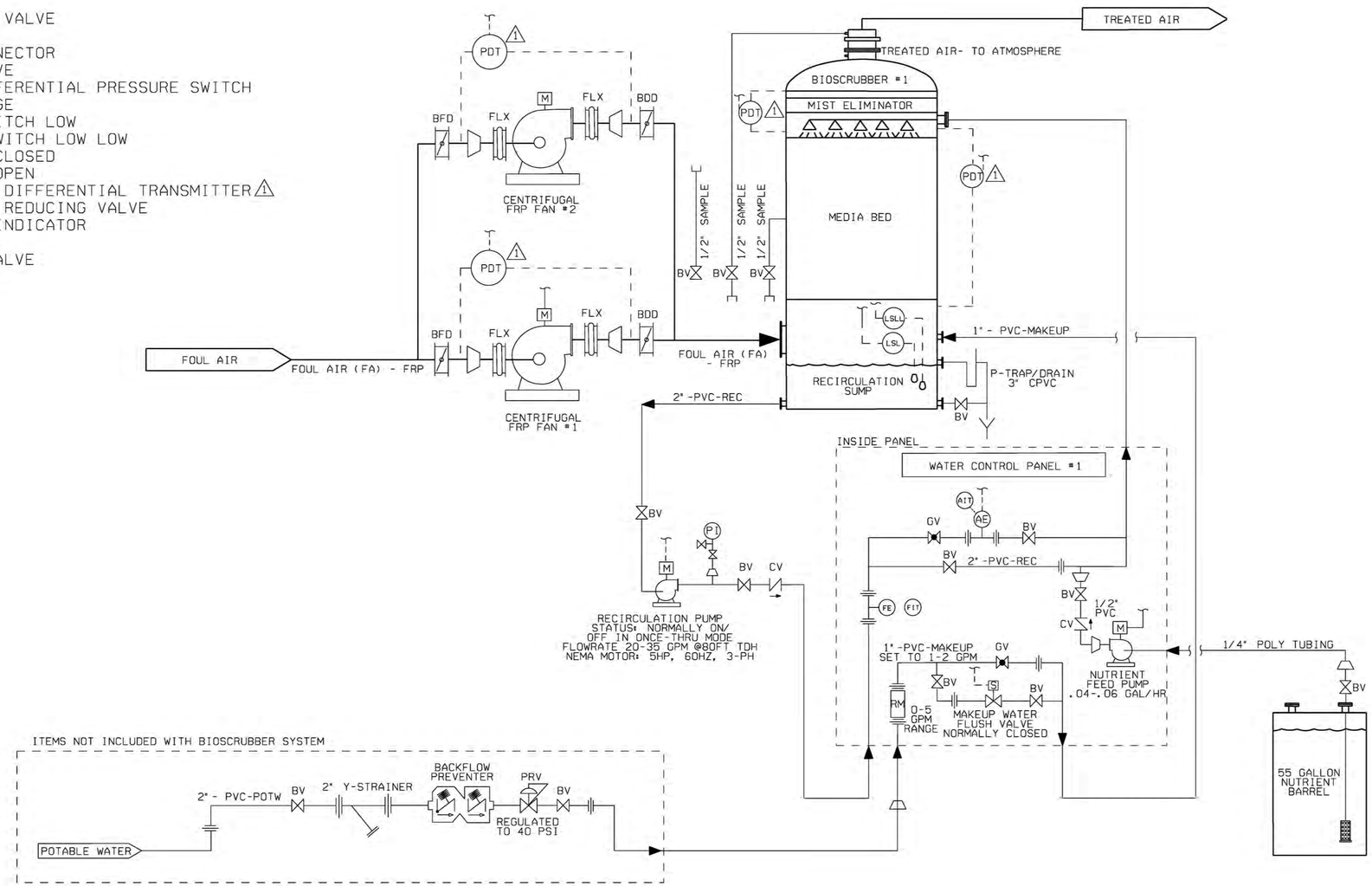

BIO-DAN CONTROL SYSTEM: P & ID BIOSCRUBBER

NOTES:

INSTRUMENTATION SHALL BE RIGIDLY MOUNTED PER MANUFACTURER WRITTEN INSTRUCTIONS. BASE FLANGE OF UNISTRUT SHALL BE MOUNTED ON 4 SIDES WITH STAINLESS STEEL CONCRETE WEDGE ANCHORS.

STATE OF LOUISIANA
KIRK A. MILLS
PROFESSIONAL ENGINEER IN CIVIL ENGINEERING
6/24/2016

NO.	DATE	BY	REVISION DESCRIPTION
1	6.24.2016	J.M.K.	REVISED PDI TO PDT PER ADDENDUM NO. 3

DESIGNED A. LESLIE
CHECKED K. MILLS
DETAILED
CHECKED
DATE MARCH 2016
SHEET 3 OF 4

PARISH EAST BATON ROUGE
CITY BATON ROUGE
PROJECT 11-PS-MS-0035
SHT. 43-0C03R

PUBLIC WORKS

MULTIPLE PUMP STATIONS HIGHWAY 61 – PLANK ROAD (AREA NFW-C-0009)

ODOR CONTROL SYSTEM P&I DIAGRAM

CITY OF BATON ROUGE / PARISH OF EAST BATON ROUGE

GEC Gulf Engineers & Consultants

NOTES:

1. ALL BURIED D.I.P. FORCE MAIN PIPE, FITTINGS AND VALVES SHALL BE OF THE RESTRAINED JOINT TYPE. AFTER INSTALLATION ALL RESTRAINED JOINTS SHALL BE PULLED OR EXTENDED TO REMOVE ANY JOINT SLACK.
2. ALL D.I.P. FORCE MAIN PIPE, FITTINGS, AND VALVES SHALL BE CLASS 250 AND CERAMIC LINED IN ACCORDANCE WITH SECTION 804 OF THE SPECIAL PROVISIONS. ALL BURIED D.I.P., FITTINGS AND VALVES SHALL ALSO BE POLYETHYLENE ENCASED IN ACCORDANCE WITH SECTION 804 OF THE SPECIAL PROVISIONS.

STATE OF LOUISIANA
JEROME M. KLIER
Reg. No. 11591
REGISTERED PROFESSIONAL ENGINEER IN CIVIL ENGINEERING
4-13-2016

GRAPHIC SCALE

10 0 5 10 20 40

(IN FEET)
1 INCH = 10 ft.

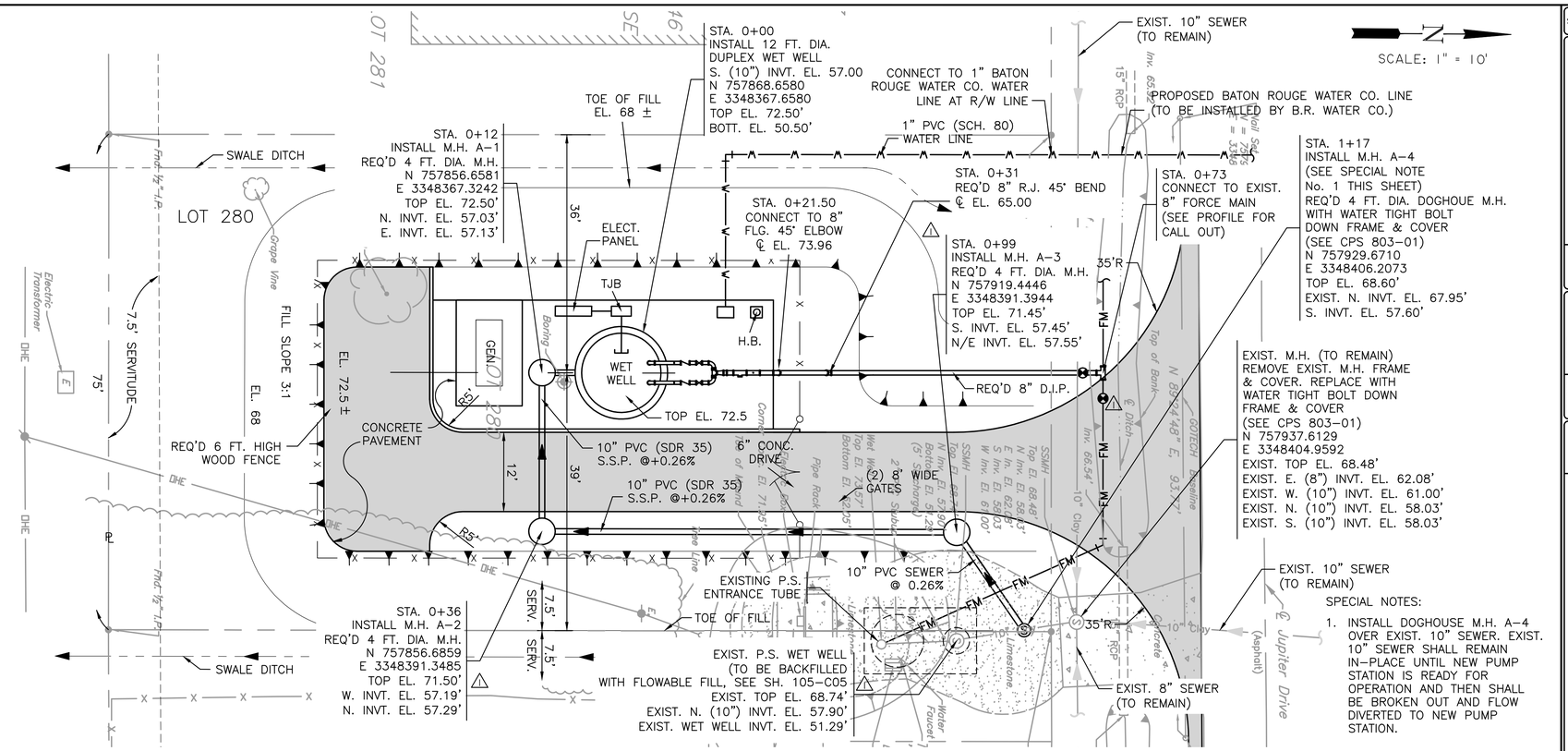

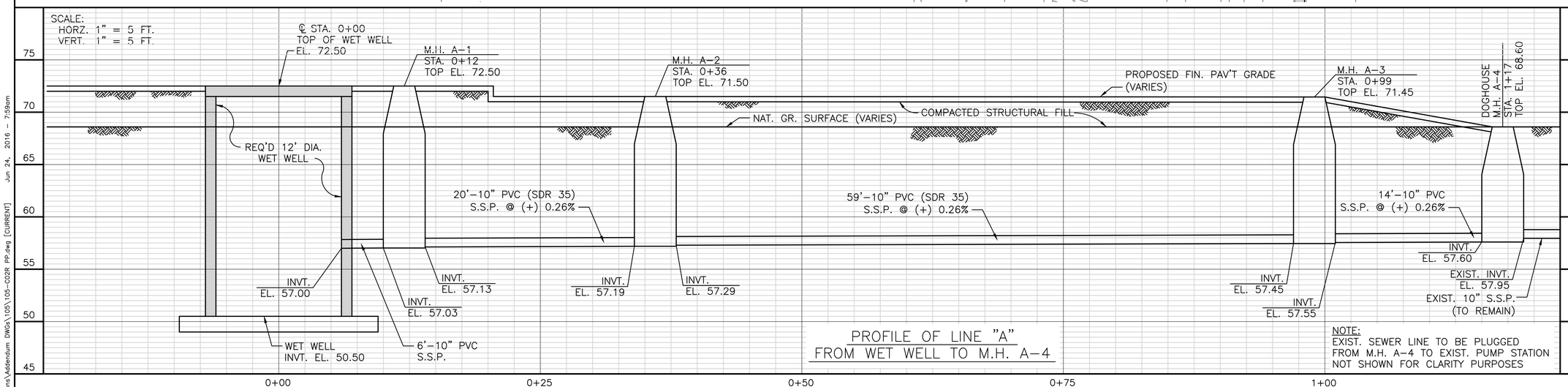

PROFILE OF LINE "A"
FROM WET WELL TO M.H. A-4

NOTE:
EXIST. SEWER LINE TO BE PLUGGED FROM M.H. A-4 TO EXIST. PUMP STATION NOT SHOWN FOR CLARITY PURPOSES

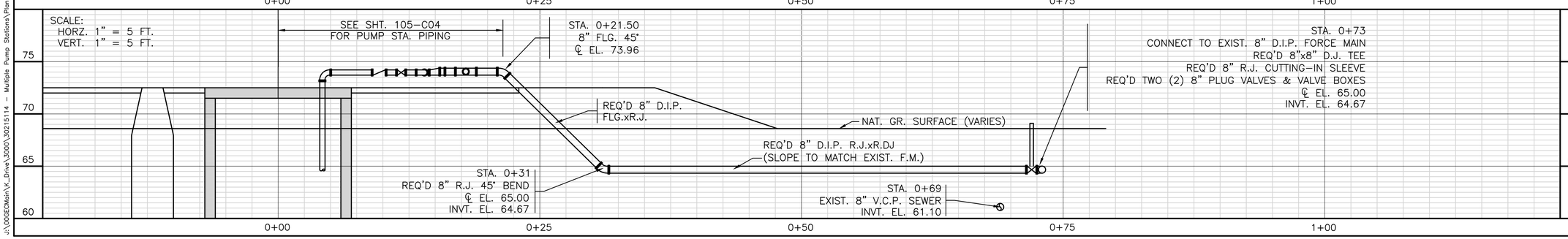

SHT.	105-C02R
PARISH	EAST BATON ROUGE
CITY	BATON ROUGE
PROJECT	11-PS-MS-0035
DESIGNED	J. KLIER
CHECKED	J. RICHARDSON
DETAILED	D. SMITH
CHECKED	D. ROSHTO
DATE	MARCH 2016
SHEET	
BY	J.M.K.

NO.	DATE	REVISION DESCRIPTION
1	6/24/16	GENERAL PLAN REV PER ADDENDUM NO. 3

MULTIPLE PUMP STATIONS HIGHWAY 61 – PLANK ROAD (AREA NFW-C-0009)

PROPOSED SITE PLAN IMPROVEMENTS PUMP STATION NO. 105

GEC Gulf Engineers & Consultants

J:\GOCEEMain\K_Drive\3000\3021514 – Multiple Pump Stations\Plans\Addendum DWGs\105\105-C02R PP.dwg [CURRENT] Jun 24, 2016 – 7:59am

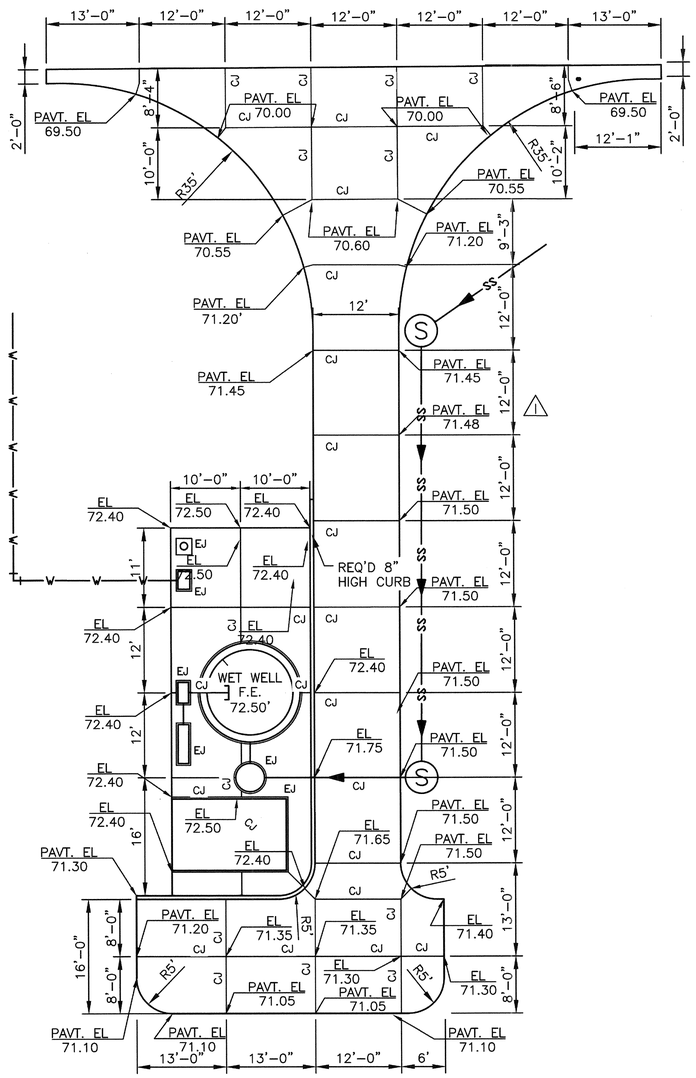

CONCRETE SLAB & DRIVE DETAILS
1 inch = 10 ft.

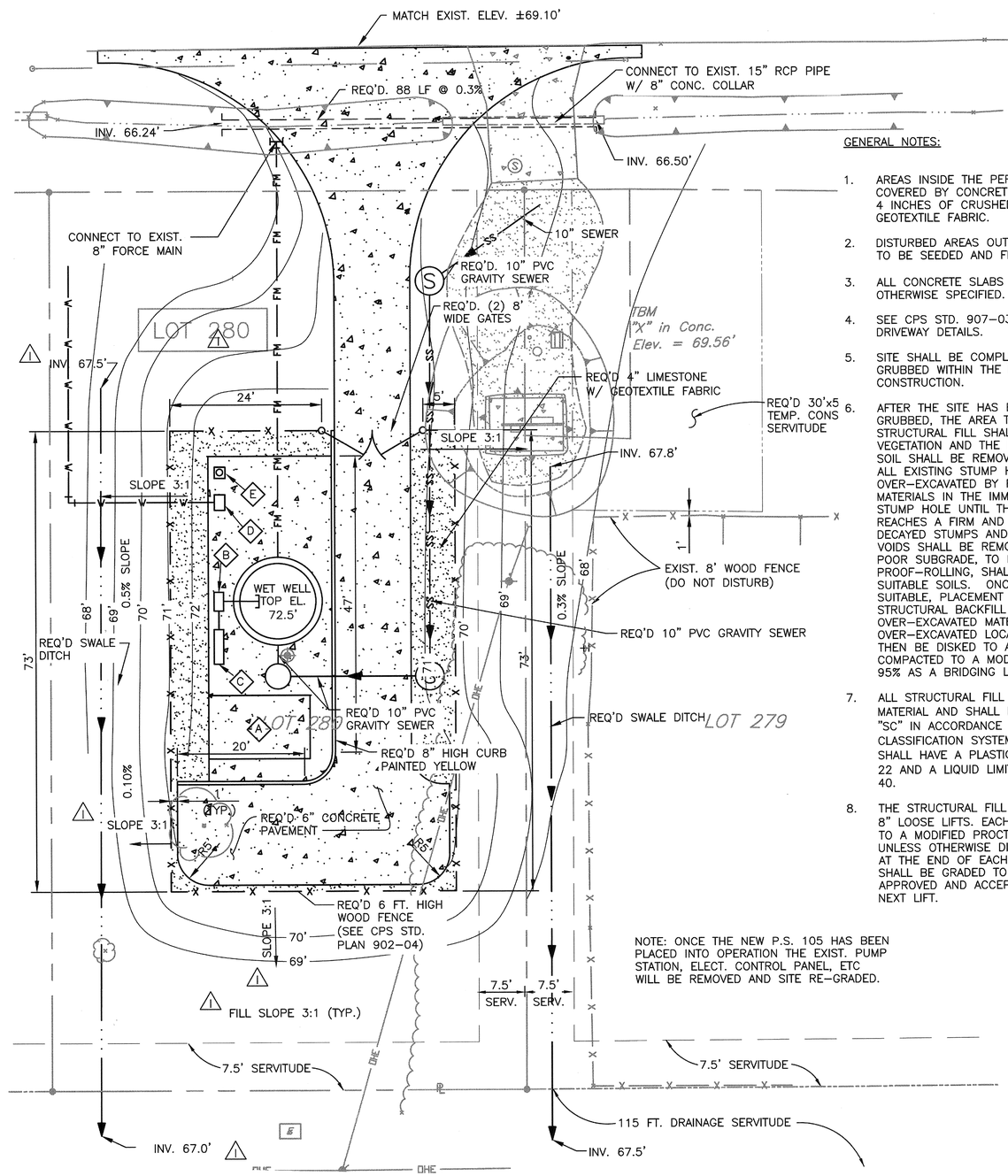

SITE PLAN
1 inch = 10 ft.

GENERAL NOTES:

1. AREAS INSIDE THE PERIMETER FENCING NOT COVERED BY CONCRETE SHALL BE COVERED WITH 4 INCHES OF CRUSHED LIMESTONE WITH GEOTEXTILE FABRIC.
2. DISTURBED AREAS OUTSIDE THE PERIMETER FENCE TO BE SEEDED AND FERTILIZED.
3. ALL CONCRETE SLABS SHALL BE 6" THICK UNLESS OTHERWISE SPECIFIED.
4. SEE CPS STD. 907-03, SHEET 1 OF 3, FOR DRIVEWAY DETAILS.
5. SITE SHALL BE COMPLETELY CLEARED AND GRUBBED WITHIN THE LIMITS OF THE REQUIRED CONSTRUCTION.
6. AFTER THE SITE HAS BEEN CLEARED AND GRUBBED, THE AREA TO BE COVERED WITH STRUCTURAL FILL SHALL BE STRIPPED OF ALL VEGETATION AND THE EXISTING 6-INCHES OF TOP SOIL SHALL BE REMOVED AND DISPOSED OFF-SITE. ALL EXISTING STUMP HOLES SHALL BE OVER-EXCAVATED BY REMOVING ALL SOFT MATERIALS IN THE IMMEDIATE VICINITY OF THE STUMP HOLE UNTIL THE EXCAVATION BOTTOM REACHES A FIRM AND UNYIELDING CONDITION. DECAYED STUMPS AND STUMPS WITH EXCESSIVE VOIDS SHALL BE REMOVED. OTHER AREAS OF POOR SUBGRADE, TO BE IDENTIFIED BY PROOF-ROLLING, SHALL BE OVER-EXCAVATED TO SUITABLE SOILS. ONCE THE SUBGRADE IS SUITABLE, PLACEMENT OF CONTROLLED-COMPACTED STRUCTURAL BACKFILL SOIL TO REPLACE OVER-EXCAVATED MATERIALS MAY BEGIN AT THE OVER-EXCAVATED LOCATIONS. THE SITE SHALL THEN BE DISKED TO A DEPTH OF 8-INCHES AND COMPACTED TO A MODIFIED PROCTOR DENSITY OF 95% AS A BRIDGING LAYER AND GRADED TO DRAIN.
7. ALL STRUCTURAL FILL SHALL BE IMPORTED SELECT MATERIAL AND SHALL BE CLASSIFIED AS "CL" OR "SC" IN ACCORDANCE WITH THE UNIFIED SOIL CLASSIFICATION SYSTEM (USCS). THE MATERIAL SHALL HAVE A PLASTICITY INDEX (P.I.) OF 12 TO 22 AND A LIQUID LIMIT (L.L.) NO GREATER THAN 40.
8. THE STRUCTURAL FILL SHALL BE CONSTRUCTED IN 8" LOOSE LIFTS. EACH LIFT SHALL BE COMPACTED TO A MODIFIED PROCTOR DENSITY OF 95%. UNLESS OTHERWISE DIRECTED BY THE ENGINEER. AT THE END OF EACH WORK DAY THE LAST LIFT SHALL BE GRADED TO DRAIN. EACH LIFT SHALL BE APPROVED AND ACCEPTED BEFORE PLACING THE NEXT LIFT.

NOTE: ONCE THE NEW P.S. 105 HAS BEEN PLACED INTO OPERATION THE EXIST. PUMP STATION, ELECT. CONTROL PANEL, ETC WILL BE REMOVED AND SITE RE-GRADED.

LEGEND

SS	REQ'D SEWER LINE
S	REQ'D MANHOLE
FM	REQ'D D.I.P. FORCE MAIN
X	REQ'D 6' HIGH WOOD FENCE
	PROPERTY LINE
	REQ'D SWALE DITCH
	REQ'D. DRAINAGE PIPE
	REQ'D 6" CONCRETE PAVEMENT
	REQ'D 4" LIMESTONE W/ GEOTEXTILE FABRIC
A	GENERATOR
B	TJB
C	CONTROL PANEL
D	BACKFLOW PREVENTER
E	HOSE BIBB

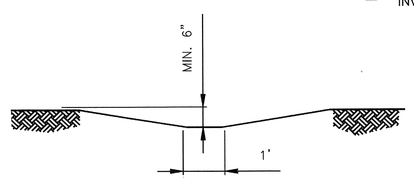

SWALE DETAIL
N.T.S.

VOLKERT

CALL LOUISIANA ONE CALL 811 OR 1-800-272-3020
LOUISIANA STATE LAW, SECTION R.S.45:1748.15, REQUIRES EXCAVATORS AND DEMOLISHERS TO NOTIFY A REGIONAL NOTIFICATION CENTER BY TELEPHONE AT LEAST 72 HOURS IN ADVANCE OF ANY EXCAVATION OR DEMOLITION ACTIVITY. THE OWNERS/OPERATORS OF ANY UNDERGROUND FACILITY MUST THEN MARK THE AREA OR PROVIDE INFORMATION THAT WILL ENABLE AN EXCAVATOR OR DEMOLISHER TO DETERMINE THE LOCATION OF UNDERGROUND FACILITIES.

STATE OF LOUISIANA
ASHLEY K. BECKENDORF
License No. 37334
PROFESSIONAL ENGINEER
6/24/16

FLOOD INFORMATION
FIRM PANEL NO. 220058-0180E
FIRM DATE: MAY 2, 2008
FIRM FLOOD ZONE: AE
FIRM BASE FLOOD EL. 71.5 FT. NGVD
RECORD INUNDATION 70.0 FT. NGVD

SHT.	105-C03R
PARISH	EAST BATON ROUGE
CITY	BATON ROUGE
PROJECT	11-PS-MS-0035
DESIGNED	A. BECKENDORF
CHECKED	J. KLIER
DETAILED	S. GRISHAM
CHECKED	A. BECKENDORF
DATE	MARCH 2015
SHEET	
BY	J.M.K.

NO.	DATE	REVISION DESCRIPTION
1	6/24/16	GEN. PLAN REV. ADDED PER ADDENDUM NO. 3

MULTIPLE PUMP STATIONS HIGHWAY 61 - PLANK ROAD (AREA NFW-C-0009)

SITE PLAN
PUMP STATION NO. 105

PUBLIC WORKS

GEC Gulf Engineers & Consultants

PUMP STATION 105

ITEM	DESCRIPTION	DIMENSIONS
A –	WET WELL BASE DIAMETER	228" (19'–0") (SEE SHEET NO. PS 105–S01)
B –	WET WELL OUTSIDE DIAMETER	168" (14'–0") (SEE SHEET NO. PS 105–S01)
C –	WET WELL INSIDE DIAMETER	144" (12'–0")
D –	CHECK VALVE (2 REQD.)	6" FLANGED
E –	GATE VALVE (2 REQD.)	6" FLANGED
F –	AIR RELEASE VALVE/VACUUM VALVE ASSEMBLY	2" (REQ'D 6"x6"x4" FLG. TEE W/2" TAPPED 4" BLIND FLG.
G –	EMERGENCY CONNECTION DIAMETER	4" (REQ'D 6"x6"x4" FLG. TEE)
H –	FORCE MAIN DIAMETER	8" DIP (6"x8" FLG RED. REQ'D)
I –	WET WELL BASE REINFORCING	(SEE SHEET No. 105–S01 & 105–S02)
J –	WET WELL BEDDING MATERIAL THICKNESS	12" (MIN.) (SEE 105–S01)
K –	WET WELL BASE THICKNESS	15" (1'–3") (SEE SHEET No. 105–S01 & 105–S02)
L –	DUCTILE IRON PIPE DIAMETER	6" FLG. WITH 6"x4" FLG. REDUCER
M –	VENT PIPE DIAMETER	6" (SEE STD PLAN 805–04)
N –	WET WELL TOP REINFORCING	(SEE SHEET Nos. 105–S01 & 105–S02
O –	WET WELL TOP THICKNESS	(SEE SHEET Nos. 105–S01 & 105–S02
P –	PIPE SPOOL LENGTH EXITING WET WELL	6"x3'–10" LG. FLG. SPOOL (SEE PIPING LAYOUT THIS SHEET)

DESIGN REQUIREMENTS

1. DRY WEATHER FLOW: 49 GPM
2. WET WEATHER FLOW: 400 GPM
3. TOTAL NUMBER OF PUMPS: 2
4. NUMBER OF DUTY PUMPS: 1
5. NUMBER OF STANDBY PUMPS: 1
6. ⚠1 MIN. PUMP DESIGN CAPACITY: 400 GPM @ 133 Ft.
7. PUMP DISCHARGE: 4" FLG. WITH 4"x6" FLG. REDUCER
8. MOTOR RATING: 35 H.P., 60 HZ, 3 PHASE, 480 VOLTS
9. MOTOR RATED SPEED: 3520 R.P.M.

WATER LINE NOTES:

1. 1" PVC SHALL BE SCHEDULE 80 CONFORMING TO ASTM D1785.
2. PVC PIPE AND FITTINGS SHALL BE OF THE THREADED TYPE CONFORMING TO ASTM D2464.
3. STEEL PIPE SHALL BE SCHEDULE 40 GALVANIZED PIPE CONFORMING TO ASTM A53 WITH THREADED ENDS. FITTINGS SHALL CONFORM TO ASTM A–197.

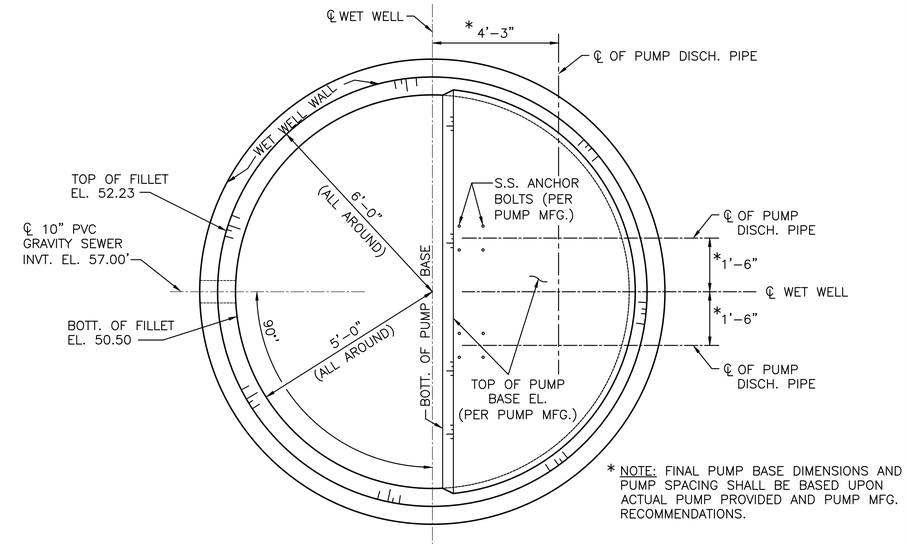

* NOTE: FINAL PUMP BASE DIMENSIONS AND PUMP SPACING SHALL BE BASED UPON ACTUAL PUMP PROVIDED AND PUMP MFG. RECOMMENDATIONS.

PUMP LAYOUT PLAN

SCALE: N.T.S.

PUMP STATION 105 REQUIRED PUMP CURVE (±5%)

FLOW (GPM)	SHUT OFF	300	500
HEAD (FT)	270 Ft.	169	213

PUMP STATION 105 – PUMP SCHEDULE

CAPACITY (GPM)	HEAD (FT)	MIN.EFF. (±5%)	RPM	PUMP DISCHARGE (IN)
400	133.0	53.0	3520	4"

⚠ ⚠

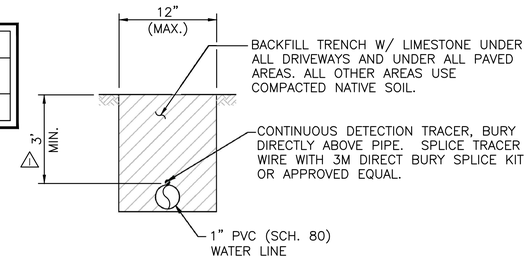

WATER LINE DETAIL

SCALE: N.T.S.

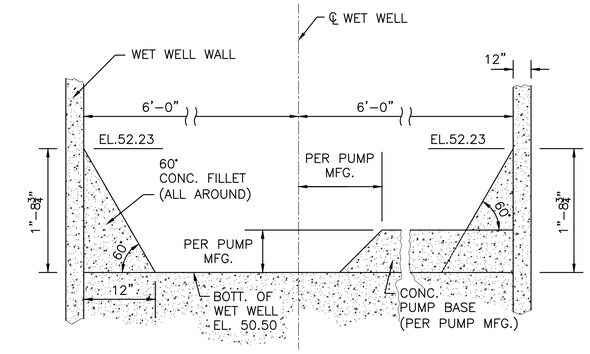

PUMP BASE AND 60° CONCRETE FILLET DETAIL

SCALE: N.T.S.

PUMP STATION 105 PUMP CONTROL SETTINGS AND DIMENSIONS

CONTROL POINT	ELEV.	HEIGHT*
100 YR FLOOD ELEVATION	71.50	252" (21'–0")
NATURAL GROUND @ SITE	68.50	216" (18'–0")
E11 – FORCE MAIN DISCHARGE HEADER ℄ EL.	74.00	282" (23'–6')
E10 – BOTTOM OF VALVE PIT	N/A	N/A
E19 – TOP OF WET WELL	72.50	264" (22'–0")
E8 – LOWEST INFLUENT INVERT	57.00	78" (6'–6")
E7 – HIGH LEVEL ALARM (FLOAT SWITCH)	57.00	78" (6'–6")
E6 – HIGH LEVEL ALARM/PUMP TWO ON	56.50	72" (6'–0")
E6 – PUMP ON TWO LAG PUMP ON	N/A	(LOCKED OUT)
E5 – LEAD PUMP ON	56.00	66" (5'–6")
E4 – PUMP OFF	54.50	48" (4'–0")
E3 – LOW LEVEL ALARM	54.00	42" (3'–6")
E2 – LOW–LOW LEVEL ALARM (FLOAT)	54.50	36" (3'–0")
E1 – WET WELL INVERT ELEVATION	50.50	0.00

* HEIGHT FROM INVERT OF WET WELL

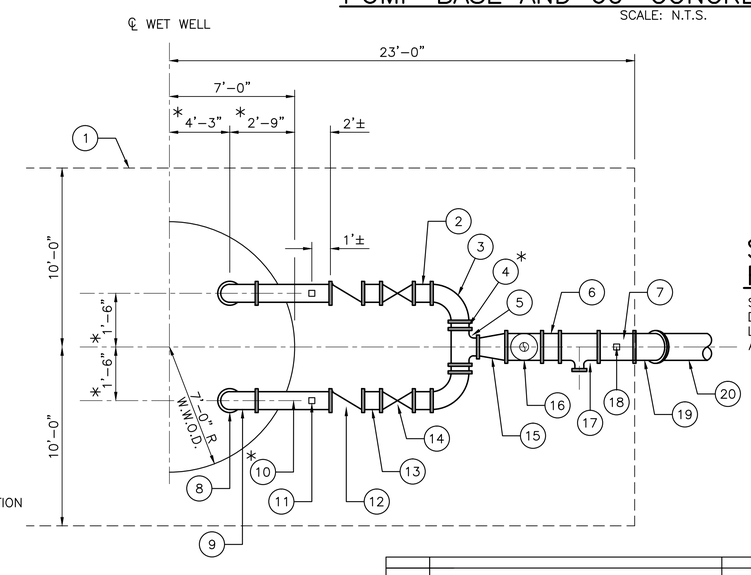

STATE OF LOUISIANA
JEROME M. KLIER
Reg. No. 11591
REGISTERED PROFESSIONAL ENGINEER IN CIVIL ENGINEERING
4-13-2016

STANDARD PLAN REFERENCE DRAWING NOTE:

SEE STANDARD PLAN 805–02, SHEET 1 OF 2, DATED JULY 12, 2013 FOR REFERENCE ITEM LOCATION AND OTHER PUMP STATION DETAILS AND REQUIREMENTS.

STANDARD PLAN NO.	DATED	SHEET NO.
805–02	AUGUST 1, 2011	2 OF 2

KEY:

1. 6" THICK PAD EL. 72.50 (SEE STD. PLAN 805–02, SH. 1 OF 2)
2. 6" FLG. SPOOL 12" LONG (TYP) ℄ EL. 73.96
3. 6" FLG. 90° LONG RADIUS ELBOW (TYP)
4. * 6" FLG. SPOOL 0'–6½" LONG CONNECTION PIECE (TYP)
5. 6"x6"x6" FLG. TEE ℄ EL. 73.96
6. 8" FLG. SPOOL 12" LONG (TYP) ℄ EL. 73.96
7. 8" FLG. SPOOL 24" LONG TAPPED 2" FOR DISC. PRESSURE TRANSMITTER
8. 6" DISC. PIPE TOP OF FLG. EL. 73.00
9. 6" FLG. 90° LONG RADIUS ELBOW (TYP)
10. * 6" FLG.x3'–10" LONG SPOOL (TYP) (FLG. END TO EXTEND APPOX. 2' BEYOND WET WELL O.D.) ℄ EL. 73.96
11. 1" THREADED TAP FOR PRESSURE SWITCH
12. 6" FLG. CHECK VALVE
13. 6" FLG. SPOOL 12" LONG (TYP) ℄ EL. 73.96
14. 6" FLG. GATE VALVE, NRS W/HANDWHEEL (TYP)
15. 6"x8" ECCENTRIC REDUCER INSTALL WITH FLAT SIDE ON BOTTOM
16. 8" FLG. SPOOL 24" LONG WITH 4" FLG. FABRICATED OUTLET FOR ARV ASSEMBLY
17. 8"x6" FLG. TEE FOR EMERGENCY CONNECTION
18. 1½" THREADED TAP FOR DISC. PRESSURE TRANSMITTER
19. 8" FLG. 45° LONG RADIUS ELBOW ℄ EL. 73.96
20. 8" FLG. X RESTRAINED FT. FORCE MAIN D.I.P.

DATE	DESCRIPTION	BY
	REVISIONS	

CONCRETE DUPLEX STATION DETAILS (TYPE I STATION)

ENGINEERING DIVISION
DEPARTMENT OF PUBLIC WORKS
CITY OF BATON ROUGE & PARISH OF EAST BATON ROUGE

DESIGNED	DRAWN	CHECKED	APPROVED
A. SCHULZE	G. VANNICE	R. WRIGHT	B. HARMON

805–02

SHT.	105–C04R
PARISH	EAST BATON ROUGE
CITY	BATON ROUGE
PROJECT	11–PS–MS–0035
DESIGNED J. M. KLIER	
CHECKED J. RICHARDSON	
DETAILED D. SMITH	
CHECKED D. ROSHTO	
DATE MARCH 2016	
SHEET	

NO.	DATE	REVISION DESCRIPTION	BY
1	6/24/16	REVISED PUMP REQUIREMENT PER ADDENDUM NO. 3	J.M.K.

MULTIPLE PUMP STATIONS HIGHWAY 61 – PLANK ROAD (AREA NFW–C–0009)

STANDARD PLAN 805–02, CONCRETE DUPLEX STATION DETAILS PUMP STATION NO. 105

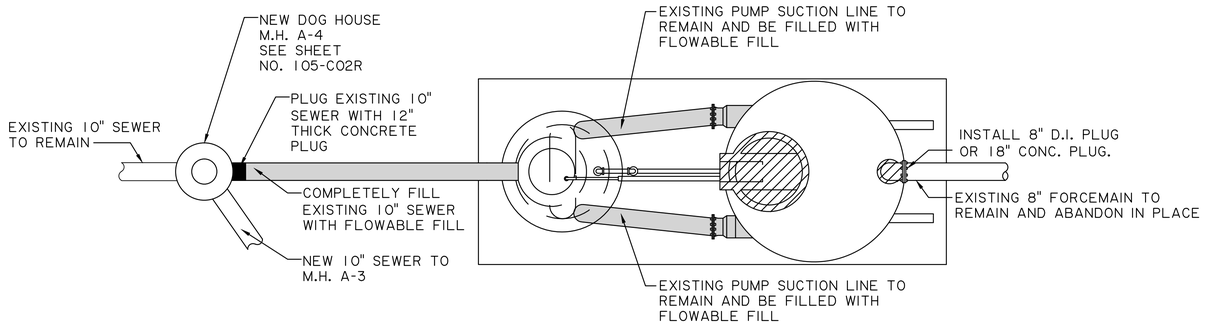

EXISTING PUMP STATION

SCALE: N.T.S.

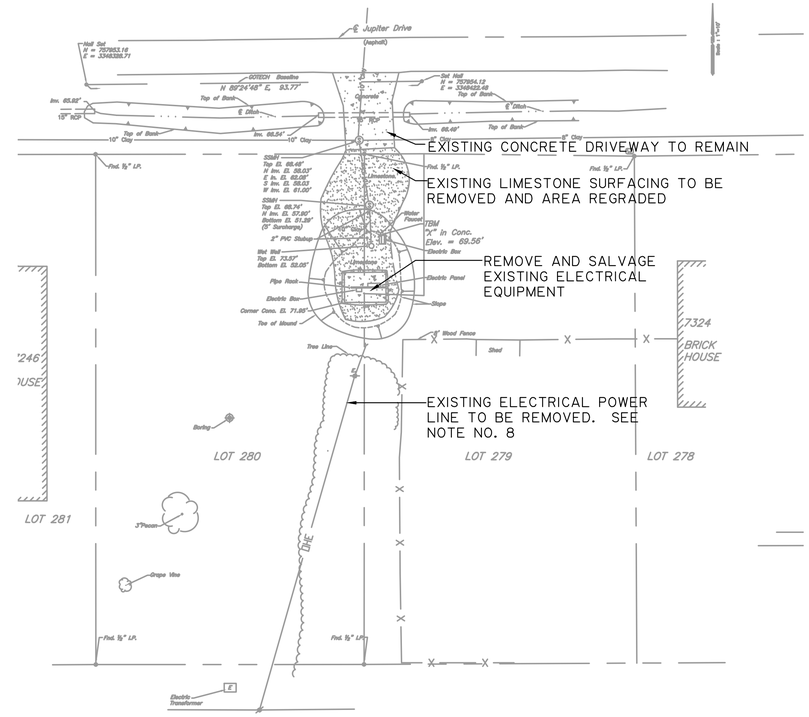

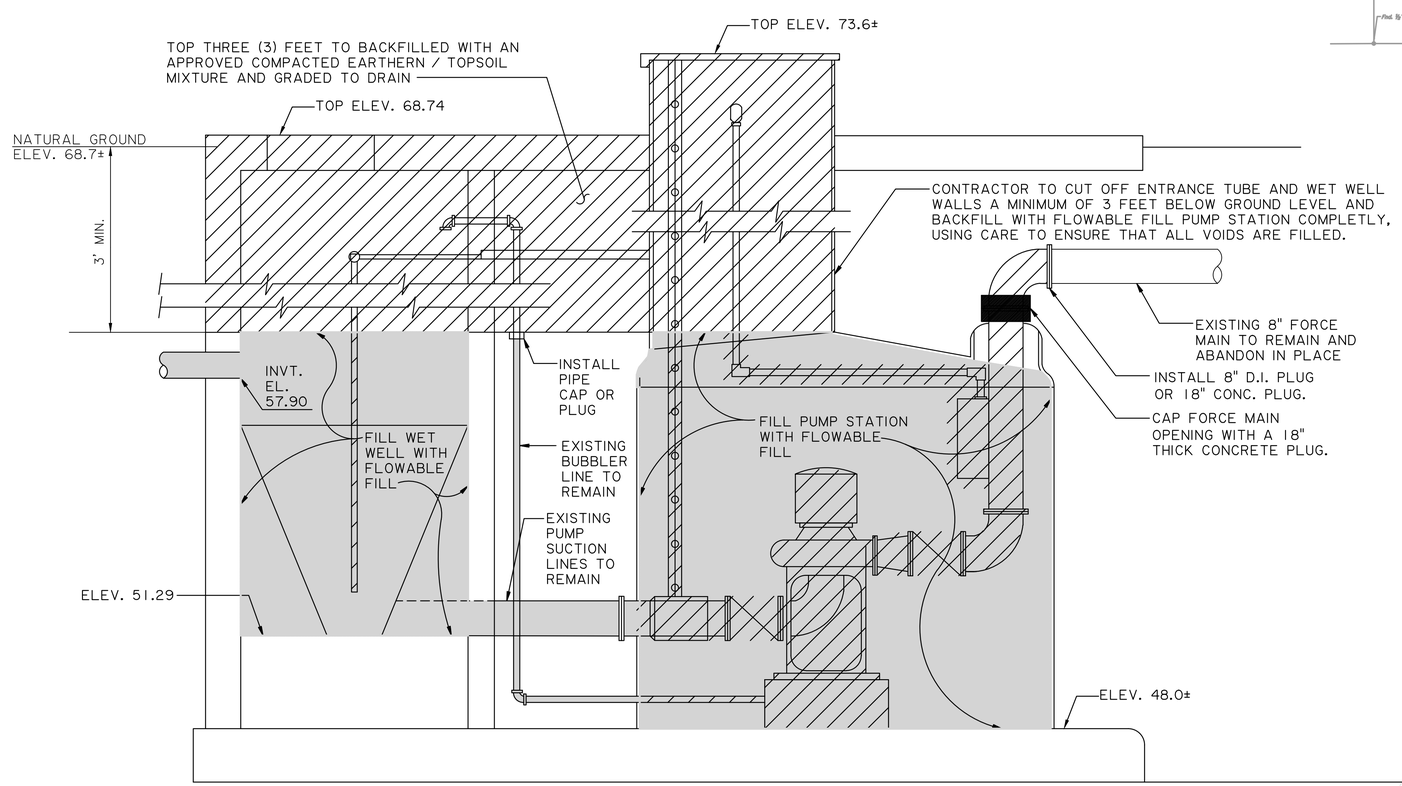

ELEVATION

SCALE: N.T.S.

DEMOLITION NOTES:

1. CONTRACTOR SHALL FIELD VERIFY EXISTING PUMP STATION FACILITIES, DIMENSIONS, EQUIPMENT, LOCATIONS, ETC. DRAWING NOT INTENDED TO BE ALL INCLUSIVE.
2. ALL PUMP STATION DEMOLITION AND SITE RESTORATION WILL BE PERFORMED IN ACCORDANCE WITH SECTION 820 OF THE SPECIFICATIONS.
3. EXISTING WATER SERVICE SHALL BE FIELD VERIFIED AND ABANDONED.
4. EXISTING CONTROL PANEL AND LIFT STATION ELECTRICAL EQUIPMENT AND WIRING SHALL BE REMOVED PER BELOW NOTES. THE CONTRACTOR SHALL PROVIDE A TEMPORARY INSTALLATION THAT MEETS ALL LOCAL REQUIREMENTS AND THE NEC CODE. ARTICLE 590 "TEMPORARY INSTALLATION".
5. THE CONTRACTOR SHALL COORDINATE TO INSTALL NEW EQUIPMENT AND DISCONNECT EXISTING EQUIPMENT WITH MINIMUM DOWNTIME.
6. THE CONTRACTOR SHALL COORDINATE WITH THE OWNER AND ENGINEER, AND SUBMIT A SEQUENCE OF CONSTRUCTION TO MEET THE ABOVE REQUIREMENT. THE OWNER AND ENGINEER RESERVE THE RIGHT TO APPROVE. DISAPPROVE OF REVISE AS DEEMED NECESSARY.
7. ALL EXISTING CONDUIT AND JUNCTION BOXES SHALL BE REMOVED. EXISTING UNDERGROUND SERVICE CONDUIT SHALL BE FILLED WITH FLOWABLE FILL AND ABANDONED. SEAL AND PATCH PENETRATION. USE UL LISTED MATERIALS.
8. EXISTING POLE AND SERVICE EQUIPMENT SHALL BE REMOVED IN COORDINATION WITH THE UTILITY COMPANY.
9. ALL WORK SHALL BE DONE IN STRICT ACCORDANCE WITH THE LATEST EDITION OF THE NEC CODE AND LOCAL REQUIREMENTS.
10. DEMOLISH ALL EXISTING ELECTRICAL CONDUIT AND WIRING BACK TO THEIR SOURCE OF ORIGIN.
11. EXISTING PUMP STATION DEMOLITION CANNOT BEGIN UNTIL NEW STATION IS OPERATIONAL.

LEGEND:

REMOVE AND DISPOSE OF, ABANDON IN PLACE AND/OR SALVAGE

STATE OF LOUISIANA
JEROME M. KLIER
Reg. No. 11591
REGISTERED PROFESSIONAL ENGINEER IN CIVIL ENGINEERING
4-13-2016

NO.	DATE	BY	REVISION DESCRIPTION
1	6/24/16	J.M.K.	GENERAL PLAN REV. ADDED PER ADDENDUM NO. 3

DESIGNED J. KLIER
CHECKED J. RICHARDSON
DETAILED D. ROSHTO
CHECKED J. KLIER
DATE MARCH 2016
SHEET

PARISH EAST BATON ROUGE
CITY BATON ROUGE
PROJECT 11-PS-MS-0035
SHT. 105-C05R

MULTIPLE PUMP STATIONS HIGHWAY 61 – PLANK ROAD
(AREA NFW-C-0009)

DEMOLITION PLAN
P.S. 105

GEC Gulf Engineers & Consultants

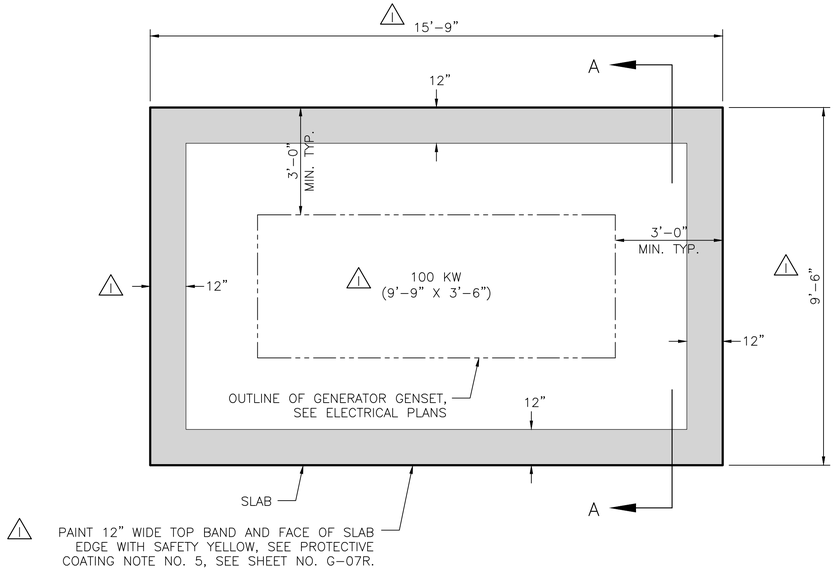

GENERATOR SLAB PLAN

SCALE: N.T.S.

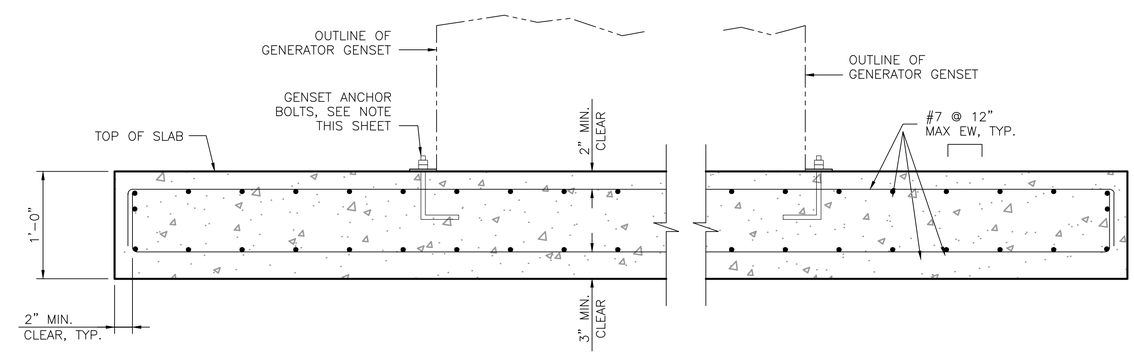

SECTION A-A

SCALE: N.T.S.

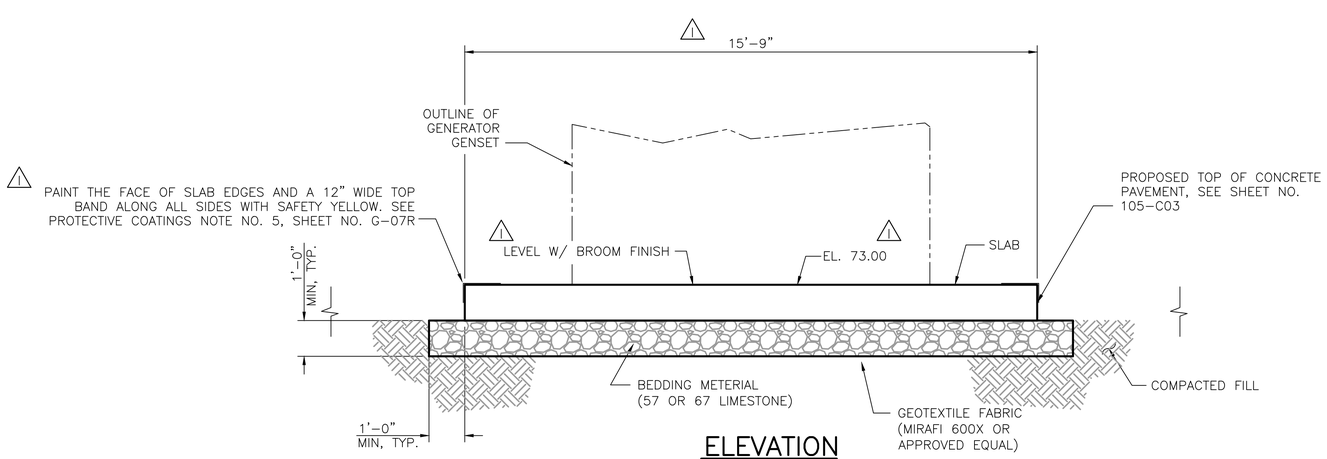

ELEVATION

SCALE: N.T.S.

STATE OF LOUISIANA
KEITH J. REBELLO
REG No. 24937
REGISTERED
PROFESSIONAL ENGINEER
ENGINEERING
April 13, 2016

NOTE:

REFER TO GENERATOR MANUFACTURER'S SPECIFICATIONS FOR GENSET ANCHOR BOLT SIZE AND LOCATIONS; SLAB CONDUIT PENETRATION LOCATIONS, AND OTHER MFG. DETAILS.

NO.	DATE	REVISION DESCRIPTION	BY
1	6/24/16	GEN. PLAN REV. ADDED PER ADDENDUM NO. 3	J.M.K.

DESIGNED K. REBELLO
CHECKED R. McLELLAN
DETAILED D. INWOOD
CHECKED K. REBELLO
DATE MARCH 2016
SHEET

PARISH EAST BATON ROUGE
CITY BATON ROUGE
PROJECT 11-PS-MS-0035

SHT. 105-S03R

MULTIPLE PUMP STATIONS HIGHWAY 61 – PLANK ROAD
(AREA NFW-C-0009)

GENERATOR SLAB AND DETAILS
PUMP STATION NO. 105

PUBLIC WORKS

GEC Gulf Engineers & Consultants

NOTE:

1. AFTER THE NEW P.S. 124 HAS BEEN PLACED INTO OPERATION THE EXIST. PUMP STATION, ELECT. CONTROL PANEL, ELEVATED STRUCTURE ETC SHALL BE REMOVED AND SITE RE-GRADED. (SEE SHEET NO 124-C05R)
2. CONTRACTOR SHALL BREAK-OUT EXIST. M.H. INVERT AND EAST SIDEWALK AS DIRECTED TO INSTALL NEW 15" PVC SEWER CONNECTION. ADDITIONALLY, CONTRACTOR SHALL PLUG EXIST. N/E SEWER LINE CONNECTION TO EXIST. P.S. AFTER THE NEW P.S. HAS BEEN PLACED INTO OPERATION.
3. EXIST. M.H. AT STA. 2+98 CONTRACTOR SHALL ALSO REMOVE THE EXIST. M.H. FRAME & COVER, AND SHALL REPLACE WITH A WATER TIGHT BOLT DOWN FRAME & COVER (SEE CPS 803-01).
4. ALL BURIED D.I.P. FORCE MAIN PIPE, FITTINGS AND VALVES SHALL BE OF THE RESTRAINED JOINT TYPE. AFTER INSTALLATION ALL RESTRAINED JOINTS SHALL BE PULLED OR EXTENDED TO REMOVE ANY JOINT SLACK.
5. ALL D.I.P. FORCE MAIN PIPE, FITTINGS, AND VALVES SHALL BE CLASS 250 AND CERAMIC LINED IN ACCORDANCE WITH SECTION 804 OF THE SPECIAL PROVISIONS. ALL BURIED D.I.P., FITTINGS AND VALVES SHALL ALSO BE POLYETHYLENE ENCASED IN ACCORDANCE WITH SECTION 804 OF THE SPECIAL PROVISIONS.

FLOOD INFORMATION
1. FIRM PANEL NO. 220058-0045E
2. FIRM DATE: MAY 2, 2008
3. FIRM FLOOD ZONE: AE
4. FIRM BASE FLOOD EL. 102 FT. NGVD
5. RECORD INUNDATION ? FT. NGVD

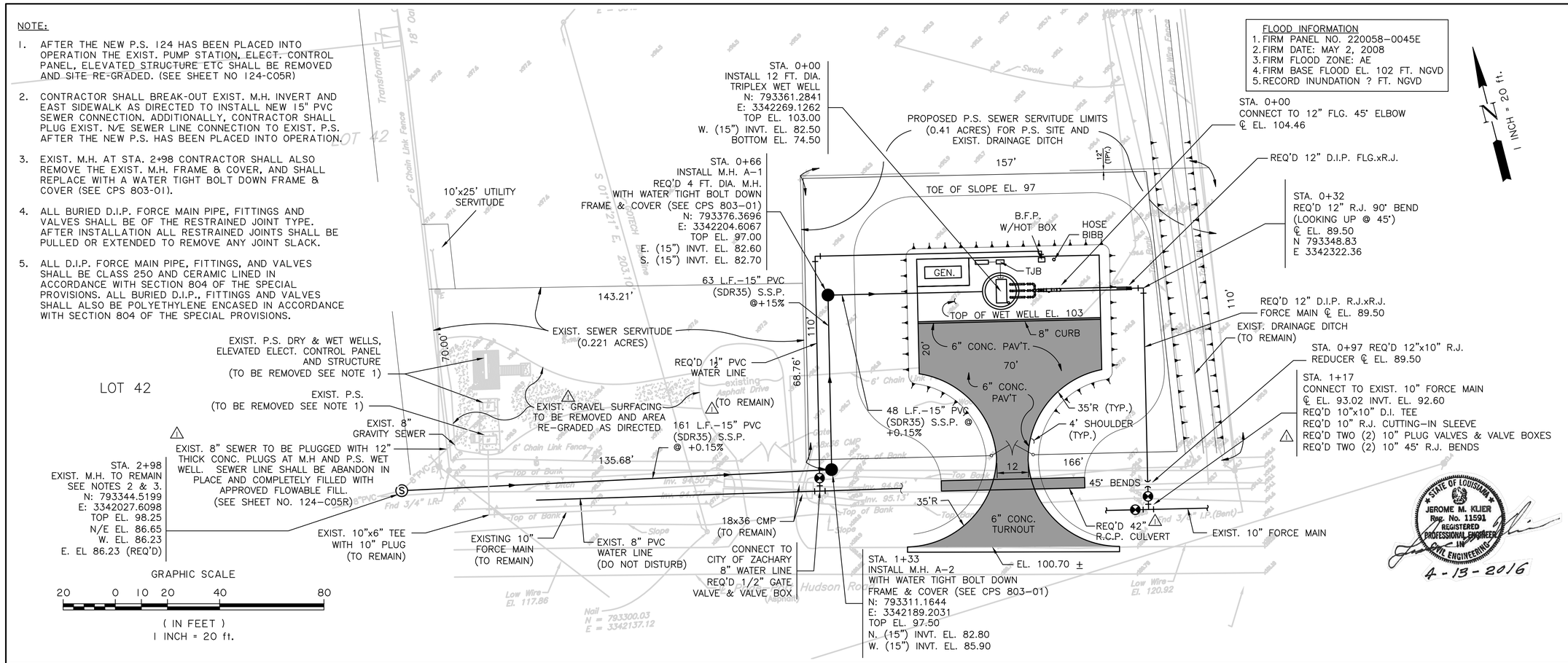

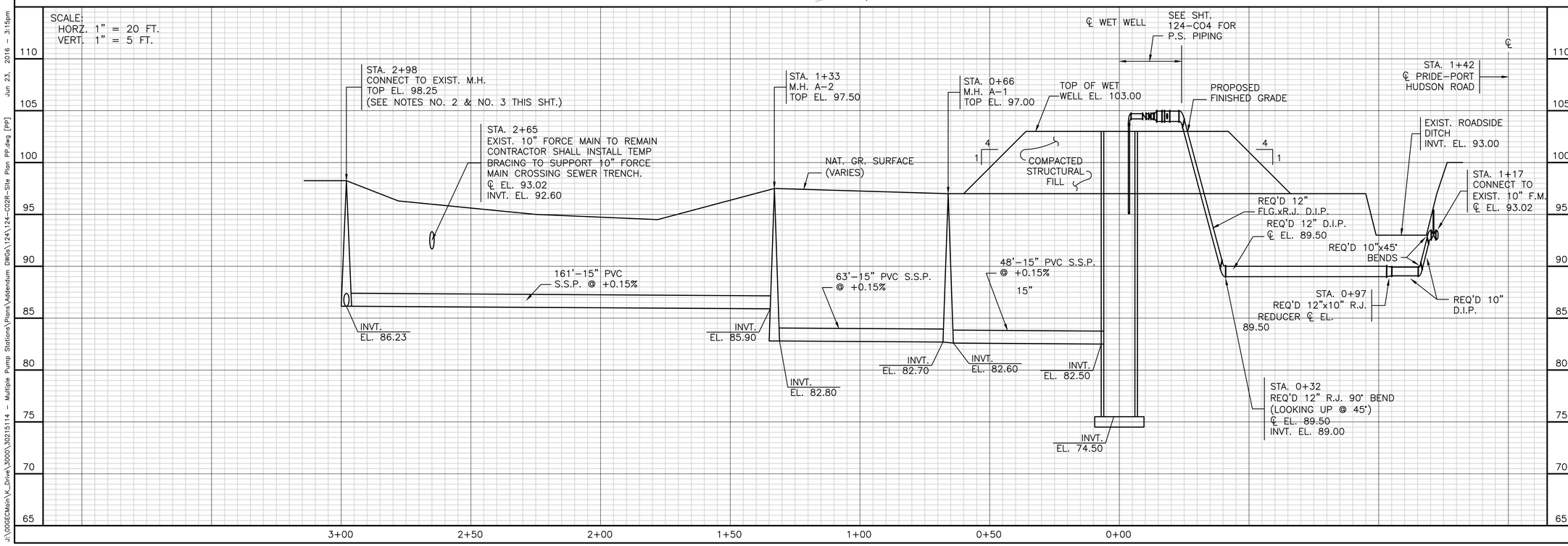

SHT.	124-C02R
PARISH	EAST BATON ROUGE
CITY	BATON ROUGE
PROJECT	11-PS-MS-0035
DESIGNED	J. KLIER
CHECKED	J. RICHARDSON
DETAILED	D. SMITH
CHECKED	D. ROSHTO
DATE	MARCH 2016
SHEET	

NO.	DATE	REVISION DESCRIPTION	BY
1	6/24/16	GENERAL PLAN REV PER ADDENDUM NO. 3	J.M.K.

MULTIPLE PUMP STATIONS HIGHWAY 61 - PLANK ROAD (AREA NFW-C-0009)

PROPOSED SITE PLAN IMPROVEMENTS PUMP STATION NO. 124

GEC Gulf Engineers & Consultants

J:\OGEOMain\K_Drive\3000\30215114 - Multiple Pump Stations\Plans\Addendum DWGs\124\124-C02R-Site Plan PP.dwg [PP] Jun 23, 2016 - 3:15pm

PUMP STATION 124

ITEM	DESCRIPTION	DIMENSIONS
A –	WET WELL BASE DIAMETER	228" (19'–0") (SEE SHEET NO. PS–124–S01)
B –	WET WELL OUTSIDE DIAMETER	168" (14'–0") (SEE SHEET NO. PS–124–S01)
C –	WET WELL INSIDE DIAMETER	144" (12'–0")
D –	CHECK VALVE (3 REQD.)	6" FLANGED
E –	GATE VALVE (3 REQD.)	6" FLANGED
F –	AIR RELEASE VALVE/VACUUM VALVE ASSEMBLY	4" (REQ'D 12"x12"x4" FLG. TEE)
G –	EMERGENCY CONNECTION DIAMETER	4" (REQ'D 12"x12"x4" FLG. TEE)
H –	FORCE MAIN DIAMETER	12" D.I.P.
I –	WET WELL BASE REINFORCING	(SEE SHEET No. 124–S01 & 124–S02)
J –	WET WELL BEDDING MATERIAL THICKNESS	12" (MIN.) (SEE 124–S01)
K –	WET WELL BASE THICKNESS	15" (1'–3") (SEE SHEET No. 124–S01 & 124–S02)
L –	DUCTILE IRON PIPE DIAMETER	6" FLG. WITH 6"x4" FLG. REDUCER
M –	VENT PIPE DIAMETER	6" (SEE STD. PLAN 805–04)
N –	WET WELL TOP REINFORCING	(SEE SHEET Nos. 124–S01 & 124–S02)
O –	WET WELL TOP THICKNESS	(SEE SHEET Nos. 124–S01 & 124–S02)
P –	PIPE SPOOL LENGTH EXISTING WET WELL	12"x4'–0" LG. FLG. SPOOL (SEE PIPING LAYOUT THIS SHEET)

DESIGN REQUIREMENTS

1. DRY WEATHER FLOW: 150 GPM
2. WET WEATHER FLOW: 1,066 GPM
3. TOTAL NUMBER OF PUMPS: 3
4. NUMBER OF DUTY PUMPS: 2
5. NUMBER OF STANDBY PUMPS: 1
6. MIN. PUMP DESIGN CAPACITY: 533 GPM @ 153 Ft.
7. PUMP DISCHARGE: 4" FLG. WITH 4"x6" FLG. REDUCER
8. MOTOR RATING: 35 H.P., 60 HZ, 3 PHASE, 480 VOLTS
9. MOTOR RATED SPEED: 1770 R.P.M.

WATER LINE NOTES:

1. 1" PVC SHALL BE SCHEDULE 80 CONFORMING TO ASTM D1785.
2. PVC PIPE AND FITTINGS SHALL BE OF THE THREADED TYPE CONFORMING TO ASTM D2464.
3. STEEL PIPE SHALL BE SCHEDULE 40 GALVANIZED PIPE CONFORMING TO ASTM A53 WITH THREADED ENDS. FITTINGS SHALL CONFORM TO ASTM A–197.

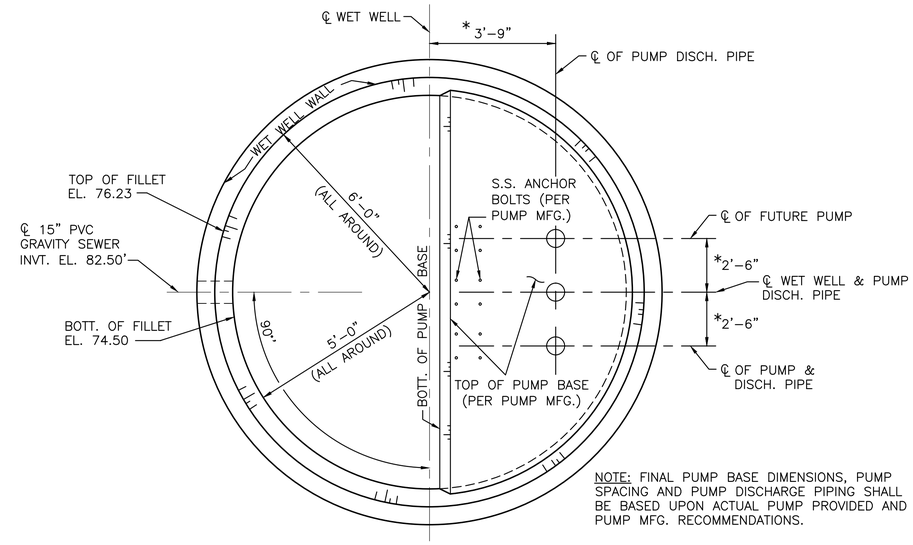

NOTE: FINAL PUMP BASE DIMENSIONS, PUMP SPACING AND PUMP DISCHARGE PIPING SHALL BE BASED UPON ACTUAL PUMP PROVIDED AND PUMP MFG. RECOMMENDATIONS.

PUMP LAYOUT PLAN

SCALE: N.T.S.

PUMP STATION 124 REQUIRED PUMP CURVE (±5%)

FLOW (GPM)	SHUT OFF	600	1,150
HEAD (FT)	210 Ft.	165	120

PUMP STATION 124 – PUMP SCHEDULE

CAPACITY (GPM)	HEAD (FT)	MIN.EFF. (±5%)	RPM	PUMP DISCHARGE (IN)
533	153	62.0	1770	4"

△1 △1

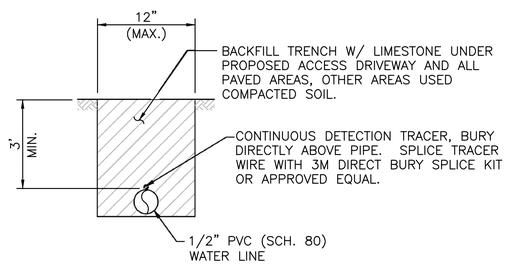

WATER LINE DETAIL

SCALE: N.T.S.

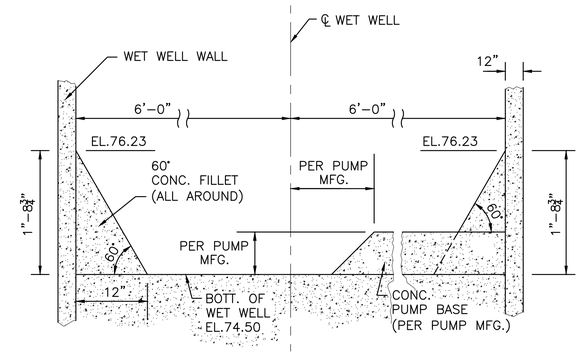

PUMP BASE AND 60° CONCRETE FILLET DETAIL

SCALE: N.T.S.

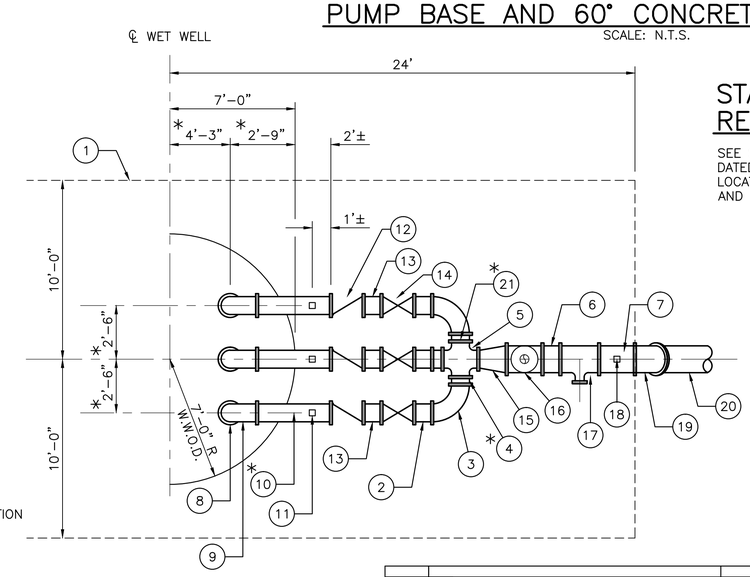

STANDARD PLAN REFERENCE DRAWING NOTE:

SEE STANDARD PLAN 805–03, SHEET 1 OF 2, DATED JULY 12, 2013 FOR REFERENCE ITEM LOCATION AND OTHER PUMP STATION DETAILS AND REQUIREMENTS.

STATE OF LOUISIANA
JEROME M. KLIER
Reg. No. 11591
REGISTERED
PROFESSIONAL ENGINEER
IN
CIVIL ENGINEERING

4-13-2016

PUMP STATION 124 PUMP CONTROL SETTINGS AND DIMENSIONS

CONTROL POINT	ELEV.	HEIGHT*
100 YR FLOOD ELEVATION	102.0	330" (27'–6")
NATURAL GROUND @ SITE	98.0	282" (23'–6")
E12 – FORCE MAIN DISCHARGE INVERT	94.00	234" (19'–6')
E11 – BOTTOM OF VALVE PIT	N/A	N/A
E10 – TOP OF WET WELL	103.0	342" (28'–6")
E9 – LOWEST INFLUENT INVERT	82.50	96" (8'–0")
E8 – HIGH/HIGH LEVEL ALARM (FLOAT SWITCH)	82.50	96" (8'–0")
E7 – HIGH LEVEL ALARM/STAND–BY PUMP ON	82.00	90" (7'–6")
E6 – LAG PUMP ON	81.50	84" (7'–0")
E5 – LEAD PUMP ON	80.00	66" (5'–6")
E4 – PUMP OFF	78.50	48" (4'–0")
E3 – LOW LEVEL ALARM	78.00	42" (3'–6")
E2 – LOW–LOW LEVEL ALARM (FLOAT)	77.50	36" (3'–0")
E1 – WET WELL INVERT ELEVATION	74.50	0.00

* HEIGHT FROM INVERT OF WET WELL

KEY:

1. 6" THICK PAD EL. 103.00 (SEE STD. PLAN 805–03, SH. 1 OF 2)
2. 6" FLG. SPOOL 12" LONG (TYP) ℄ EL. 104.46
3. 6" FLG. 90° LONG RADIUS ELBOW (TYP)
4. * 6" FLG. SPOOL 1'–6¾" LONG CONNECTION PIECE (TYP)
5. 6"x6" FLG. CROSS ℄ EL. 104.46
6. 12" FLG. SPOOL 12" LONG (TYP) ℄ EL. 104.46
7. 12" FLG. SPOOL 24" LONG TAPPED 1½" FOR DISC. PRESSURE TRANSMITTER
8. 6" DISC. PIPE TOP OF FLG. EL. 103.50
9. 6" FLG. 90° LONG RADIUS ELBOW (TYP)
10. * 6" FLG.x4'–4" LONG SPOOL (TYP) (FLG. END TO EXTEND APPOX. 2' BEYOND WET WELL O.D.) ℄ EL. 104.46
11. 1" THREADED TAP FOR PRESSURE SWITCH
12. 6" FLG. CHECK VALVE
13. 6" FLG. SPOOL 12" LONG (TYP) ℄ EL. 104.46
14. 6" FLG. GATE VALVE, NRS W/HANDWHEEL (TYP)
15. 6"x12" ECCENTRIC REDUCER INSTALL WITH FLAT SIDE ON BOTTOM
16. 12"x4" FLG. TEE (LOOKING UP) FOR ARV ASSEMBLY
17. 12"x4" FLG. TEE FOR EMERGENCY CONNECTION
18. 1½" THREADED TAP FOR DISC. PRESSURE TRANSMITTER
19. 12" FLG. 45° LONG RADIUS ELBOW ℄ EL. 104.46
20. 12" FLG. X RESTRAINED JT. FORCE MAIN D.I.P.
21. 6" BLIND FLG.

DATE	DESCRIPTION REVISIONS	BY

STANDARD PLAN NO.	DATED	SHEET NO.
805–03	AUGUST 1, 2011	2 OF 2

CONCRETE TRIPLEX STATION DETAILS (TYPE I OR TYPE II STATION)

ENGINEERING DIVISION
DEPARTMENT OF PUBLIC WORKS
CITY OF BATON ROUGE & PARISH OF EAST BATON ROUGE

DESIGNED	DRAWN	CHECKED	APPROVED
A. SCHULZE	G. VANNICE	R. WRIGHT	B. HARMON

805–03

SHT. 124–C04R

PARISH: EAST BATON ROUGE
CITY: BATON ROUGE
PROJECT: 11–PS–MS–0035

DESIGNED J. M. KLIER
CHECKED J. RICHARDSON
DETAILED D. SMITH
CHECKED D. ROSHTO
DATE MARCH 2016
SHEET

NO.	DATE	REVISION DESCRIPTION	BY
1	6/24/16	PUMP SCHEDULE REVISED PER ADDENDUM NO. 3	J.M.K.

MULTIPLE PUMP STATIONS HIGHWAY 61 – PLANK ROAD (AREA NFW–C–0009)

STANDARD PLAN 805–03, CONCRETE TRIPLEX STATION DETAILS PUMP STATION NO. 124

GEC Gulf Engineers & Consultants

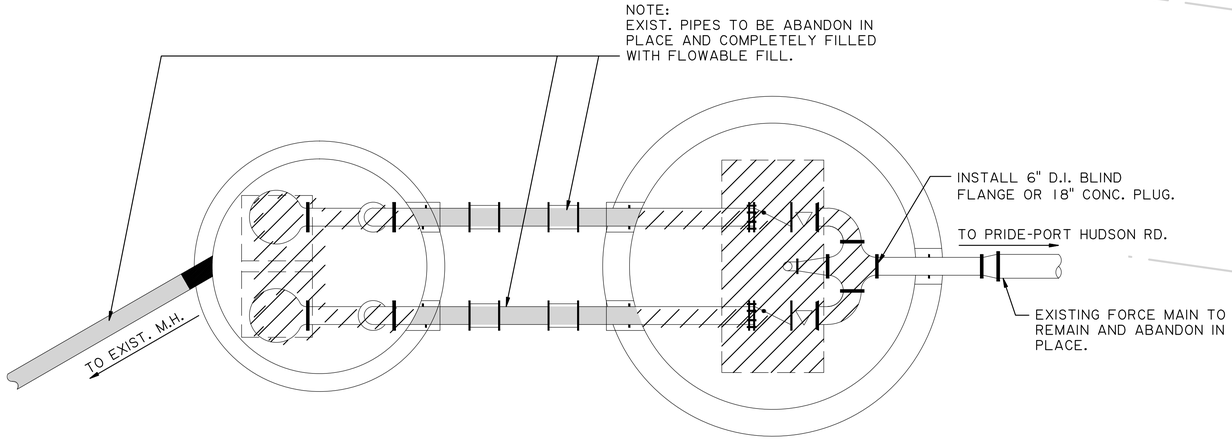

EXISTING PUMP STATION 124

SCALE: N.T.S.

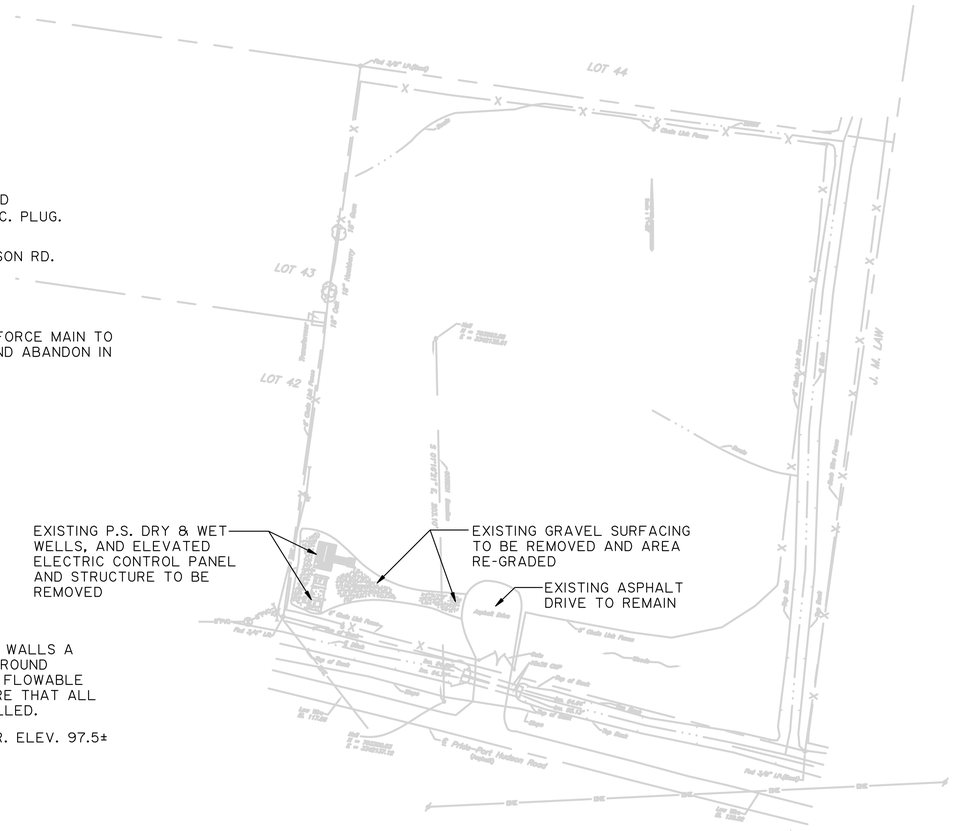

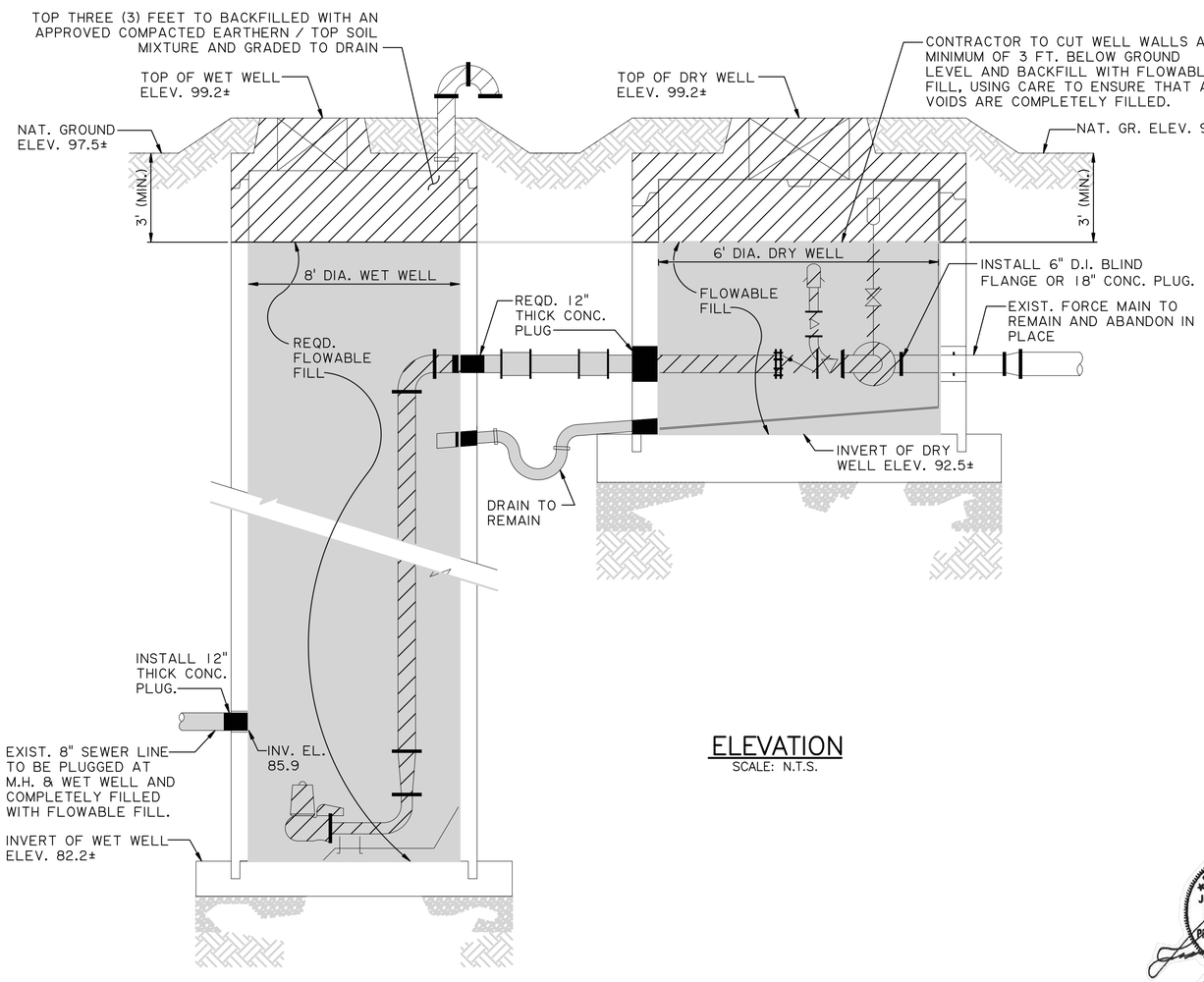

ELEVATION

SCALE: N.T.S.

LEGEND:

REMOVE AND DISPOSE OF, AND/OR SALVAGE

DEMOLITION NOTES:

1. CONTRACTOR SHALL FIELD VERIFY EXISTING PUMP STATION FACILITIES, DIMENSIONS, EQUIPMENT, LOCATIONS, ETC. DRAWING NOT INTENDED TO BE ALL INCLUSIVE.
2. ALL PUMP STATION DEMOLITION AND SITE RESTORATION WILL BE PERFORMED IN ACCORDANCE WITH SECTION 820 OF THE SPECIFICATIONS.
3. EXISTING WATER SERVICE SHALL BE FIELD VERIFIED AND ABANDONED IN PLACE.
4. EXISTING CONTROL PANEL AND LIFT STATION ELECTRICAL EQUIPMENT AND WIRING SHALL BE REMOVED PER BELOW NOTES. THE CONTRACTOR SHALL PROVIDE A TEMPORARY INSTALLATION THAT MEETS ALL LOCAL REQUIREMENTS AND THE NEC CODE. ARTICLE 590 "TEMPORARY INSTALLATION".
5. THE CONTRACTOR SHALL COORDINATE TO INSTALL NEW EQUIPMENT AND DISCONNECT EXISTING EQUIPMENT WITH MINIMUM DOWNTIME.
6. THE CONTRACTOR SHALL COORDINATE WITH THE OWNER AND ENGINEER, AND SUBMIT A SEQUENCE OF CONSTRUCTION TO MEET THE ABOVE REQUIREMENT. THE OWNER AND ENGINEER RESERVE THE RIGHT TO APPROVE. DISAPPROVE OF REVISE AS DEEMED NECESSARY.
7. ALL EXISTING CONDUIT AND JUNCTION BOXES SHALL BE REMOVED. EXISTING UNDERGROUND SERVICE CONDUIT SHALL BE FILLED WITH FLOWABLE FILL AND ABANDONED. SEAL AND PATCH PENETRATION. USE UL LISTED MATERIALS.
8. EXISTING POLE AND SERVICE EQUIPMENT SHALL BE REMOVED IN COORDINATION WITH THE UTILITY COMPANY.
9. ALL WORK SHALL BE DONE IN STRICT ACCORDANCE WITH THE LATEST EDITION OF THE NEC CODE AND LOCAL REQUIREMENTS.
10. DEMOLISH ALL EXISTING ELECTRICAL CONDUIT AND WIRING BACK TO THEIR SOURCE OF ORIGIN.
11. EXISTING PUMP STATION DEMOLITION CANNOT BEGIN UNTIL NEW STATION IS OPERATIONAL.

STATE OF LOUISIANA
JEROME M. KLIER
Reg. No. 11591
REGISTERED PROFESSIONAL ENGINEER IN CIVIL ENGINEERING
4-13-2016

NO.	DATE	REVISION DESCRIPTION	BY
1	6/24/16	GENERAL PLAN REV PER ADDENDUM NO. 3	J.M.K.

DESIGNED K. REBELLO
CHECKED R. McLELLAN
DETAILED D. SMITH
CHECKED D. ROSHTO
DATE MARCH 2016
SHEET

PARISH EAST BATON ROUGE
CITY BATON ROUGE
PROJECT 11-PS-MS-0035

SHT. 124-C05R

MULTIPLE PUMP STATIONS HIGHWAY 61 – PLANK ROAD (AREA NFW-C-0009)

DEMOLITION PLAN
PUMP STATION NO. 124

GEC Gulf Engineers & Consultants

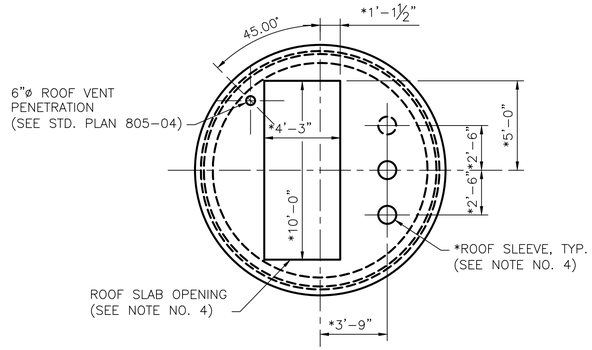

PUMP STATION WET WELL PLAN

SCALE: 1/4" = 1'-0"

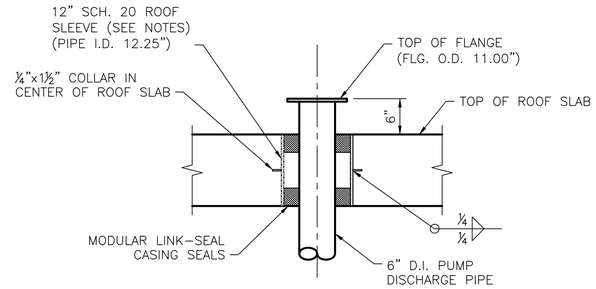

12" ROOF PENETRATIONS

SCALE: 1" = 1'-0"

NOTES:

1. SCHEDULE 40 STAINLESS STEEL PIPE SLEEVE. COORDINATE ROOF SLEEVE DIAMETER WITH MODULAR CASING SEAL MANUFACTURER.
2. USE TWO SETS OF CASING SEALS. ONE AT EACH FACE OF ROOF.
3. * CONC. PUMP BASE, PUMP & DISCHARGE PIPE SPACING SHOWN IS BASED UPON TENTATIVE PUMP SELECTION. FINAL BASE DIMENSIONS AND FILLETS WILL BE BASED UPON ACTUAL PUMP PROVIDED AND PUMP MFG. RECOMMENDATIONS.
4. * THE EXACT LOCATION OF THE ROOF PENETRATIONS AND HATCH REQUIRED SIZE (WxL) SHALL BE DETERMINED BY THE PUMP MFG.
5. THE INTERIOR AND EXTERIOR SURFACES OF THE WET WELL AND THE UNDERSIDE SURFACE OF THE ROOF SLAB SHALL BE COATED IN ACCORDANCE WITH SECTION 822 OF THE SPECIFICATIONS SPECIAL PROVISIONS. SEE SHEET NO. G-07.
6. IN LIEU OF CAST-IN-PLACE WET WELL CONSTRUCTION THE CONTRACTOR MAY FURNISH A PRECAST CONCRETE WET WELL, TOP (ROOF) SLAB AND BASE SLAB CONFORMING TO SECTIONS: 805-14; 805-49.1 & 805-50.1 OF THE SPECIFICATIONS SPECIAL PROVISIONS.

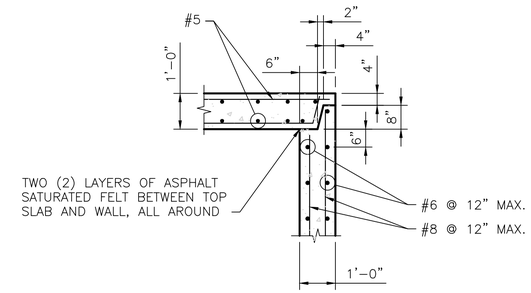

1 / 124-S01 DETAIL

SCALE: 1/2" = 1'-0"

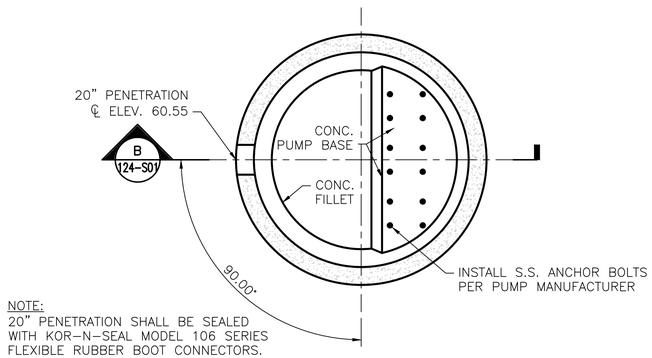

NOTE:
20" PENETRATION SHALL BE SEALED WITH KOR-N-SEAL MODEL 106 SERIES FLEXIBLE RUBBER BOOT CONNECTORS.

A / 124-S02 SECTION

SCALE: 1/4" = 1'-0"

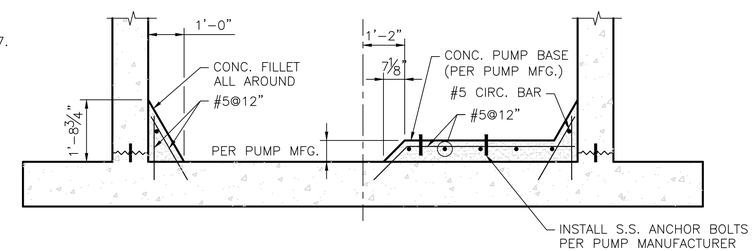

PUMP BASE & 60° CONCRETE FILLET DETAIL

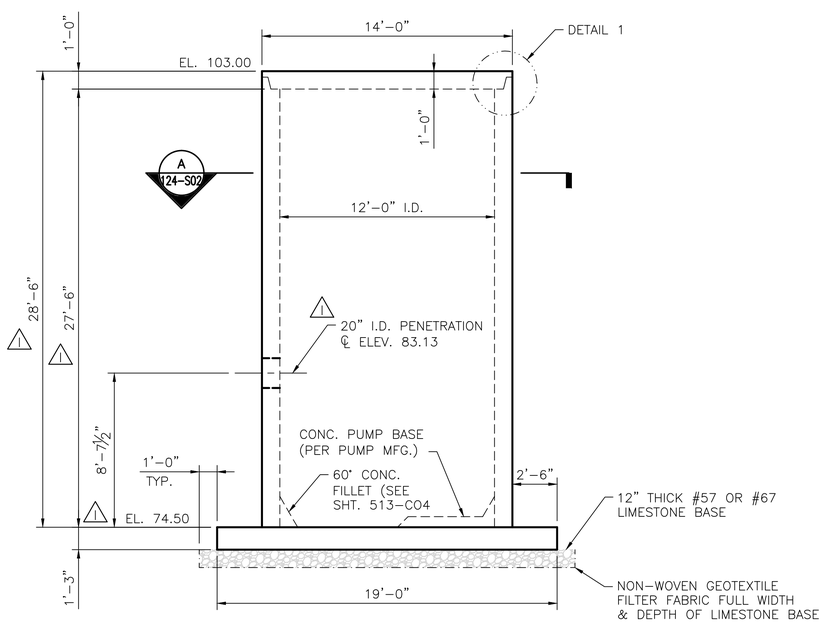

PUMP STATION WET WELL ELEVATION

SCALE: N.T.S.

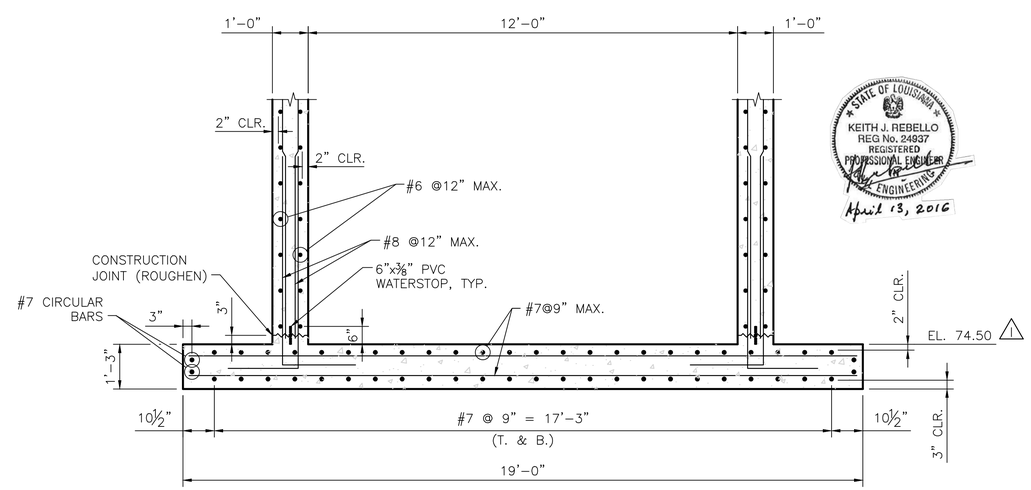

STATE OF LOUISIANA
KEITH J. REBELLO
REG No. 24937
REGISTERED PROFESSIONAL ENGINEER
ENGINEERING
April 13, 2016

B / 124-S01 SECTION

SCALE: 1/2" = 1'-0"

SHT. 124-S01R

PARISH: EAST BATON ROUGE
CITY: BATON ROUGE
PROJECT: 11-PS-MS-0035

DESIGNED K. REBELLO
CHECKED R. McLELLAN
DETAILED D. INWOOD
CHECKED K. REBELLO
DATE MARCH 2016
SHEET

NO.	DATE	REVISION DESCRIPTION	BY
1	6/24/16	GEN. PLAN REV. ADDED PER ADDENDUM NO. 3	J.M.K.

MULTIPLE PUMP STATIONS HIGHWAY 61 – PLANK ROAD (AREA NFW-C-0009)

WET WELL STRUCTURAL DETAILS
PUMP STATION NO. 124

GEC Gulf Engineers & Consultants

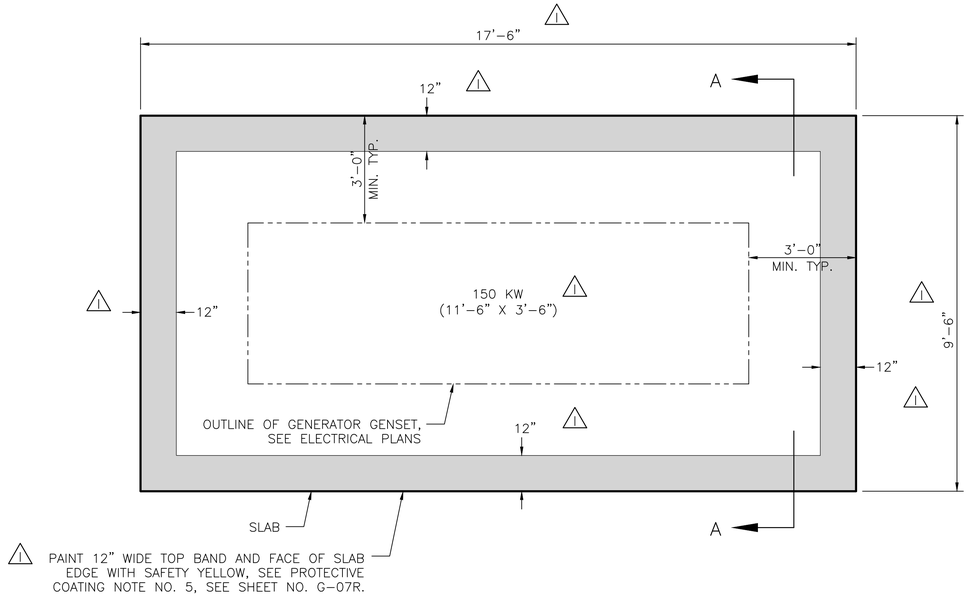

GENERATOR SLAB PLAN

SCALE: N.T.S.

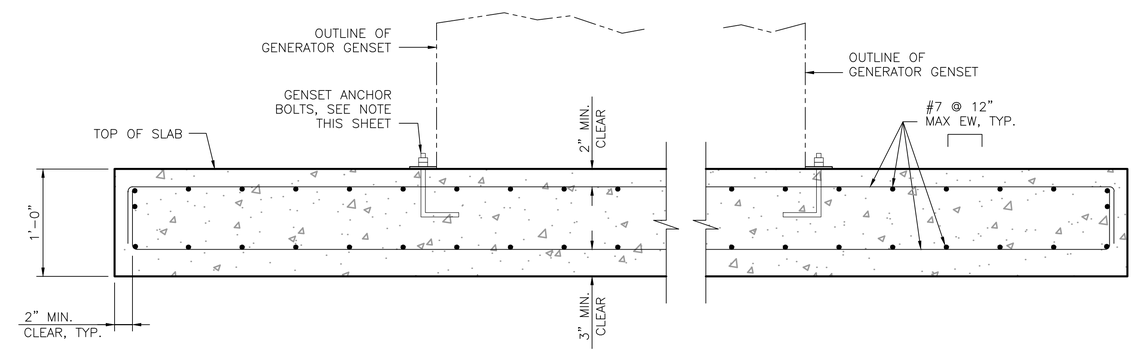

SECTION A–A

SCALE: N.T.S.

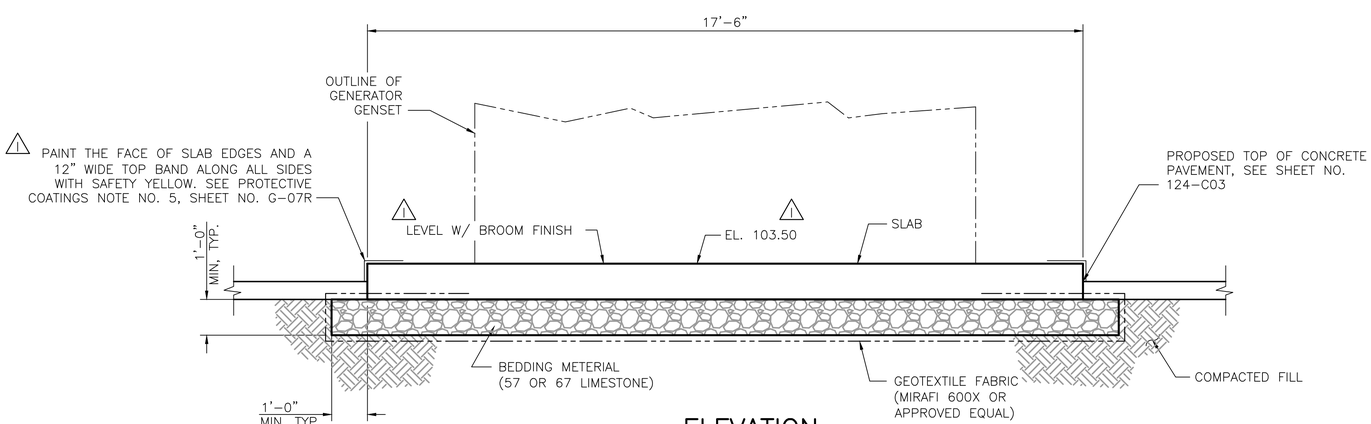

ELEVATION

SCALE: N.T.S.

STATE OF LOUISIANA
KEITH J. REBELLO
REG No. 24937
REGISTERED
PROFESSIONAL ENGINEER
ENGINEERING
April 13, 2016

NOTE:

REFER TO GENERATOR MANUFACTURER'S SPECIFICATIONS FOR GENSET ANCHOR BOLT SIZE AND LOCATIONS; SLAB CONDUIT PENETRATION LOCATIONS, AND OTHER MFG. DETAILS.

SHT. 124-S03R

PARISH: EAST BATON ROUGE
CITY: BATON ROUGE
PROJECT: 11-PS-MS-0035

DESIGNED: K. REBELLO
CHECKED: R. McLELLAN
DETAILED: D. INWOOD
CHECKED: K. REBELLO
DATE: MARCH 2016
SHEET: J.M.K.
BY:

NO.	DATE	REVISION DESCRIPTION
1	6/24/16	GEN. PLAN REV. ADDED PER ADDENDUM NO. 3

PUBLIC WORKS

MULTIPLE PUMP STATIONS HIGHWAY 61 – PLANK ROAD
(AREA NFW-C-0009)

GENERATOR SLAB AND DETAILS
PUMP STATION NO. 124

CITY OF BATON ROUGE · BATON ROUGE · PARISH OF EAST BATON ROUGE

GEC
Gulf Engineers & Consultants

PUMP STATION 513

ITEM	DESCRIPTION	DIMENSIONS
A –	WET WELL BASE DIAMETER	228" (19'–0") (SEE SHEET NO. PS–513–S01)
B –	WET WELL OUTSIDE DIAMETER	168" (14'–0") (SEE SHEET NO. PS–513–S01)
C –	WET WELL INSIDE DIAMETER	144" (12'–0")
D –	CHECK VALVE (3 REQD.)	12" FLANGED
E –	GATE VALVE (3 REQD.)	12" FLANGED
F –	AIR RELEASE VALVE/VACUUM VALVE ASSEMBLY	4" (REQ'D 18"x24" LG. SPOOL W/4" FAB. OUTLET)
G –	EMERGENCY CONNECTION DIAMETER	6" (REQ'D 18"x18"x6" FLG. TEE)
H –	FORCE MAIN DIAMETER	18" D.I.P.
I –	WET WELL BASE REINFORCING	(SEE SHEET No. 513–S01 & 513–S02)
J –	WET WELL BEDDING MATERIAL THICKNESS	12" (MIN.) (SEE 513–S01)
K –	WET WELL BASE THICKNESS	15" (1'–3") (SEE SHEET No. 513–S01 & 513–S02)
L –	DUCTILE IRON PIPE DIAMETER	12" FLG. WITH 12"x8" FLG. REDUCER
M –	VENT PIPE DIAMETER	6" (SEE STD. PLAN 805–04)
N –	WET WELL TOP REINFORCING	(SEE SHEET Nos. 513–S01 & 513–S02)
O –	WET WELL TOP THICKNESS	(SEE SHEET Nos. 513–S01 & 513–S02)
P –	PIPE SPOOL LENGTH EXISTING WET WELL	12"x4'–0" LG. FLG. SPOOL (SEE PIPING LAYOUT THIS SHEET)

DESIGN REQUIREMENTS

1. DRY WEATHER FLOW: 367 GPM
2. WET WEATHER FLOW: 4,000 GPM
3. TOTAL NUMBER OF PUMPS: 3
4. NUMBER OF DUTY PUMPS: 2
5. NUMBER OF STANDBY PUMPS: 1
6. MIN. PUMP DESIGN CAPACITY: 2,000 GPM @ 192 Ft.
7. PUMP DISCHARGE: 8" FLG. WITH 8"x12" FLG. REDUCER
8. MOTOR RATING: 185 H.P., 60 HZ, 3 PHASE, 480 VOLTS
9. MOTOR RATED SPEED: 1785 R.P.M.

WATER LINE NOTES:

1. 1" PVC SHALL BE SCHEDULE 80 CONFORMING TO ASTM D1785.
2. PVC PIPE AND FITTINGS SHALL BE OF THE THREADED TYPE CONFORMING TO ASTM D2464.
3. STEEL PIPE SHALL BE SCHEDULE 40 GALVANIZED PIPE CONFORMING TO ASTM A53 WITH THREADED ENDS. FITTINGS SHALL CONFORM TO ASTM A–197.

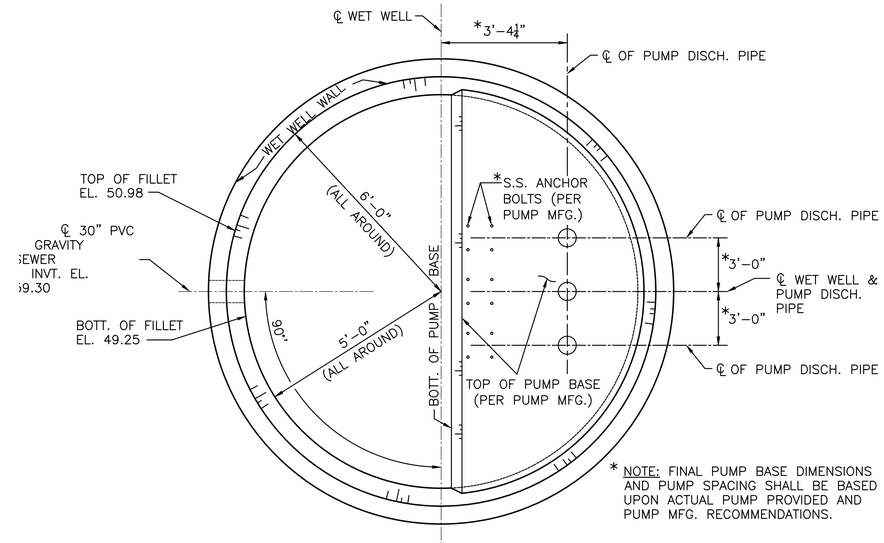

* NOTE: FINAL PUMP BASE DIMENSIONS AND PUMP SPACING SHALL BE BASED UPON ACTUAL PUMP PROVIDED AND PUMP MFG. RECOMMENDATIONS.

PUMP LAYOUT PLAN

SCALE: N.T.S.

PUMP STATION 513 REQUIRED PUMP CURVE (±5%)

FLOW (GPM)	SHUT OFF	2,000	2,400
HEAD (FT)	265 Ft.	86	102

PUMP STATION 513 – PUMP SCHEDULE

CAPACITY (GPM)	HEAD (FT)	MIN.EFF. (±5%)	RPM	PUMP DISCHARGE (IN)
2,000	192	64.0	1785	8"

PUMP STATION 513 PUMP CONTROL SETTINGS AND DIMENSIONS

CONTROL POINT	ELEV.	HEIGHT*
100 YR FLOOD ELEVATION	72.00	273" (22'–9")
NATURAL GROUND @ SITE	71.00	261" (21'–9")
E12 – FORCE MAIN DISCHARGE INVERT	76.10	322¼" (26'–10¼")
E11 – BOTTOM OF VALVE PIT	N/A	N/A
E10 – TOP OF WET WELL	74.52	303¼" (25'–3¼")
E9 – LOWEST INFLUENT INVERT	59.30	120⅝" (10'–0⅝")
E8 – HIGH/HIGH LEVEL ALARM (FLOAT SWITCH)	59.30	120⅝" (10'–0⅝")
E7 – HIGH LEVEL ALARM/STAND–BY PUMP ON	58.80	114⅝" (9'–6⅝")
E6 – LAG PUMP ON	58.30	108⅝" (9'–0⅝")
E5 – LEAD PUMP ON	57.30	96⅝" (8'–0⅝")
E4 – PUMP OFF	53.75	54" (4'–6")
E3 – LOW LEVEL ALARM	53.25	48" (4'–6")
E2 – LOW–LOW LEVEL ALARM (FLOAT)	52.75	42" (3'–6")
E1 – WET WELL INVERT ELEVATION	49.25	0.00

* HEIGHT FROM INVERT OF WET WELL

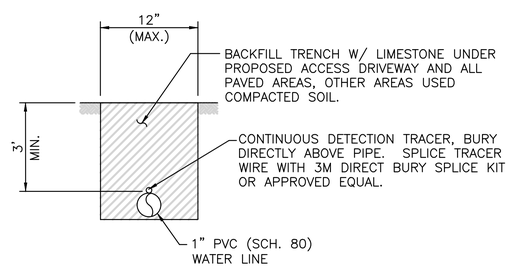

WATER LINE DETAIL

SCALE: N.T.S.

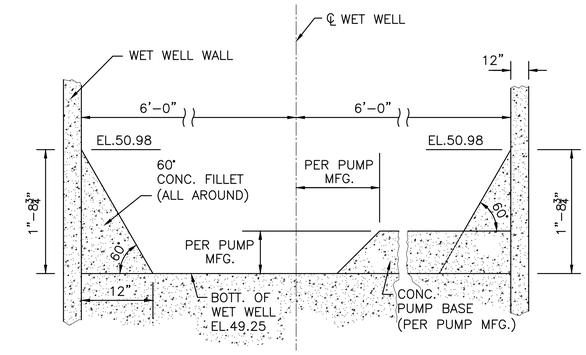

PUMP BASE AND 60° CONCRETE FILLET DETAIL

SCALE: N.T.S.

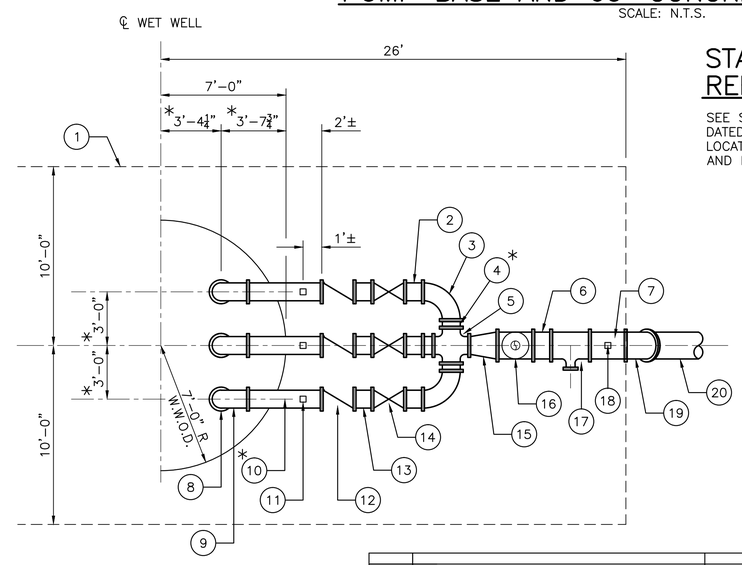

STANDARD PLAN REFERENCE DRAWING NOTE:

SEE STANDARD PLAN 805–03, SHEET 1 OF 2, DATED JULY 12, 2013 FOR REFERENCE ITEM LOCATION AND OTHER PUMP STATION DETAILS AND REQUIREMENTS.

STATE OF LOUISIANA
JEROME M. KLIER
Reg. No. 11591
REGISTERED PROFESSIONAL ENGINEER IN CIVIL ENGINEERING
4-13-2016

KEY:

1. 6" THICK PAD EL. 74.52 (SEE STD. PLAN 805–03, SH. 1 OF 2)
2. 12" FLG. SPOOL 12" LONG (TYP) ℄ EL. 56.60
3. 12" FLG. 90° LONG RADIUS ELBOW (TYP)
4. * 12" FLG. SPOOL 5" LONG CONNECTION PIECE (TYP)
5. 12"x12" FLG. CROSS ℄ EL. 76.60
6. 18" FLG. SPOOL 12" LONG (TYP) ℄ EL. 76.60
7. 18" FLG. SPOOL 24" LONG TAPPED 2" FOR DISC. PRESSURE TRANSMITTER
8. 12" DISC. PIPE TOP OF FLG. EL. 75.02
9. 12" FLG. 90° LONG RADIUS ELBOW (TYP)
10. * 12" FLG.x4'–0" LONG SPOOL (TYP) (FLG. END TO EXTEND APPOX. 2' BEYOND WET WELL O.D.) ℄ EL. 76,60
11. 1" THREADED TAP FOR PRESSURE SWITCH
12. 12" FLG. CHECK VALVE
13. 12" FLG. SPOOL 12" LONG (TYP) ℄ EL. 76.60
14. 12" FLG. GATE VALVE, NRS W/HANDWHEEL (TYP)
15. 12"x18" ECCENTRIC REDUCER INSTALL WITH FLAT SIDE ON BOTTOM
16. 18" FLG. SPOOL 24" LONG WITH 4" FLG. FABRICATED OUTLET FOR ARV ASSEMBLY
17. 18"x6" FLG. TEE FOR EMERGENCY CONNECT
18. 2" THREADED TAP FOR DISC. PRESSURE TRANSMITTER
19. 18" FLG. 45° LONG RADIUS ELBOW ℄ EL. 76.60
20. 18" FLG. X RESTRAINED FT. FORCE MAIN D.

DATE	DESCRIPTION REVISIONS	BY

STANDARD PLAN NO.	DATED	SHEET NO.
805–03	AUGUST 1, 2011	2 OF 2

CONCRETE TRIPLEX STATION DETAILS (TYPE I OR TYPE II STATION)

ENGINEERING DIVISION
DEPARTMENT OF PUBLIC WORKS
CITY OF BATON ROUGE & PARISH OF EAST BATON ROUGE

DESIGNED	DRAWN	CHECKED	APPROVED
A. SCHULZE	G. VANNICE	R. WRIGHT	B. HARMON

805–03

SHT.	513–C05R
PARISH	EAST BATON ROUGE
CITY	BATON ROUGE
PROJECT	11–PS–MS–0035
DESIGNED / CHECKED	J. M. KLIER / J. RICHARDSON
DETAILED / CHECKED	D. SMITH / D. ROSHTO
DATE / SHEET	MARCH 2016

NO.	DATE	REVISION DESCRIPTION	BY
1	6/24/16	REVISED PUMP SCH. PER ADDENDUM NO. 3	J.M.K.

MULTIPLE PUMP STATIONS HIGHWAY 61 – PLANK ROAD (AREA NFW–C–0009)

STANDARD PLAN 805–03, CONCRETE TRIPLEX STATION DETAILS PUMP STATION NO. 513

GEC Gulf Engineers & Consultants

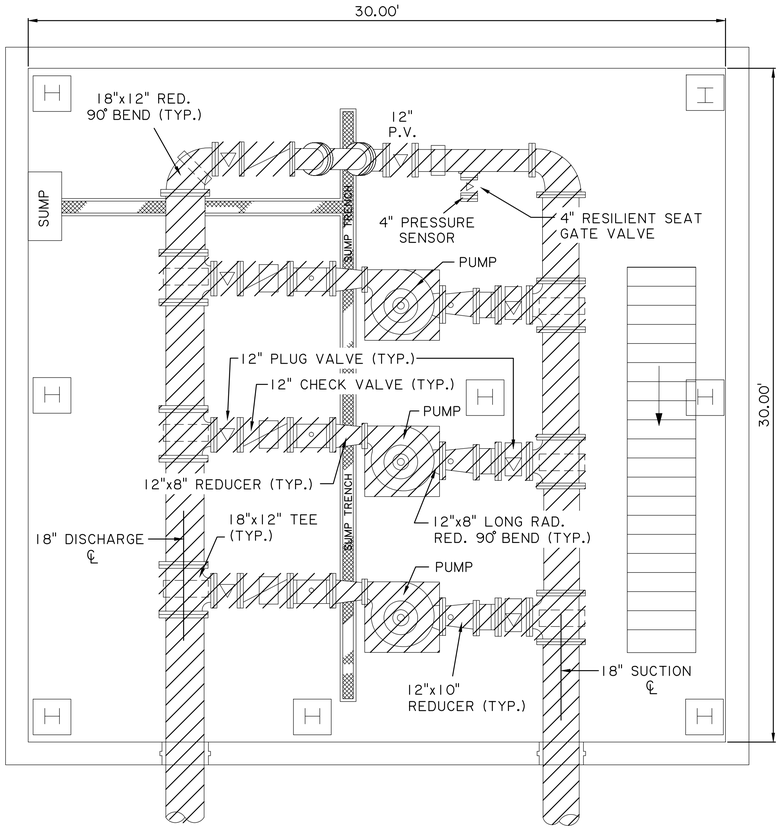

EXISTING P.S. 513

N.T.S.

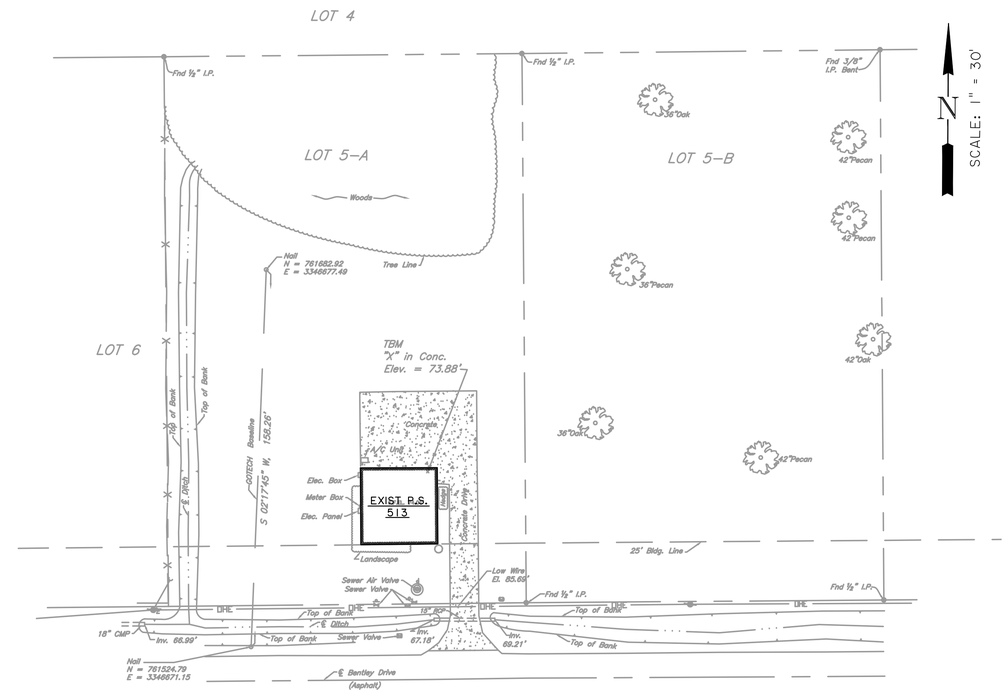

SITE PLAN

CONTRACTOR SHALL REMOVE AND DISPOSE THE PUMP STATION STRUCTURE (ROOF, WALLS, STIARS, TOP SLAB, FLOORS, ETC.) TO A MIN. DEPTH OF THREE (3) FEET BELOW EXIST. GRADE.

LEGEND:

REMOVE AND DISPOSE OF, AND/OR SALVAGE

SALVAGE AND DEMOLITION NOTES:

1. PRIOR TO ANY STUCTURAL DEMOLITION WORK, ALL PUMPS, MOTORS, SHAFTS, VALVES, PIPING, MOTOR CONTROLS AND ELECTRICAL EQUIPMENT, ETC. SHALL BE CAREFULLY REMOVED.
2. ALL OTHER ITEMS OF WORK TO BE REMOVED, DEMOLISHED AND DISPOSED OF SHALL BE PERFORMED IN ACCORDANCE WITH SECTION 820 OF THE SPECIAL PROVISIONS.
3. THE EXISTING PUMP STATION SHALL BE DEMOLISHED TO A POINT AT LEAST THREE (3) FEET BELOW EXISTING GRADE. THE BAESMENT SHALL THEN BE BACKFILLED AND COMPACTED FULL DEPTH WITH FLOWABLE FILL. THE TOP THREE (3) FEET SHALL BE BACKFILLED WITH AN APPROVED EARTHERN/TOP SOIL MIXTURE.
4. SURVEY THE EXISTING ELECTRICAL SYSTEMS AND EQUIPMENT IDENTIFIED FOR REMOVAL WITH REPRESENTATIVES FROM CITY/PARISH DPW PRIOR TO PERFORMING ANY DEMOLITION WORK. IDENTIFY ALL EQUIPMENT TO BE REMOVED WITH TAGS OR PAINT.
5. REMOVE ELECTRICAL WORK ASSOCIATED WITH EQUIPMENT SCHEDULED FOR REMOVAL.
6. COORDINATE ELECTRICAL POWER DISCONNECTION TO THE ELECTRICAL SYSTEMS AND METERING EQUIPMENT WITH ENTERGY.

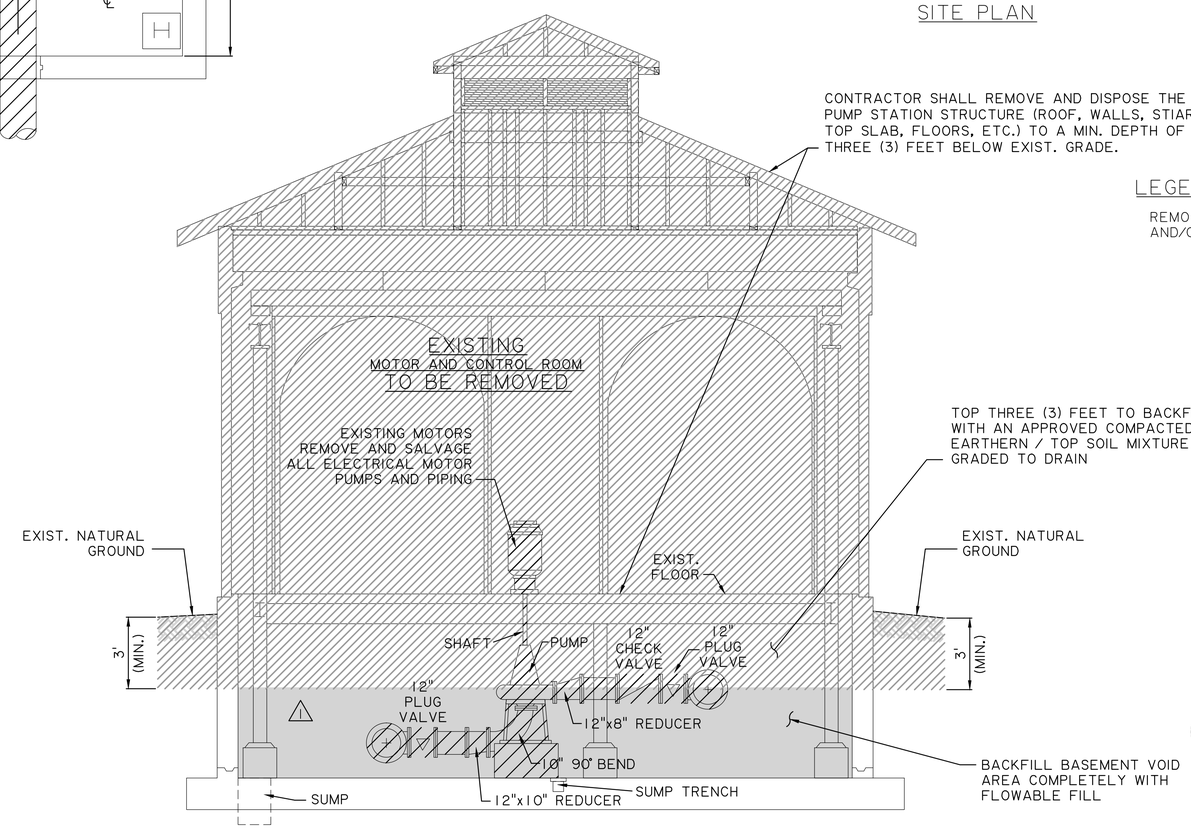

ELEVATION

N.T.S.

STATE OF LOUISIANA
JEROME M. KLIER
Reg. No. 11591
REGISTERED PROFESSIONAL ENGINEER IN CIVIL ENGINEERING
4-13-2016

SHT.	513-C06R
PARISH	EAST BATON ROUGE
CITY	BATON ROUGE
PROJECT	11-PS-MS-0035
DESIGNED J. KLIER	
CHECKED J. RICHARDSON	
DETAILED D. SMITH	
CHECKED D. ROSHTO	
DATE MARCH 2016	
SHEET	

NO.	DATE	REVISION DESCRIPTION	BY
1	6/24/16	GEN. PLAN REV. PER ADDENDUM NO. 3	J.M.K.

MULTIPLE PUMP STATIONS HIGHWAY 61 – PLANK ROAD (AREA NFW-C-0009)

DEMOLITION PLAN
PUMP STATION NO. 513

GEC Gulf Engineers & Consultants

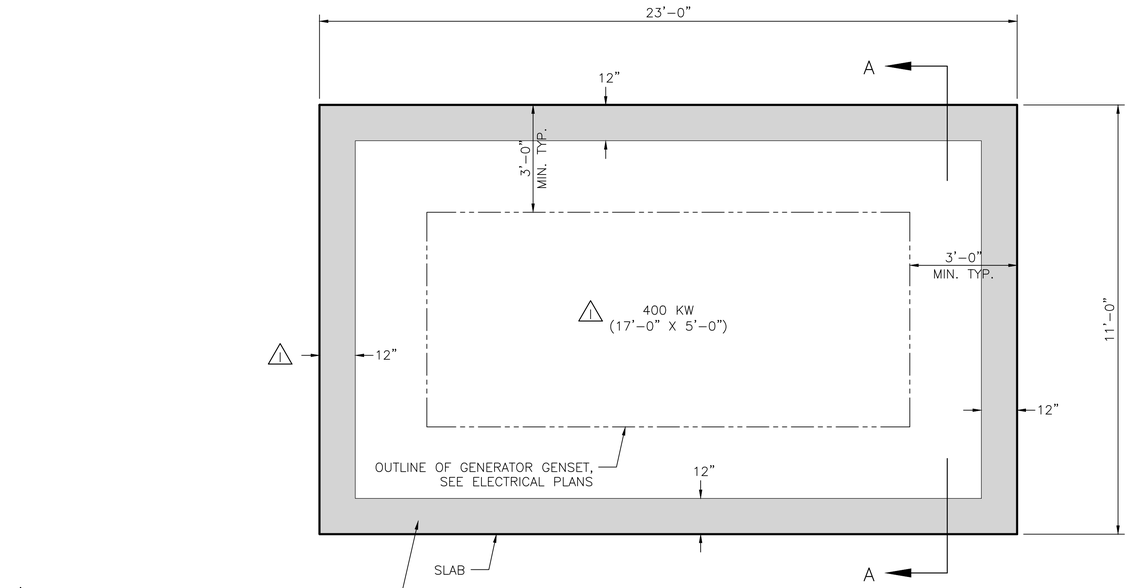

PAINT 12" WIDE TOP BAND AND FACE OF SLAB EDGE WITH SAFETY YELLOW, SEE PROTECTIVE COATING NOTE NO. 5, SEE SHEET NO. G-07R.

GENERATOR SLAB PLAN

SCALE: N.T.S.

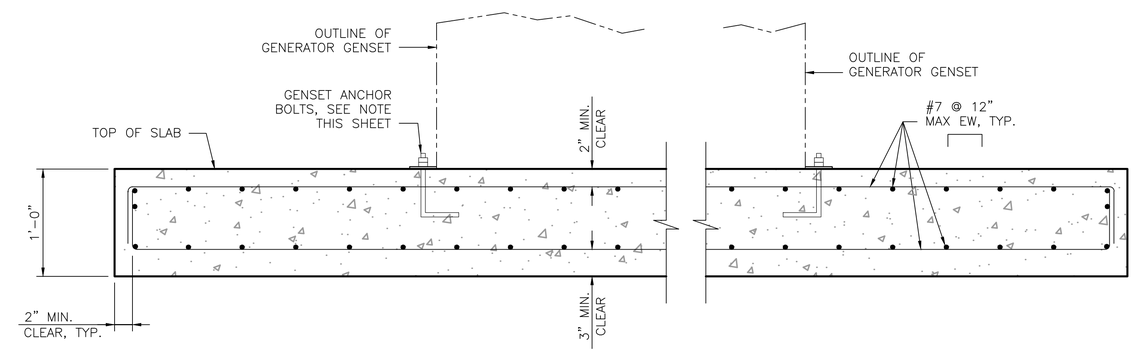

SECTION A-A

SCALE: N.T.S.

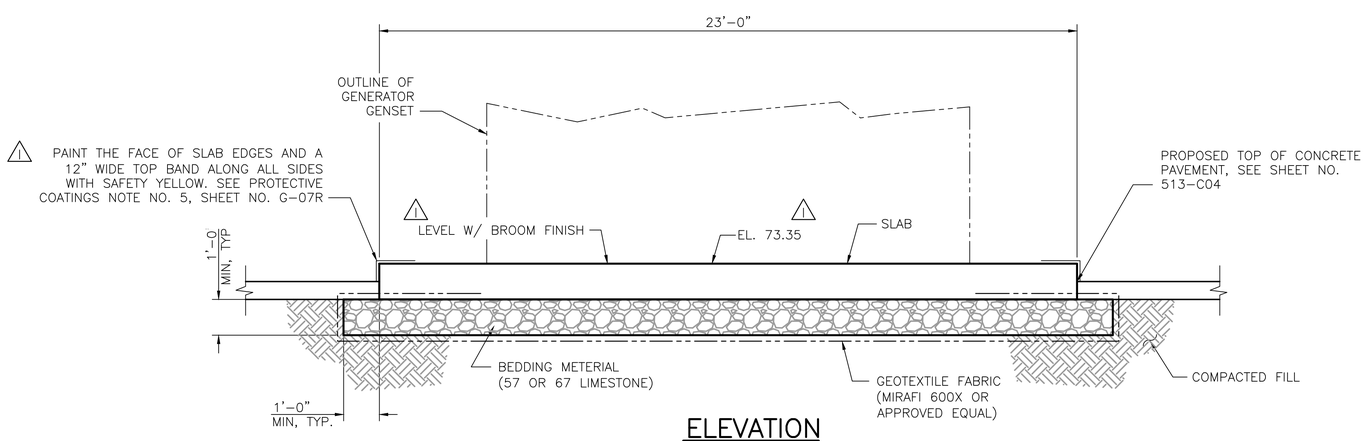

ELEVATION

SCALE: N.T.S.

STATE OF LOUISIANA
KEITH J. REBELLO
REG No. 24937
REGISTERED
PROFESSIONAL ENGINEER
ENGINEERING
April 13, 2016

NOTE:

REFER TO GENERATOR MANUFACTURER'S SPECIFICATIONS FOR GENSET ANCHOR BOLT SIZE AND LOCATIONS; SLAB CONDUIT PENETRATION LOCATIONS, AND OTHER MFG. DETAILS.

SHT. 513-S04R

PARISH: EAST BATON ROUGE
CITY: BATON ROUGE
PROJECT: 11-PS-MS-0035

DESIGNED: K. REBELLO
CHECKED: R. McLELLAN
DETAILED: D. SMITH
CHECKED: K. REBELLO
DATE: MARCH 2016
SHEET

NO.	DATE	REVISION DESCRIPTION	BY
1	6/24/16	GEN. PLAN REV. ADDED PER ADDENDUM NO. 3	J.M.K.

PUBLIC WORKS

MULTIPLE PUMP STATIONS HIGHWAY 61 – PLANK ROAD (AREA NFW-C-0009)

GENERATOR SLAB AND DETAILS
PUMP STATION NO. 513

GEC Gulf Engineers & Consultants

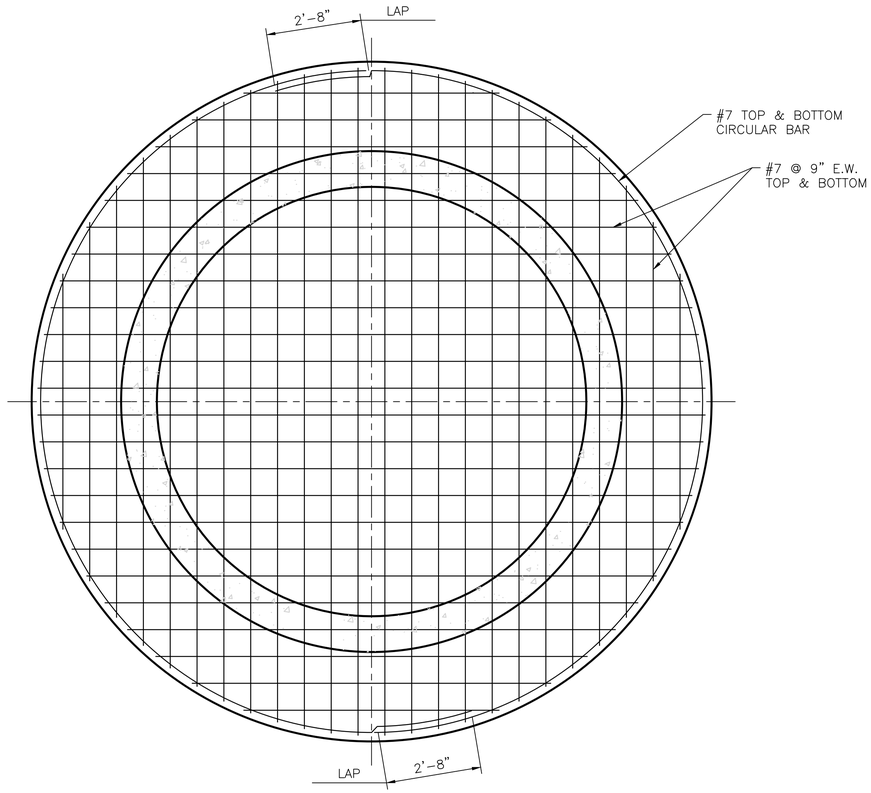

PUMP STATION WET WELL BASE SLAB
SCALE: 1/2" = 1'-0"

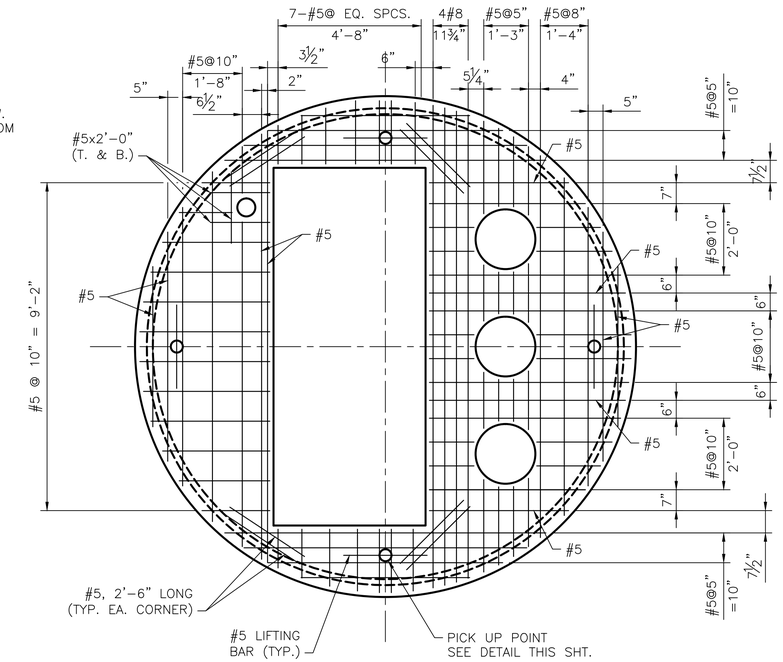

PUMP STATION WET WELL ROOF SLAB REINFORCING STEEL – TOP
SCALE: 1/2" = 1'-0"

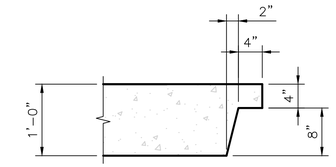

WET WELL ROOF SLAB TYP. EDGE DETAIL
SCALE: 1" = 1'-0"

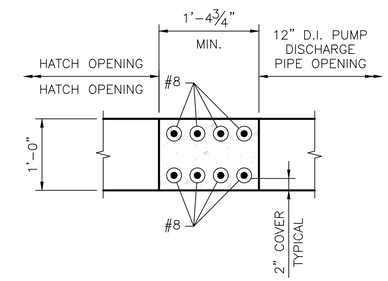

WET WELL ROOF SLAB HATCH EDGE DETAIL
SCALE: 1" = 1'-0"

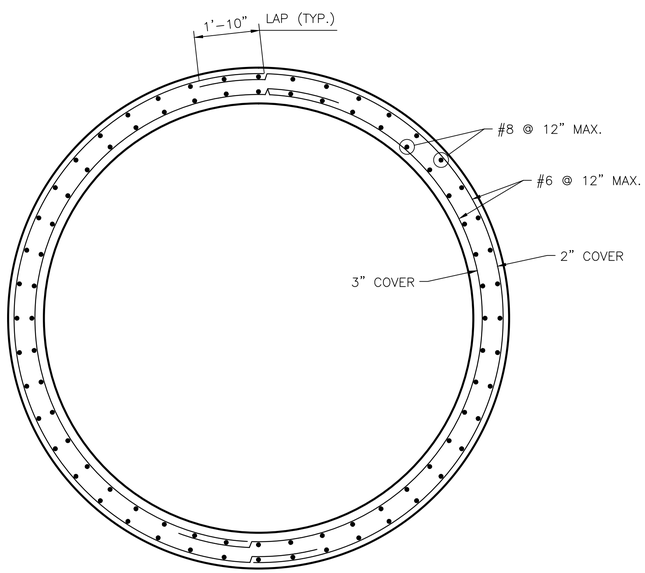

A 513-S01 SECTION
SCALE: 1/2" = 1'-0"

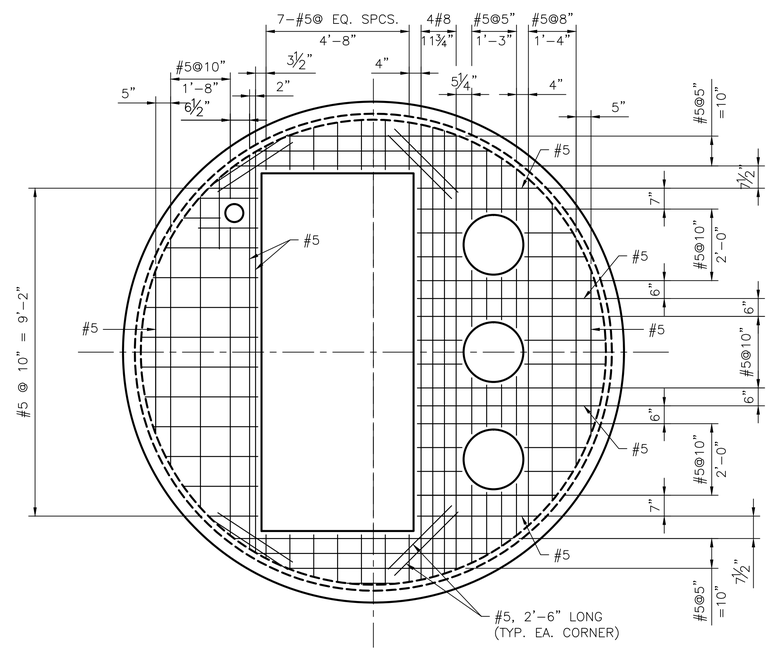

PUMP STATION WET WELL ROOF SLAB REINFORCING STEEL – BOTTOM
SCALE: 1/2" = 1'-0"

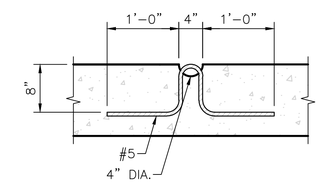

WET WELL ROOF SLAB TYP. LIFTING POINT
SCALE: 1" = 1'-0"

STATE OF LOUISIANA
KEITH J. REBELLO
REG No. 24937
REGISTERED
PROFESSIONAL ENGINEER
ENGINEERING
April 13, 2016

SHT.	513-S02
PARISH	EAST BATON ROUGE
CITY	BATON ROUGE
PROJECT	11-PS-MS-0035
DESIGNED	K. REBELLO
CHECKED	R. McLELLAN
DETAILED	D. INWOOD
CHECKED	K. REBELLO
DATE	MARCH 2016
SHEET	

NO.	DATE	REVISION DESCRIPTION	BY

MULTIPLE PUMP STATIONS HIGHWAY 61 – PLANK ROAD
(AREA NFW-C-0009)

WET WELL STRUCTURAL DETAILS
PUMP STATION NO. 513

GEC
Gulf Engineers & Consultants

PROJECT NO.	SHEET
11-PS-MS-0035	247

TABLE 1
(ALL DIMENSIONS ARE IN INCHES)

PAVEMENT THICKNESS "T"	DOWEL BARS ⊗			MINIMUM DEPTH OF JOINT	
	SIZE	LENGTH	SPACING	■ C.J. & D.J.	◪ L.J.
6	1	18	12	2	2
8	1 1/4	18	12	3	3
9	1 1/4	18	12	3	3 1/2
10	1 1/4	18	12	3 1/2	4

NOTES:

1. ALL JOINTS 10' MIN. SPACING 20' MAX. SPACING
2. MAXIMUM SPACING ON EJ OR EJ-1 WILL NOT EXCEED 500 FEET

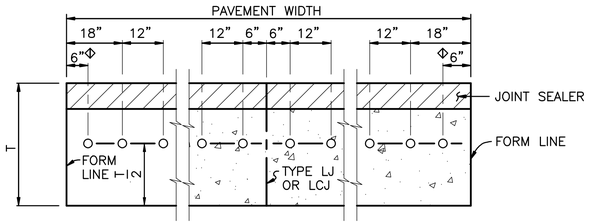

SECTION B-B
DOWEL BAR SPACING FOR TYPE DJ,CJ AND EJ JOINTS

Φ 9"-WHEN MECHANICAL PLACEMENT OF DOWEL BARS IS USED.

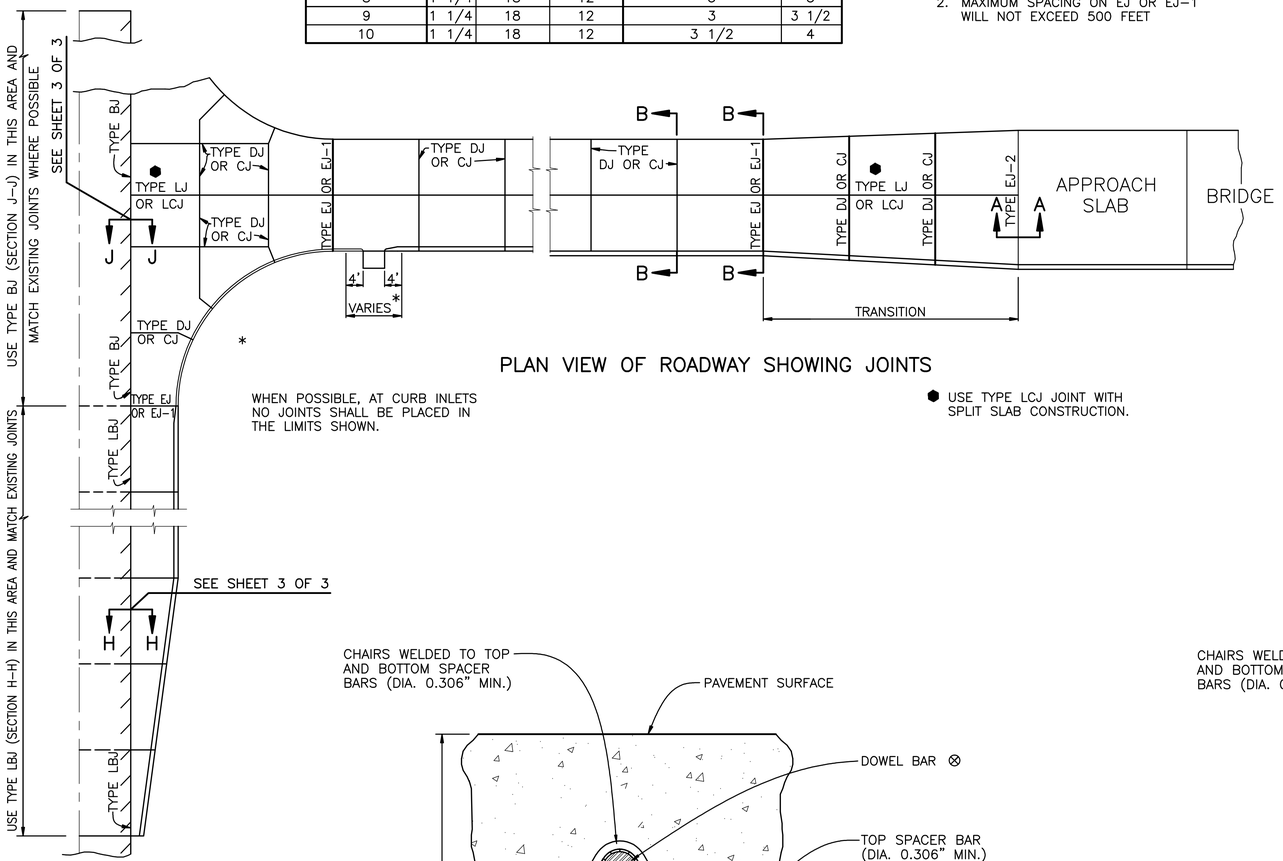

PLAN VIEW OF ROADWAY SHOWING JOINTS

WHEN POSSIBLE, AT CURB INLETS NO JOINTS SHALL BE PLACED IN THE LIMITS SHOWN.

⬢ USE TYPE LCJ JOINT WITH SPLIT SLAB CONSTRUCTION.

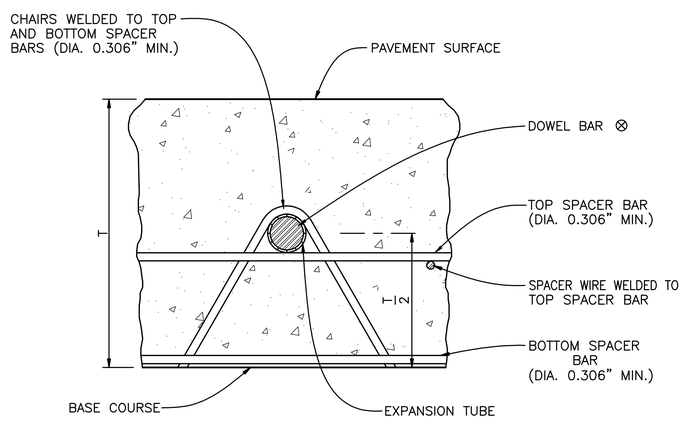

SECTION C-C
⊗ SEE TABLE 1

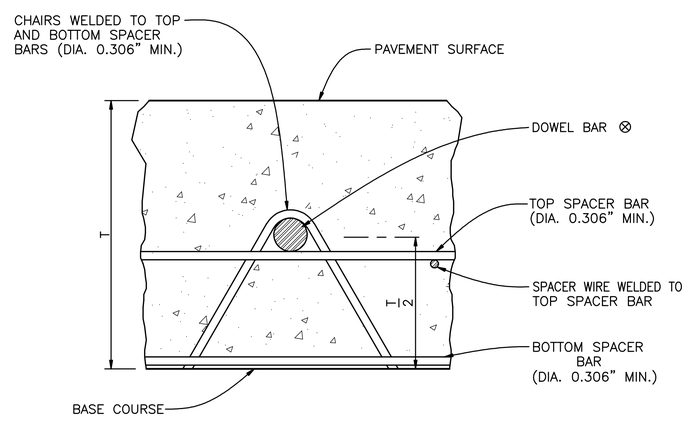

SECTION D-D
⊗ SEE TABLE 1

GENERAL NOTES

1. OUTSIDE PAVEMENT EDGES SHALL BE ROUNDED 1/4".
2. ON TYPE EJ JOINTS, EXPANSION TUBES AND STOPS SHALL BE PLACED ON ALTERNATE ENDS OF EACH DOWEL BARS. BARS SHALL BE SPOT WELDED ON ALTERNATE ENDS TO DOWEL BASKETS.
3. TYPE LJ JOINTS SHALL BE SAWED 1/8" WIDE AS SHOWN IN DETAIL "D" ON SHEET 2 TO THE DEPTH SHOWN IN TABLE 1. THEY SHALL BE CLEANED AND SEALED WITH A JOINT SEALER CONFORMING TO SUBSECTION 1007-2.
4. TYPE DJ AND CJ JOINTS SHALL BE TO THE DEPTH SHOWN IN TABLE 1. IF SAWED, THEY SHALL HAVE AN INITIAL CUT USING A 1/8" BLADE. OTHERWISE, JOINTS SHALL CONFORM TO DETAILS "B" AND "C" ON SHEET 2. THEY SHALL ALSO BE SAND BLASTED AND CLEANED PRIOR TO SEALING USING A JOINT SEALER CONFORMING TO SUBSECTION 1007-2.
5. TYPE DJ JOINTS MAY ALSO BE A COMBINATION JOINT FORMER/ SEALER AS SHOWN IN DETAIL "A" ON SHEET 2 CONFORMING TO SUBSECTION 1007-4.
6. TYPE EJ JOINTS SHALL BE FORMED FULL DEPTH, USING A WOOD FILLER, EXCEPT FOR THE TOP 1/2" WHICH SHALL BE A JOINT SEALER CONFORMING TO SUBSECTION 1007-2. THE WOOD FILLER SHALL CONFORM TO SUBSECTION 1007-1(b).
7. IN LIEU OF DOWEL BASKET, APPROVED VIBRATORY PLACEMENT OF DOWEL BARS AND TIE BARS WILL BE PERMITTED. DOWEL BASKETS SHALL BE SIMILAR TO ONES SHOWN, OR APPROVED EQUALS.
8. INSTALL GEOTEXTILE FABRIC UNDER CJ, DJ AND EJ TYPE JOINTS WHEN CONCRETE IS PLACED ON UNSTABILIZED OR UN-TREATED BASE COURSE WHEN DOWEL BARS ARE VIBRATED IN PLACE, THE GEOTEXTILE FABRIC SHALL BE ANCHORED TO BASE COURSE WITH PINS.
9. TRANSVERSE EXPANSION JOINTS SHALL NOT BE USED FOR CONSTRUCTION JOINTS.
10. TIE BARS SHALL NOT BE PLACED WITHIN 18" OF CONTRACTION (DUMMY) OR EXPANSION JOINTS.
11. TRANSVERSE EXPANSION JOINTS (TYPE EJ OR EJ-1) SHALL BE PLACED AT MAXIMUM 500-FOOT INTERVALS IN ADDITION TO BEING PLACED AT JUNCTIONS WITH OTHER CONCRETE PAVEMENTS.

STATE OF LOUISIANA
BRYAN K. HARMON
REG. No. 22595
REGISTERED PROFESSIONAL ENGINEER IN CIVIL ENGINEERING
January 18, 2008

DATE	DESCRIPTION REVISIONS	BY

STANDARD PLAN NO.	DATED	SHEET NO.
502-01	January 18, 2008	1 OF 3

CONCRETE PAVEMENT DETAILS

ENGINEERING DIVISION
DEPARTMENT OF PUBLIC WORKS
CITY OF BATON ROUGE & PARISH OF EAST BATON ROUGE

DESIGNED	DRAWN	CHECKED	APPROVED
R.E.E./N.A.R.	G. VANNICE	N.A.R./R.E.E.	B. HARMON

PROJECT NO.	SHEET
11-PS-MS-0035	248

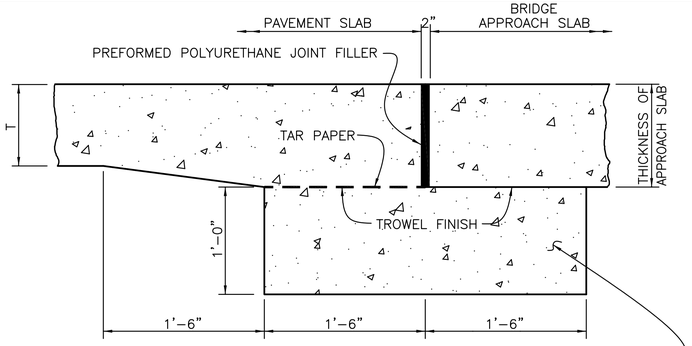

TYPE EJ-2
(TRANSVERSE EXPANSION JOINT)
SECTION A-A

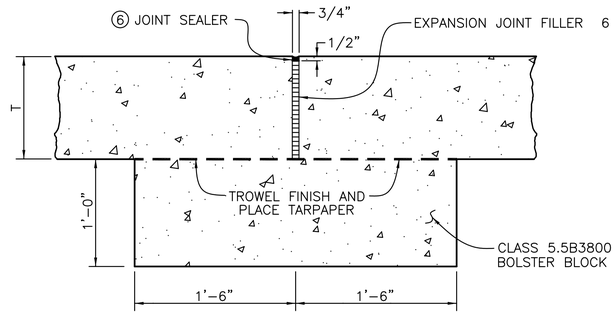

TYPE EJ-1
(TRANSVERSE EXPANSION JOINT)

COMBINATION JOINT FORMER / SEALER NOTES:

1. AFTER PAVEMENT HAS BEEN FINISHED AND WHILE CONCRETE IS STILL PLASTIC, GROOVES SHALL BE CUT INTO PAVEMENT AT PROPER LOCATION AND DEPTH. INSTALL SEALINSERT FLUSH WITH FINISHED SURFACE.
2. IMMEDIATELY CONSOLIDATE CONCRETE ON BOTH SIDES OF SEALINSERT WITH AN APPROVED MECHANICAL VIBRATOR.
3. AFTER FINAL FINISH BUT BEFORE CONCRETE HAS TAKEN ITS INITIAL SET, JOINT EDGES SHALL BE ROUNDED TO RADIUS SHOWN.
4. TOP CAP SHALL REMAIN IN PLACE UNTIL FINAL CLEAN-UP HAS BEEN COMPLETED.
5. SEALINSERTS SHALL BE CUT AND INSTALLED TO BE CONTINUOUS ACROSS THE FULL WIDTH OF SLAB, UNLESS FIELD SPLICING IS APPROVED BY THE ENGINEER. FIELD SPLICES SHALL BE SEALED WITH A POURED OR EXTRUDED JOINT SEALANT CONFORMING TO SUBSECTION 1007-2.
6. AT THE INTERSECTION OF TYPE LJ AND DJ JOINTS USING A COMBINATION JOINT FORMER / SEALER OR SPLIT SLAB CONSTRUCTION, THE GAP SHALL BE FILLED WITH A POURED OR EXTRUDED JOINT SEALANT CONFORMING TO SUBSECTION 1007-2.

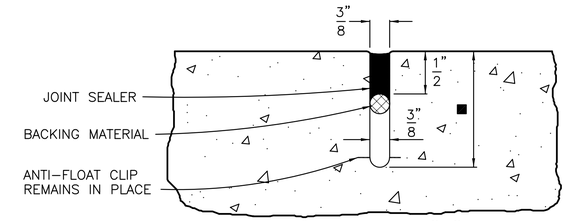

DETAIL "B"
POURED JOINT (FORMED) TYPE DJ OR CJ
■ SEE TABLE 1 ON SHEET 1

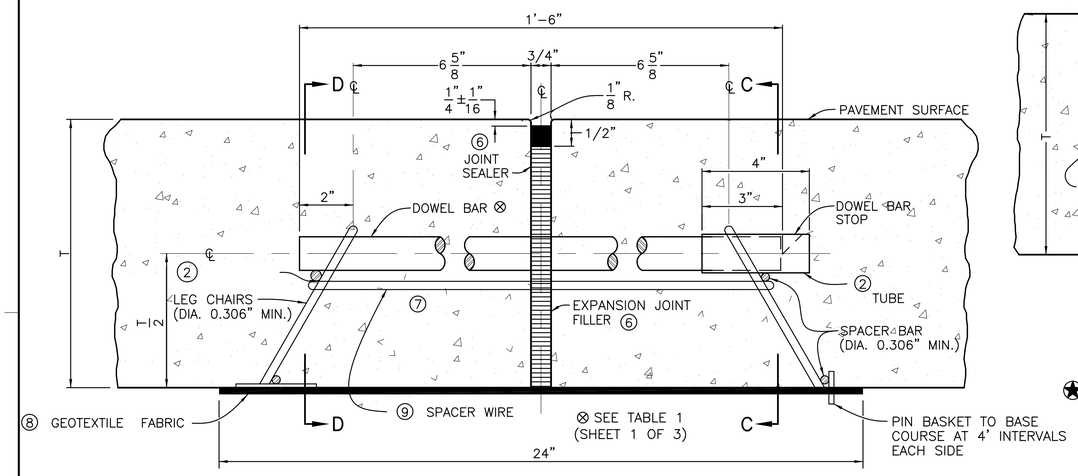

TYPE EJ
(TRANSVERSE EXPANSION JOINT)
AT CONTRACTOR'S OPTION, TYPE EJ-1 JOINT MAY BE USED IN LIEU OF TYPE EJ JOINT.

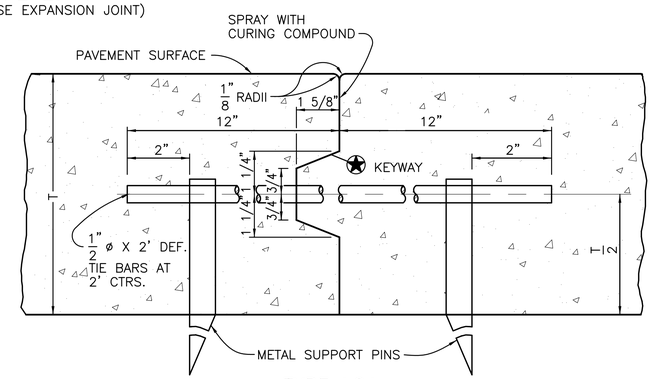

TYPE LCJ
(LONGITUDINAL CONSTRUCTION JOINT)
(SPLIT SLAB CONSTRUCTION)

★ IN LIEU OF KEYWAY, ONE OF THE FOLLOWING OPTIONS WILL BE ALLOWED:

a.) INSTALL TIE BARS OF THE SIZE SHOWN ABOVE AT 1/2 SPACING.

b.) INSTALL TIE BARS 1/4" LARGER THAN THE TIE BAR DIAMETER SHOWN ABOVE AT SAME SPACING.

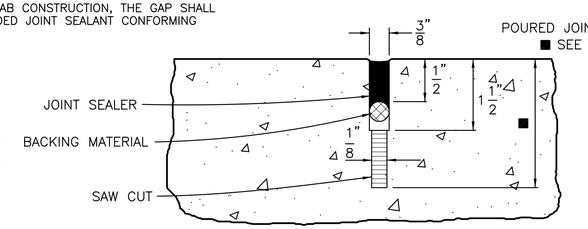

DETAIL "C"
POURED JOINT (SAWED) TYPE DJ OR CJ
■ SEE TABLE 1 ON SHEET 1

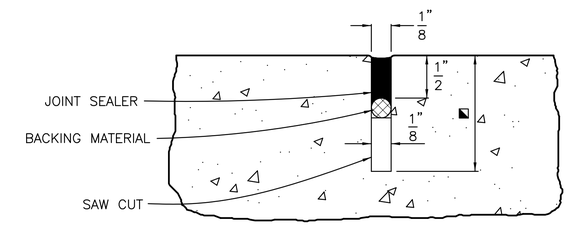

DETAIL "D"
POURED JOINT (SAWED)
TYPE LJ
◪ SEE TABLE 1 ON SHEET 1.

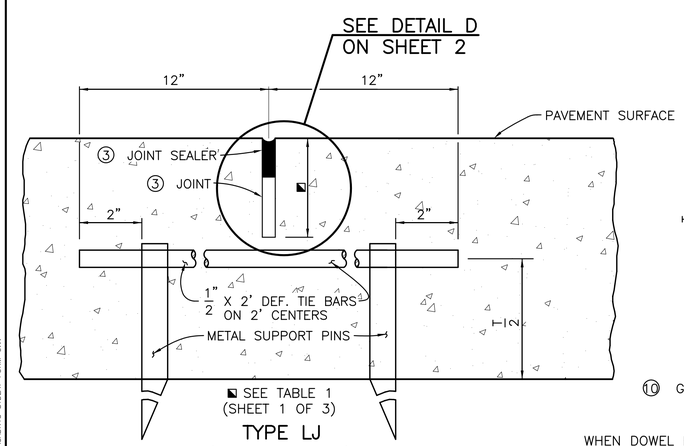

TYPE LJ
(LONGITUDINAL JOINT)
(REQUIRED WHEN PAVEMENT WIDTH EXCEEDS 15')

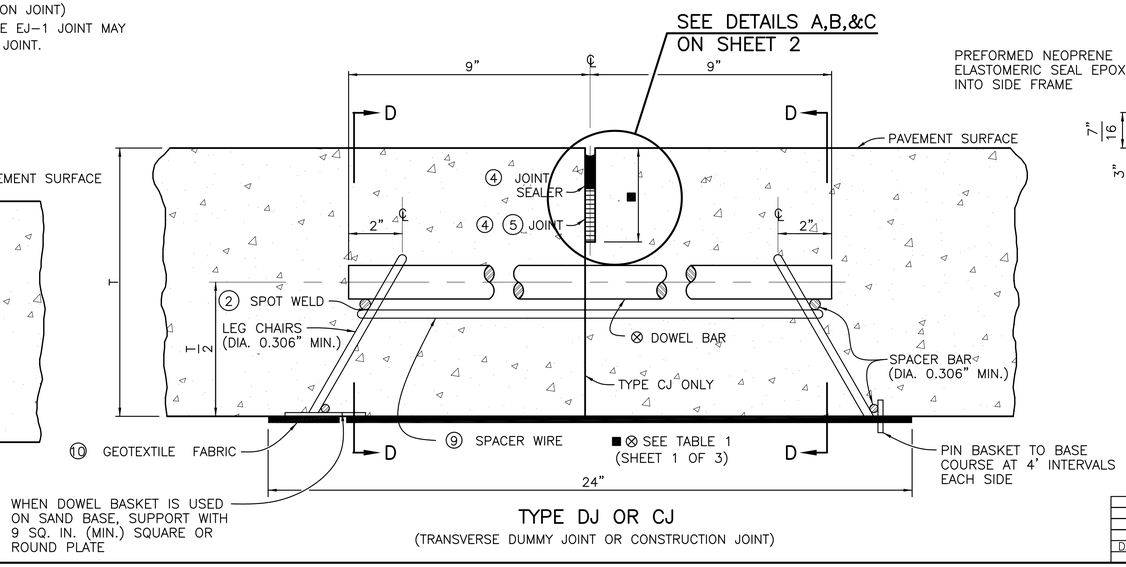

WHEN DOWEL BASKET IS USED ON SAND BASE, SUPPORT WITH 9 SQ. IN. (MIN.) SQUARE OR ROUND PLATE

TYPE DJ OR CJ
(TRANSVERSE DUMMY JOINT OR CONSTRUCTION JOINT)

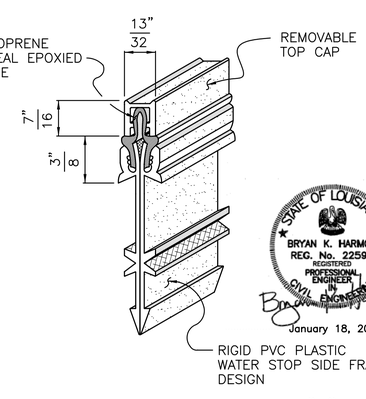

SEALINSERT DETAIL "A"

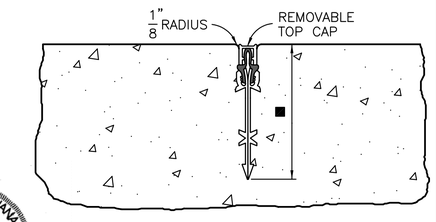

DETAIL "A"
COMBINATION JOINT FORMER / SEALER
■ SEE TABLE 1 ON SHEET 1

STATE OF LOUISIANA
BRYAN K. HARMON
REG. No. 22595
REGISTERED PROFESSIONAL ENGINEER IN CIVIL ENGINEERING
January 18, 2008

DATE	DESCRIPTION REVISIONS	BY

STANDARD PLAN NO.	DATED	SHEET NO.
502-01	January 18, 2008	2 OF 3

CONCRETE PAVEMENT DETAILS

ENGINEERING DIVISION
DEPARTMENT OF PUBLIC WORKS
CITY OF BATON ROUGE & PARISH OF EAST BATON ROUGE

DESIGNED	DRAWN	CHECKED	APPROVED
R.E.E./N.A.R.	G. VANNICE	N.A.R./R.E.E.	B. HARMON

ENGINEERING ACADR13 STDLAY FORM G.V.

PROJECT NO.	SHEET
11-PS-MS-0035	249

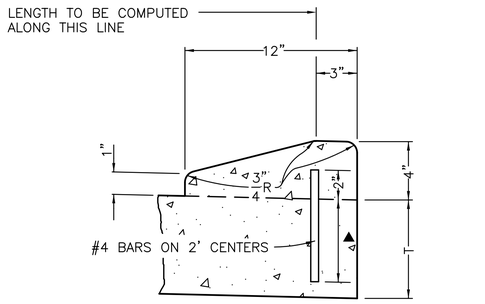

(MOUNTABLE TYPE) ▲ 4" FOR 6" PAVEMENT
6" FOR 8" TO 10" PAVEMENT

INTEGRAL CONCRETE CURB

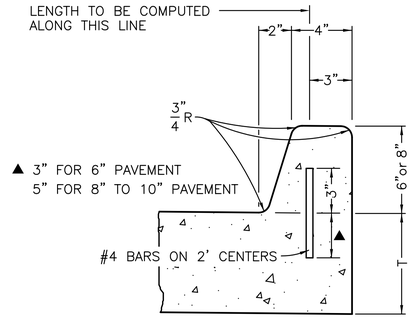

(BARRIER TYPE)

INTEGRAL CONCRETE CURB

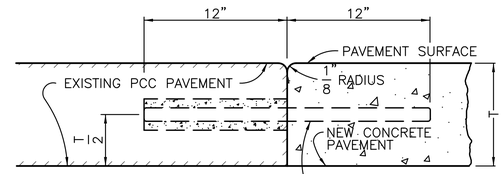

1/2"x 2' DEF. TIE BARS ON 2' CENTERS SHALL BE INSTALLED IN THE EXISTING PAVEMENT BY DRILLING 5/8" DIA. HOLES TO A DEPTH OF 12". HOLES SHALL BE FILLED IN ACCORDANCE WITH SUBSECTION 502-5(c).

TYPE LBJ

(LONGITUDINAL BUTT JOINT)

SECTION H-H

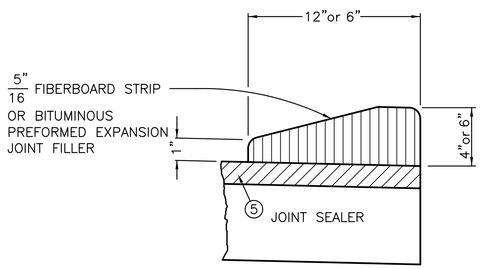

JOINT FILLER FOR INTEGRAL CONCRETE CURB

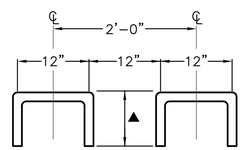

BAR DETAIL

SHOWING DIMENSIONS AND SPACING OF #4 DEF. REIN. STEEL BARS FOR CONC. CURB

▲ 6" FOR 6" PAVEMENT
8" FOR 8" TO 10" PAVEMENT

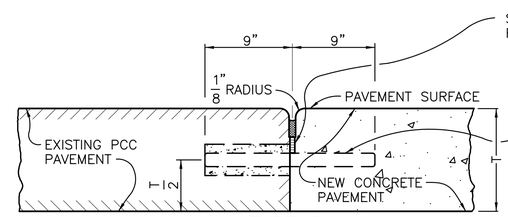

SEE DETAILS A,B, & C ON SHEET 2 FOR REQUIRED JOINT SEAL DETAIL.

⊗ DOWEL BARS OF THE SIZE, LENGTH AND SPACING SPECIFIED IN TABLE 1 (SHEET 1 OF 3) SHALL BE PLACED IN EXISTING PAVEMENT BY DRILLING HOLES 1/8" LARGER THAN THE BAR DIAMETER TO A DEPTH OF 1/2 THE BAR LENGTH AND FILLING HOLES IN ACCORDANCE WITH SUBSECTION 502-5(g).

TYPE BJ

(TRANSVERSE BUTT JOINT)

SECTION J-J

⊗ SEE TABLE 1 ON SHEET 1

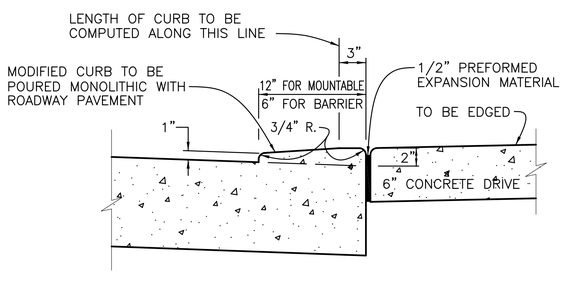

CONSTRUCTION JOINT AT CONCRETE DRIVES

STATE OF LOUISIANA
BRYAN K. HARMON
REG. No. 22595
REGISTERED PROFESSIONAL ENGINEER IN CIVIL ENGINEERING

January 18, 2008

STANDARD PLAN NO.	DATED	SHEET NO.
502-01	January 18, 2008	3 OF 3

CONCRETE PAVEMENT

DETAILS

ENGINEERING DIVISION
DEPARTMENT OF PUBLIC WORKS
CITY OF BATON ROUGE & PARISH OF EAST BATON ROUGE

DATE	DESCRIPTION	BY
	REVISIONS	

DESIGNED	DRAWN	CHECKED	APPROVED
R.E.E./N.A.R.	G. VANNICE	N.A.R./R.E.E.	B. HARMON

502-01

ENGINEERING ACADR13 STDLAY FORM G.V.

PROJECT NO.	SHEET
11-PS-MS-0035	250

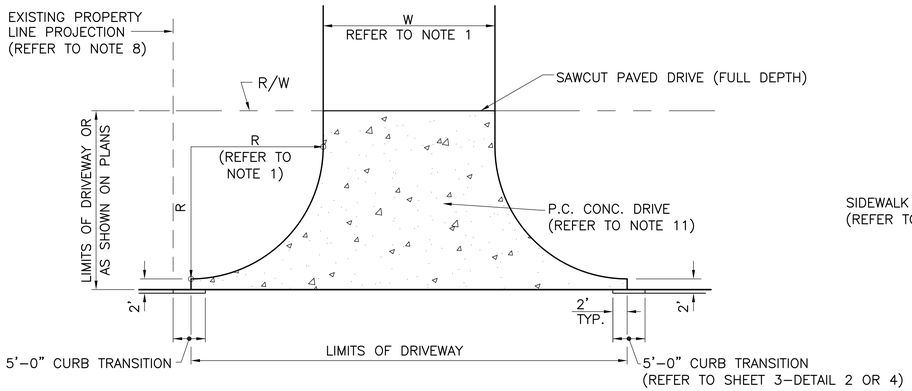

COMMERCIAL DRIVE – TYPE 1
SINGLE NON-CURBED
NO SIDEWALK
N.T.S.

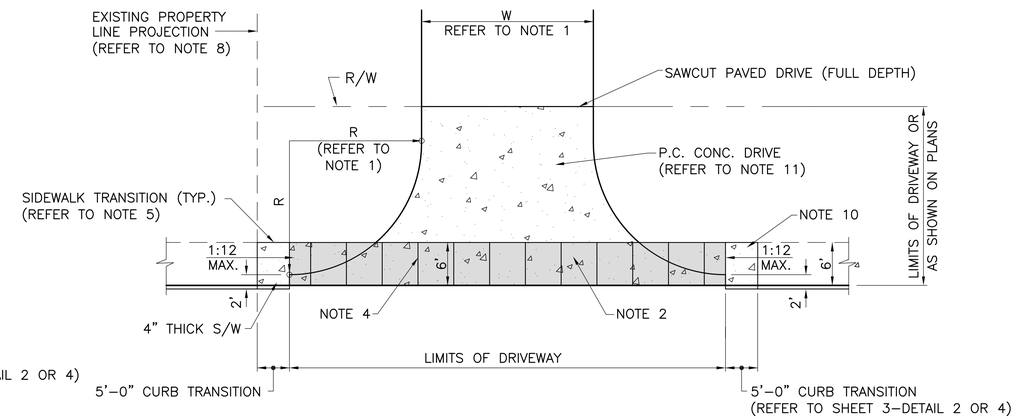

COMMERCIAL DRIVE – TYPE 2
SINGLE NON-CURBED
WITH SIDEWALK ADJACENT TO CURB
N.T.S.

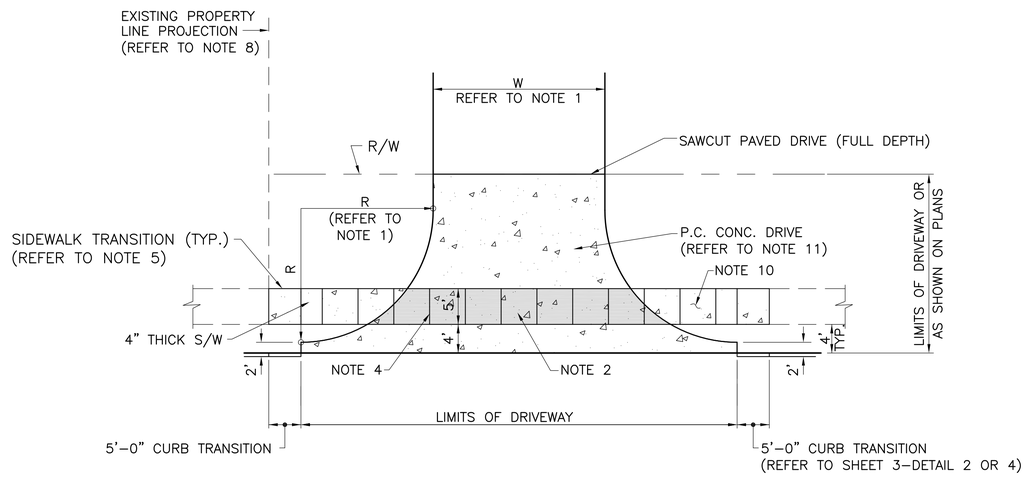

COMMERCIAL DRIVE – TYPE 3
SINGLE NON-CURBED
WITH OFFSET SIDEWALK
N.T.S.

APRIL 16, 2009

NOTES:

1. DRIVEWAY GEOMETRY SHOWN SHALL APPLY FOR BOTH NEW STREET CONSTRUCTION AND MODIFICATIONS TO EXISTING STREETS. R AND W – REFER TO CONSTRUCTION PLAN FOR SPECIFIC DIMENSIONS WHEN PROVIDED, OTHERWISE REFER TO 907-DG.
2. SIDEWALK THICKNESS SHALL MATCH DRIVEWAY THICKNESS AS SHOWN OR AS DIRECTED THE PROJECT ENGINEER.
3. CONSTRUCTION OR KEYWAY JOINT REQ'D WHEN DRIVE DIMENSIONS EXCEED 16' IN EITHER DIRECTION. LOCATION OF JOINTS SHALL BE COORDINATED WITH THE PROJECT ENGINEER.
4. WITHIN THE DRIVEWAY LIMITS, SIDEWALK AREA SHALL HAVE SCORED JOINTS PER STANDARD PLANS AND SPECIFICATIONS. SIDEWALK EXPANSION AND CONSTRUCTION JOINT LOCATIONS SHALL BE PER 907-01.
5. REFER TO STD. PLAN 907-01 FOR SIDEWALK RAMPS. SIDEWALK TRANSITION SHALL NOT EXCEED 1:12 SLOPE.
6. MAXIMUM CHANGE IN GRADES IS 12% FOR A CREST AND 11% AT SAGS WITHOUT VERTICAL CURVES. MAXIMUM GRADE CHANGES SHOULD BE AT LEAST 10' APART. MAXIMUM GRADE TYPICALLY SHALL NOT EXCEED 20%.
7. REFER TO STD. PLAN 502-01 FOR CURB DETAILS AND STD. PLAN 907-02 FOR COMBINATION CURB AND GUTTER DETAILS.
8. DRIVEWAY SHALL NOT EXTEND BEYOND THE ADJACENT PROPERTY LINE PROJECTION.
9. STREET TYPES ARE AS DEFINED BY THE TRAFFIC ENGINEER.
10. NEW SIDEWALKS SHALL BE TRANSITIONED TO MATCH THE EXISTING SIDEWALK AS DIRECTED BY THE PROJECT ENGINEER.
11. DRIVEWAY THICKNESS SHALL BE AS SHOWN ON THE CONSTRUCTION PLANS OR AS DIRECTED BY THE PROJECT ENGINEER. MINIMUM COMMERCIAL DRIVEWAY THICKNESS IS 6 INCHES.
12. REFER TO SHEET 3 FOR TYPICAL PROFILES AND DETAILS.

LEGEND

SIDEWALK AREA WITHIN DRIVEWAY
(PAID AS DRIVEWAY)
REFER TO NOTES 2 AND 4

DATE	DESCRIPTION	BY
	REVISIONS	

STANDARD PLAN NO.	DATED	SHEET NO.
907-03	APRIL 16, 2009	1 OF 3

COMMERCIAL DRIVES
GEOMETRIC DETAILS

ENGINEERING DIVISION
DEPARTMENT OF PUBLIC WORKS
CITY OF BATON ROUGE & PARISH OF EAST BATON ROUGE

DESIGNED	DRAWN	CHECKED	APPROVED
GLP	GLP	GLP	B. HARMON

907-03

ENGINEERING AUTODESK LAND DESKTOP STDLAY FORM G.V.

PROJECT NO.	SHEET
11-PS-MS-0035	231

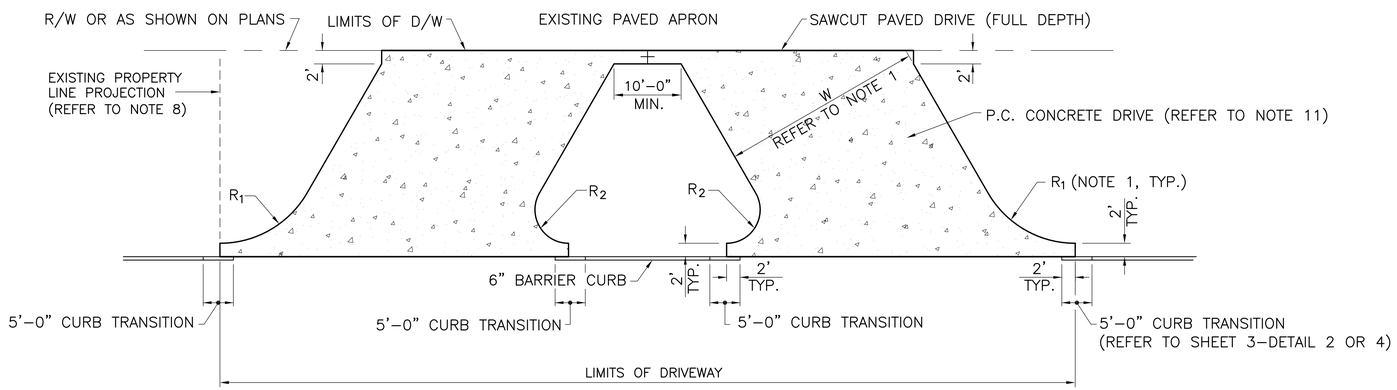

COMMERCIAL DRIVE – TYPE 4
DOUBLED SKEWED NON CURBED
NO SIDEWALK
N.T.S.

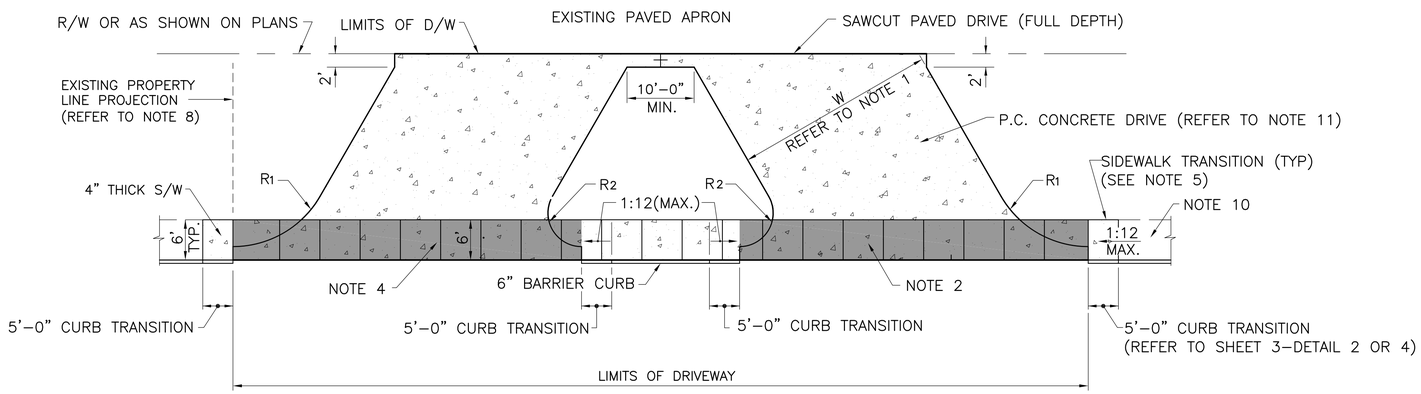

COMMERCIAL DRIVE – TYPE 5
DOUBLED SKEWED NON CURBED
SIDEWALK ADJACENT TO CURB
N.T.S.

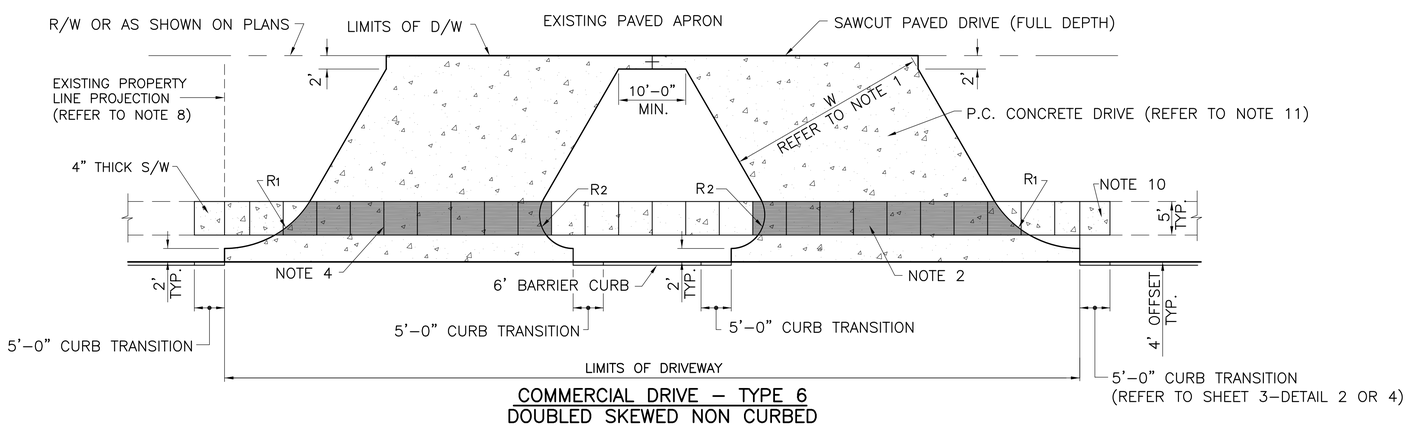

COMMERCIAL DRIVE – TYPE 6
DOUBLED SKEWED NON CURBED
WITH OFFSET SIDEWALK
N.T.S.

NOTES:

1. DRIVEWAY GEOMETRY SHOWN SHALL APPLY FOR BOTH NEW STREET CONSTRUCTION AND MODIFICATIONS TO EXISTING STREETS. R_1, R_2 AND W – REFER TO CONSTRUCTION PLAN FOR SPECIFIC DIMENSIONS WHEN PROVIDED, OTHERWISE REFER TO 907-DG.
2. SIDEWALK THICKNESS SHALL MATCH DRIVEWAY THICKNESS AS SHOWN OR AS DIRECTED THE PROJECT ENGINEER.
3. CONSTRUCTION OR KEYWAY JOINT REQ'D WHEN DRIVE DIMENSIONS EXCEED 16' IN EITHER DIRECTION. LOCATION OF JOINTS SHALL BE COORDINATED WITH THE PROJECT ENGINEER.
4. WITHIN THE DRIVEWAY LIMITS, SIDEWALK AREA SHALL HAVE SCORED JOINTS PER STANDARD PLANS AND SPECIFICATIONS. SIDEWALK EXPANSION AND CONSTRUCTION JOINT LOCATIONS SHALL BE PER 907-01.
5. REFER TO STD. PLAN 907-01 FOR SIDEWALK RAMPS. SIDEWALK TRANSITION SHALL NOT EXCEED 1:12 SLOPE.
6. MAXIMUM CHANGE IN GRADES IS 12% FOR A CREST AND 11% AT SAGS WITHOUT VERTICAL CURVES. MAXIMUM GRADE CHANGES SHOULD BE AT LEAST 10' APART. MAXIMUM GRADE TYPICALLY SHALL NOT EXCEED 20%.
7. REFER TO STD. PLAN 502-01 FOR CURB DETAILS AND STD. PLAN 907-02 FOR COMBINATION CURB AND GUTTER DETAILS.
8. DRIVEWAY SHALL NOT EXTEND BEYOND THE ADJACENT PROPERTY LINE PROJECTION.
9. STREET TYPES ARE AS DEFINED BY THE TRAFFIC ENGINEER.
10. NEW SIDEWALKS SHALL BE TRANSITIONED TO MATCH THE EXISTING SIDEWALK AS DIRECTED BY THE PROJECT ENGINEER.
11. DRIVEWAY THICKNESS SHALL BE AS SHOWN ON THE CONSTRUCTION PLANS OR AS DIRECTED BY THE PROJECT ENGINEER. MINIMUM COMMERCIAL DRIVEWAY THICKNESS IS 6 INCHES.
12. REFER TO SHEET 3 FOR CONSTRUCTION DETAILS.

STATE OF LOUISIANA
BRYAN K. HARMON
REG. No. 22595
REGISTERED PROFESSIONAL ENGINEER IN CIVIL ENGINEERING

APRIL 16, 2009

LEGEND
SIDEWALK AREA WITHIN DRIVEWAY (PAID AS DRIVEWAY) (REFER TO NOTES 2 AND 4)

DATE	DESCRIPTION	BY
	REVISIONS	

STANDARD PLAN NO.	DATED	SHEET NO.
907-03	APRIL 16, 2009	2 OF 3

COMMERCIAL DRIVES
GEOMETRIC DETAILS DOUBLED SKEWED LAYOUT

ENGINEERING DIVISION
DEPARTMENT OF PUBLIC WORKS
CITY OF BATON ROUGE & PARISH OF EAST BATON ROUGE

DESIGNED	DRAWN	CHECKED	APPROVED
GLP	GLP	GLP	B. HARMON

907-03

ENGINEERING AUTODESK LAND DESKTOP STDLAY FORM G.V.

907-03_2of3.dwg

PROJECT NO.	SHEET
11-PS-MS-0035	252

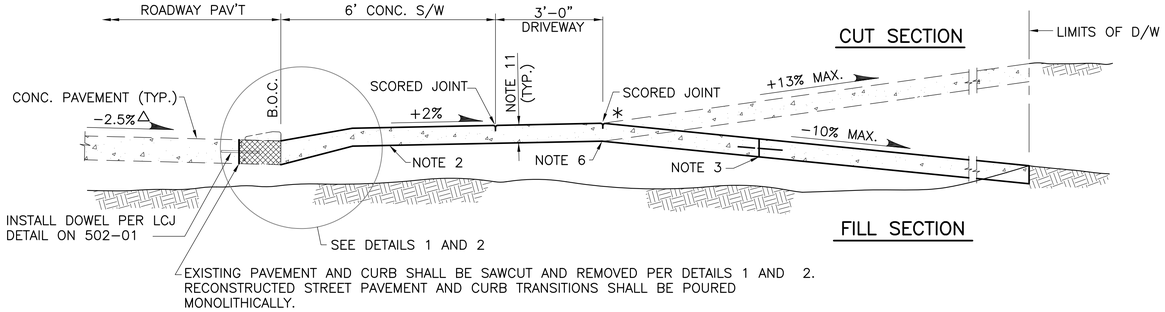

△ SLOPES SHOWN ARE FOR NORMAL CROWN ROADWAY SECTION

□ 2'-0" DRIVEWAY TRANSITION, NOT SUBJECT TO SAG CRITERIA

∗ A +0.33' VERTICAL CLEARANCE IS REQUIRED FROM THE GUTTERLINE TO THE LOCATION SHOWN.

⊙ PROFILE SIMILAR FOR 5' SIDEWALK WITH 4' OFFSET.

TYPICAL DRIVEWAY PROFILE 1
CONSTRUCTION ON EXISTING STREET
(SHOWN WITH 6 FOOT SIDEWALK ADJACENT TO CURB)⊙

REFER TO SHEET 1 FOR NOTES

N.T.S.

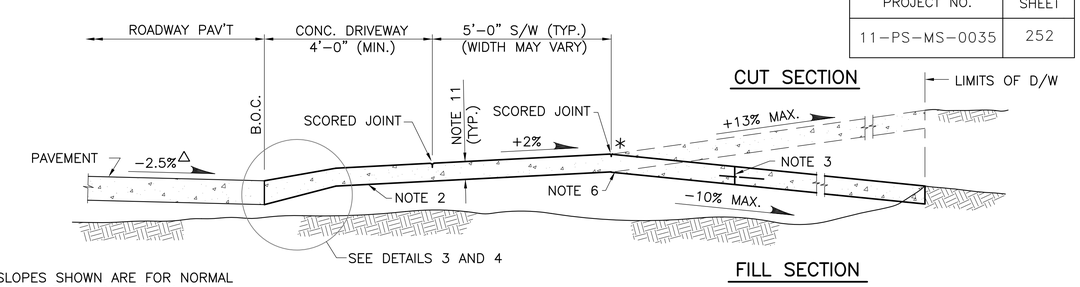

△ SLOPES SHOWN ARE FOR NORMAL CROWN ROADWAY SECTION

□ 2'-0" DRIVEWAY TRANSITION, NOT SUBJECT TO SAG CRITERIA

∗ A +0.33' VERTICAL CLEARANCE IS REQUIRED FROM THE GUTTERLINE TO THE LOCATION SHOWN.

⊙ PROFILE SIMILAR FOR 6' SIDEWALK ADJACENT TO CURB.

TYPICAL DRIVEWAY PROFILE 2
NEW STREET CONSTRUCTION
(SHOWN WITH 5 FOOT SIDEWALK OFFSET FROM CURB)⊙

REFER TO SHEET 1 FOR NOTES

N.T.S.

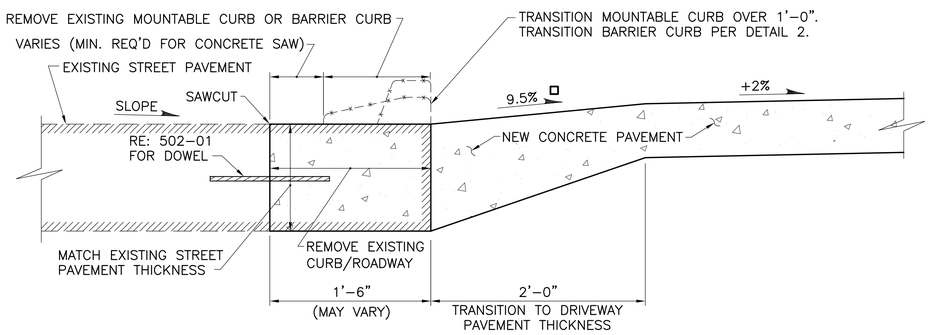

DETAIL 1
DRIVEWAY CONNECTION

N.T.S.

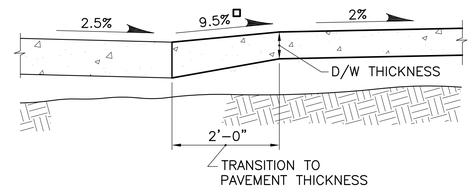

DETAIL 3
DRIVEWAY CONNECTION

N.T.S.

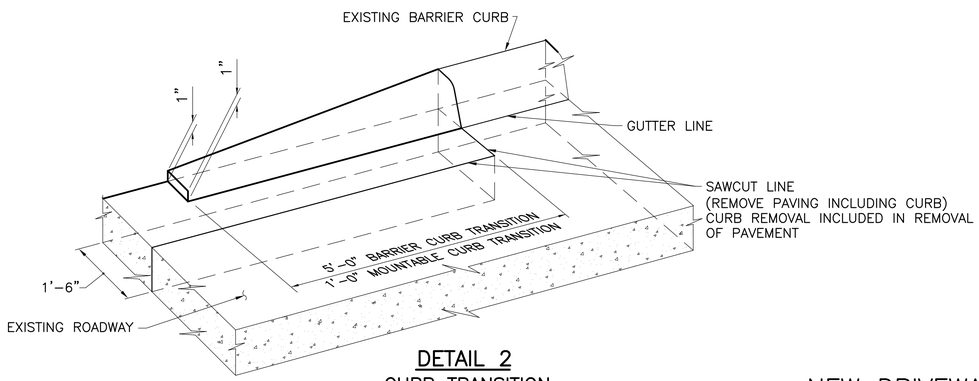

DETAIL 2
CURB TRANSITION

(TRANSITION OF BARRIER CURB SHOWN. TRANSITION MOUNTABLE CURB OVER 1'-0".)

N. T. S.

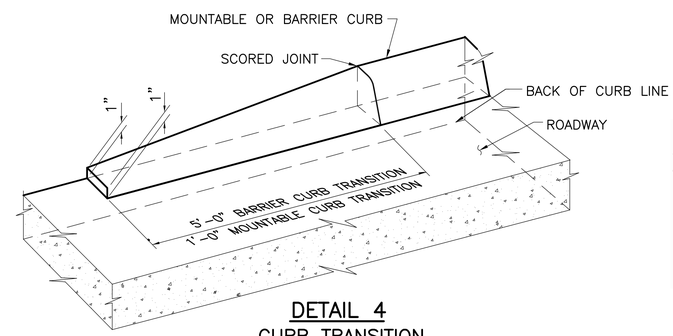

DETAIL 4
CURB TRANSITION

(TRANSITION OF BARRIER CURB SHOWN. TRANSITION MOUNTABLE CURB OVER 1'-0".)

N. T. S.

STATE OF LOUISIANA
BRYAN K. HARMON
REG. No. 22595
REGISTERED PROFESSIONAL ENGINEER IN CIVIL ENGINEERING

APRIL 16, 2009

NEW DRIVEWAY PROFILES ON NEW OR EXISTING STREETS

N.T.S.

DATE	DESCRIPTION	BY
	REVISIONS	

STANDARD PLAN NO.	DATED	SHEET NO.
907-03	APRIL 16, 2009	3 OF 3

COMMERCIAL DRIVES

TYPICAL PROFILES AND DETAILS

ENGINEERING DIVISION
DEPARTMENT OF PUBLIC WORKS
CITY OF BATON ROUGE & PARISH OF EAST BATON ROUGE

DESIGNED	DRAWN	CHECKED	APPROVED
GLP	GLP	GLP	B. HARMON

907-03

ENGINEERING AUTODESK LAND DESKTOP STDLAY FORM G.V.